Canadian Scientific

The Future of Laboratory Design

Venturi High Performance Fume Hoods - Floor Mount

IN ASSOCIATION WITH KEWAUNEE

Need Assistance?

Scan the QR code or visit
canadianscientific.ca/contact-us
to connect with our team

SEFA

KEWAUNEE

Venturi Fume Hood Features

Light & Sash Stop Controller

General Features

- LED interior lighting with 15 intensity and 3 color settings
- Large viewing height
- Unparalleled containment
- Low Flow/High Performance
- Energy Efficient
- Venturi post design improves corner airflow
- Electromechanical sash stop integrated into sash track
  (mechanical sash stop on floor-mounted hoods)
- Flush airfoil for easy user access
- Easily removable, gasketed Access Panels
- Two GFCI protected duplex receptacles in each corner post
- Room for five service fittings per side post
- Sash handle notched at each end for cord pass-through

Venturi Port & Notched Sash Handle

Belt Driven Sash & Pulley System

- Low maintenance, dual shaft, belt and gear driven, sash system utilizing lineal bearings in the sash track for smooth operation

- Tested to 300,000 cycles

KEWAUNEE

Part Number Explanation

Venturi Fume Hood Catalog Number Explanation

Base Part Number — Styles — Options

V05G282472N-G1F1SKA1V...

Fume Hood Type

Bench Fume Hoods
V05 = Vertical Sash
V06 = Combination Sash
V07 = Horizontal Sash

V10 = Split Vertical Sash
V11 = Split Combo Sash

V15 = ADA Vertical Sash
V16 = ADA Combo Sash

V25 = LX Vertical Sash
V26 = LX Combo Sash

V30 = LX Split Vertical Sash
V36 = LX Split Combo Sash

V40 = Isotope - Vertical Sash
V45 = Perchloric Acid - Vertical Sash

Floor-Mounted Fume Hoods
V65 = Vertical Sash
V66 = Combination Sash
V67 = Horizontal Sash

Distillation Fume Hoods
V90 = Vertical Sash

Interior Liner Material

G = Kemglass (fiberglass reinforced polyester)
L = Type 316L Stainless Steel (18 ga)
S = Type 304L Stainless Steel (18 ga)
T = Phenolic Resin (¼")

Sash Opening Height

28 = Bench Hood
31 = Horizontal Sash Bench Hood
35 = LX Bench Hood
63 = Distillation Hood
64 = Floor-Mounted Hood
68 = Floor-Mounted Horizontal Sash

Options

See next page

Electrical Fixtures

See list below

Service Fitting Holes

Rod Controlled Needle Valves = **F1**
Rod Controlled Ball Valves = **F2**
Front Load Needle Valves = **F3**

Sash Glass Type

Laminated Safety Glass = **G1**
Tempered Glass = **G2**
Polycarbonate = **G3**

Sash Frame

Frameless = **N**
Powder Coated Steel = **M**
Type 304L Stainless Steel = **S**
V45 Hood Only Type 316L Stainless Steel = **L**

Hood Length

4' / 48" = **48**
5' / 60" = **60**
6' / 72" = **72**
8' / 96" = **96**
10' / 120" = **20**
12' / 144" = **44**

Hood Interior Depth

24" = **24**
30" = **30**
36" = **36**
48" = **48**

Electrical Fixtures:

...F1SKA1V...

Receptacle Color

Black = **K**
Ivory = **V**
White = **W**
Grey = **G**
Red = **R**

Receptacle Grade & Type

S = Specification Grade – 20 amp-120 VAC – GFCI
H = Hospital Grade – 20 Amp-120 VAC– GFCI

Part Number Explanation

TruView Teaching Hood Catalog Number Explanation

Base Part Number — Required Styles — Options

V50G2848SBN-G1F4SKSAA1V...

Hood Type

TruView Teaching Hoods
- **V50** = Vertical Sash
- **V51** = Combination Sash
- **V52** = ADA Vertical Sash
- **V53** = ADA Combination Sash
- **V55** = Double-Sided Vertical Sash
- **V56** = Double-Sided Combo Sash
- **V57** = Double-Sided ADA Vertical Sash
- **V58** = Double-Sided ADA Combo Sash

Liner Type

- **G** = Kemglass

Hood Length

- **48** = 4' / 48"
- **60** = 5' / 60"
- **72** = 6' / 72"
- **96** = 8' / 96"

Window Configuration

- **CB** = Glass Back Panel
- **SB** = Solid Back Panel

Options

See below

Hood Configuration

- Stand Alone = **SA**
- Left End of Run = **LE**
- Right End of Run = **RE**
- Add-on (Middle of Run) = **AD**

Electrical Fixtures

See previous page

Service Fitting Holes

- TruView WaterSaver = **F4**
- TruView ADA WaterSaver = **F5**

Sash Glass Type

- Laminated Safety Glass = **G1**
- Tempered Glass = **G2**

Sash Frame

- Frameless = **N**
- Powder Coated Steel = **M**
- Type 304L Stainless Steel = **S**

Options: Click here to see option explanations.

V50G2848SBN-G1F4SKSEA1V...

Airflow Modification
- V1 = VAV Bypass
- V2 = VAV Bypass & Control Cutout

Airflow Safety
- A1 = Air Alert 600 for Vertical Sash
- A2 = Air Alert 600 for Combo Sash
- A3 = Air Alert 300
- L = Sash Stop Label

Fittings & Fixtures
- K = Fan/Blower Switch
- P1 = Cord Port (one in each post)
- U/U2 = Pre-wired/UL Listed

Stainless Steel Parts
- C = Stainless Steel Duct Collar (Type 316)
- O = Stainless Steel Airfoil (Type 304)
- O2 = Stainless Steel Airfoil (Type 316)
- Q = Stainless Steel Sash Pull (Type 304)

Sash Operators
- R1 = Auto Sash Return
- R3 = Proximity Sash Operator

Miscellaneous Options
- D = Distillation Rack Preparation
- S = Safety Shield
- T = Tissue Screen
- W = Work Shelf Supports
- Z = Single Point Piping Preparation

KEWAUNEE

Guide to Fume Hood Selection

Introduction

Selection of the proper type of fume hood to use in a laboratory should be based upon two interrelated considerations:

1. The hood must allow the user to perform the work in a safe, efficient manner.
2. The need to reduce air conditioning cost.

The hood must be large enough to accommodate the required apparatus within the prescribed safe work area of the hood (6" behind the plane of the sash and 2" in front of the back baffle). The configuration of the hood should be such that apparatus can be moved in and out of the hood easily. The sash opening of the hood must allow sufficient access for safely manipulating the apparatus within the hood. The interior of the hood must resist the corrosive effects of chemicals. The hood understructure should provide for storage of the required chemicals and/or apparatus for the work being done in the hood.

The total operating cost of a hood is greatly affected by its exhaust air requirements. The annual cost of heating and cooling the air exhausted by the hood can be as high as the initial cost of the hood itself. Choosing the proper hood type, sash configuration, and ventilation system can significantly reduce these costs.

Low Exhaust Volume Hoods

Low Exhaust Volume (LEV) fume hoods are designed to have a lower exhaust requirement than a traditional fume hood of the same size running at 100 FPM with a fully opened sash by operating with a face velocity of 60 FPM or less through the same sash opening and offering containment levels equal to, or superior to, the traditional fume hood. LEV hoods are required by SEFA to be able to pass ASHRAE 110 with a performance rating equal to or better than 4.0 AM 0.05, and 4.0 AI/AU 0.10. LEV fume hoods offer a suite of new features not found on traditional fume hoods, such as innovative bypass designs, baffle conformations, and aerodynamic flush airfoils and radiused fascias. These fume hoods are designed to go anywhere a traditional fume hood might go. They are able to be incorporated into either Constant Air Volume (CAV) or Variable Air Volume (VAV) systems.

Dynamic Barrier Bypasses are designed for LEV fume hoods being used in a CAV system. In a CAV system the exhaust volume to the hood is always the same, so as the sash height increases or decreases, the velocity decreases or increases, respectively. This type of bypass has a dynamic slot that opens wider as the sash is closed. This works with constant volume fume hoods since it allows additional air to enter the bypass above the sash, otherwise there would be a much larger increase in velocity when the sash is fully closed. The design of the Dynamic Barrier Bypass directs the air entering the fume hood so that it sweeps down the back of the sash, providing an extra barrier of protection for the user.

Vertical Bypasses are designed for LEV fume hoods being used in a VAV system. VAV systems are designed to vary the fume hoods exhaust rate so when the sash is open, the face velocity is always the same and when the sash is closed, the exhaust rate decreases to a minimum value decided by the users EHS or Safety Management department based on ANSI/AIHA Z9.5. This type of bypass is designed to have a small opening that doesn't change size regardless of sash height with the bypass panel running parallel to the sash. This opening is required by the VAV system so that it can operate as designed.

Face Velocity

In a laboratory fume hood, the control of contaminants is achieved by drawing air through the face (sash) opening. The face velocity is defined as the average velocity of the air in this opening and is expressed in units of feet per minute (FPM).
The Occupational Safety and Health Administration (OSHA) in its Laboratory Standard does not specify a required fume hood face velocity. As a result, hood users must look to published guidelines for recommendations on proper face velocities. The most authoritative of these published guidelines is the ANSI/AIHA Z9.5 American National Standard for Laboratory Ventilation. This publication recommends using an average face velocity of between 60 and 120 feet per minute.

Newer technologies (like Kewaunee's Venturi series) have allowed face velocities below 60 FPM to show good containment. Part of the reasoning for these newer, lower face velocities is that the face velocity by itself does not define the protection level of a fume hood. There are other factors which are as important such as: the design of the hood, the location of the hood within the laboratory, the quality of the supply air distribution, and most importantly the work practices of the user. The ANSI/AIHA Z9.5 recommendation assumes that these factors have been optimized through proper design and work rules.

Where local and state codes require the use of a specific face velocity, these codes should be followed.

Baffle Design

Venturi fume hoods come with fixed slots in the rear baffles. The size of the slots are optimized to provide the best performance for general purpose use. The Venturi baffle technology works in both heavier-than-air and lighter-than-air applications. Therefore there is not a need for baffle adjustment.

For answers to frequently asked questions about Kewaunee fume hoods visit the Kewaunee website.

Guide to Fume Hood Selection (continued)

Configurations

Bench hoods are set on a worksurface approximately 36" above the floor and provide a convenient work area for the standing position.

Floor mounted hoods are used where taller apparatus is required or equipment is rolled into the hood.

Distillation hoods are used where taller apparatus is required and convenient access to the floor of the hood is needed.

ADA fume hoods are designed in accordance with the guidelines for the Americans with Disabilities Act with controls lowered to improve accessibility. These hoods are also used when a sitting position is desired for work at the hood. They provide the same size work area as the corresponding bench hoods.

Sash Arrangements

Vertical sash hoods provide the best horizontal and vertical access to the hood interior but they also have the highest exhaust requirements. The exhaust requirements can be reduced by using a sash stop, although, this restricts the vertical access into the work area. Split sash hoods can be used where two work areas are needed.

Auto-Return Vertical Sash hoods use a vertical sash that will automatically return to a pre-set position if released from a higher position. A full-open lock-out is provided for set-ups.

Horizontal sash hoods provide good access into the hood vertically and allow for lower exhaust requirements. These sashes do restrict the access across the hood for loading of wide equipment and apparatus. This limitation becomes less significant in larger hoods.

Combination vertical rising/horizontal sash hoods, as the name implies, provide the benefits of both the vertical and horizontal sash hoods. For normal operation the sash can be partially raised vertically, or the horizontal panels can be used. The sash can be fully opened vertically for loading equipment into the hood.

Special Purpose Fume Hoods

Isotope hoods are designed for use with radioactive materials. The Type 304L stainless steel cove corner seamless welded construction eases cleaning and decontamination.

Perchloric Acid hoods are required when this acid is heated above ambient temperature. The Type 316L stainless steel liner is fabricated to eliminate the possibility of formation of perchloric acid deposits. This hood includes a water wash down feature.

Liner Material

Kemglass and **Phenolic Resin** are general purpose liners with very good to excellent chemical resistance. **Stainless Steel** is usually used where cleanability and/or heat resistance are the prime requirements.

Phenolic Resin (T) liner is reinforced with cellulose fibers and is surfaced with white melamine material. The brown phenolic resin is visible at the edges of the sheet material.

Kemglass (G) is white fiberglass reinforced polyester sheet material.

Type 304L Stainless Steel (S) and **Type 316L Stainless Steel (L)** is 18 gauge stainless steel sheet with a No. 4 finish.

HOOD LINER CHARACTERISTICS

LINER MATERIAL	RESISTANCE TO HEAT	CHEMICAL RESISTANCE ACIDS	CHEMICAL RESISTANCE SOLVENTS	CLEANABILITY
Phenolic Resin	G	E	E	G
Kemglass	G	E	G	G
Stainless Steel	E	F	E	E

E = Excellent G = Good F = Fair P = Poor

Worktops

Epoxy Resin worktops are available in four colors, have excellent chemical resistance, and good heat resistance. They are the normal choice for general purpose hoods and highly corrosive applications.

Stainless Steel worktops are available in Types 304L and 316L. They are used where cleanability and heat resistance are important. Type 316 is preferred where improved chemical resistance is desired.

The worktop is specified by a separate part number for all hoods except Isotope and Perchloric Acid hoods.

For answers to frequently asked questions about Kewaunee fume hoods visit the Kewaunee website.

KEWAUNEE

V65 – Floor-Mounted Fume Hood

with Vertical Rising Sash

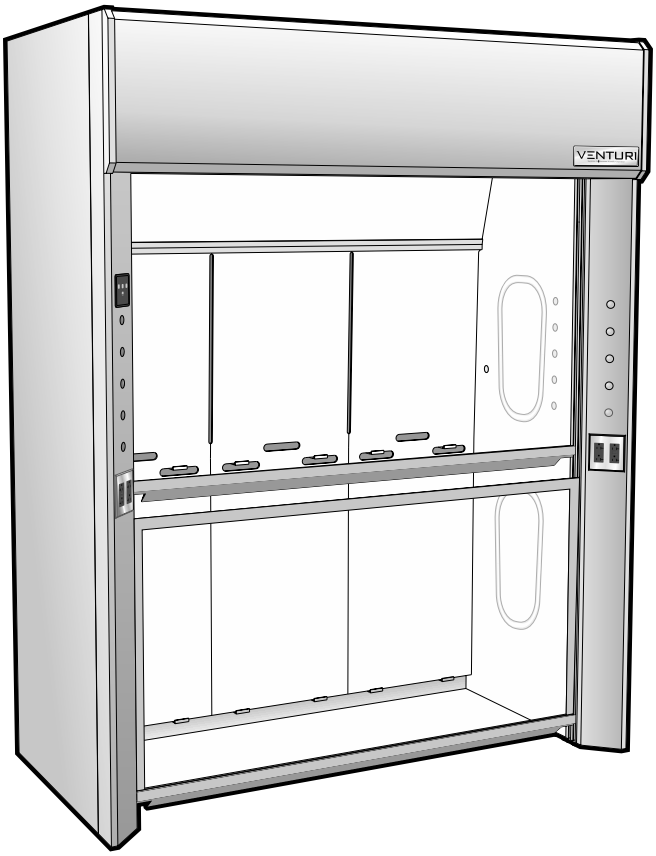

Accessories Included:	
4	120 VAC 20 amp GFCI* protected duplex receptacles ** when wired to a single circuit, as standard with Option U*
1	LED light fixture with illumination and color controller
1	Mechanical sash stop

Available Sizes:	part no. code
Sash Opening Height:	
64¼ inches / 1632mm	**64**
Inside Depth:	
24 inches / 610mm	**24**
30 inches / 762mm	**30**
36 inches / 914mm	**36**
48 inches / 1219mm	**48**
Overall Length:	
48 inches / 1219mm	**48**
60 inches / 1524mm	**60**
72 inches / 1829mm	**72**
96 inches / 2438mm	**96**

Available Liner Types:	part no. code
Kemglass Fiberglass reinforced polyester 1805 UL classified	**G**
Type 316L Stainless Steel 1805 UL classified	**L**
Type 304L Stainless Steel 1805 UL classified	**S**
Phenolic Resin	**T**

Available Sash Frames:	part no. code
Frameless ***Upper Sash Only***	**N**
Powder Coated Steel	**M**
Type 304L Stainless Steel	**S**

Additional Parts Required for a Complete Fume Hood Assembly	
Work Floor & Shelf	see tops
Ceiling Enclosure	see ceiling enclosures
Service Fittings	see service fittings

	Liner Type	Sash Height	Inside Depth	Overall Length	Sash Frame		Sash Glass	Fitting Holes	Electrical Fixture	Option Choices		
V65		**64**				**-**	**G**	**F**				**...**

Technical Information V65

Airflow (CFM) Requirements

Face Velocity	28" High Sash Opening								18" High Sash Opening							
	4'-0" / 48"		5'-0" / 60"		6'-0" / 72"		8'-0" / 96"		4'-0" / 48"		5'-0" / 60"		6'-0" / 72"		8'-0" / 96"	
	CFM	SP	CFM	SP	CFM	SP	CFM	SP	CFM	SP	CFM	SP	CFM	SP	CFM	SP
120 FPM	992	0.56	1297	0.70	1602	0.88	2212	0.61	667	0.26	872	0.33	1077	0.41	1487	0.28
100 FPM	827	0.39	1081	0.50	1335	0.62	1843	0.43	556	0.18	727	0.23	897	0.29	1239	0.20
80 FPM	661	0.26	865	0.32	1068	0.41	1475	0.28	445	0.12	581	0.15	718	0.19	991	0.13

Static pressures shown are for the pressure drop through the hoods only. The total pressure drop through the hood and the duct system must be calculated to select the proper exhaust fan.

ANSI Z9.5 Minimum Flow Rate

Inside Depth	150 Air Changes/Hour				375 Air Changes/Hour			
	4'-0" / 48"	5'-0" / 60"	6'-0" / 72"	8'-0" / 96"	4'-0" / 48"	5'-0" / 60"	6'-0" / 72"	8'-0" / 96"
24" deep	130 CFM	170 CFM	210 CFM	290 CFM	320 CFM	420 CFM	520 CFM	720 CFM
30" deep	160 CFM	210 CFM	260 CFM	350 CFM	390 CFM	510 CFM	630 CFM	870 CFM
36" deep	190 CFM	250 CFM	300 CFM	420 CFM	470 CFM	610 CFM	750 CFM	1030 CFM
48" deep	250 CFM	320 CFM	390 CFM	540 CFM	610 CFM	790 CFM	980 CFM	1350 CFM

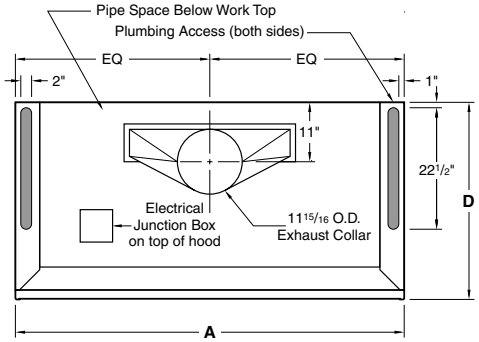

4'-5'-6' Rough-in

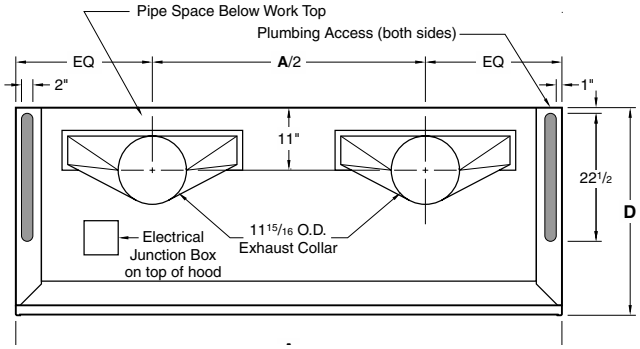

8' Rough-in

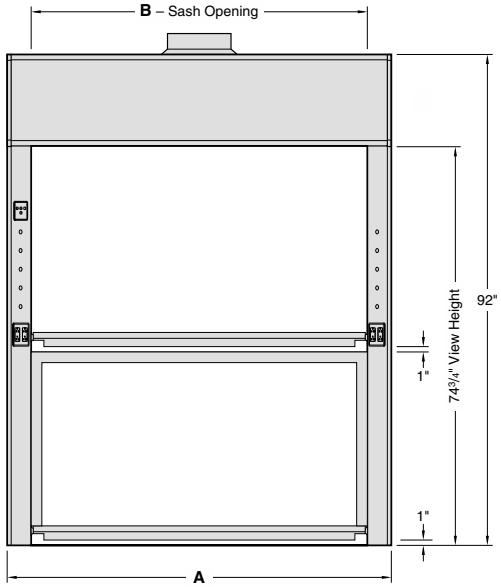

Elevation

Dimensions – Length				
A	48"	60"	72"	96"
B	39"	51"	63"	87"

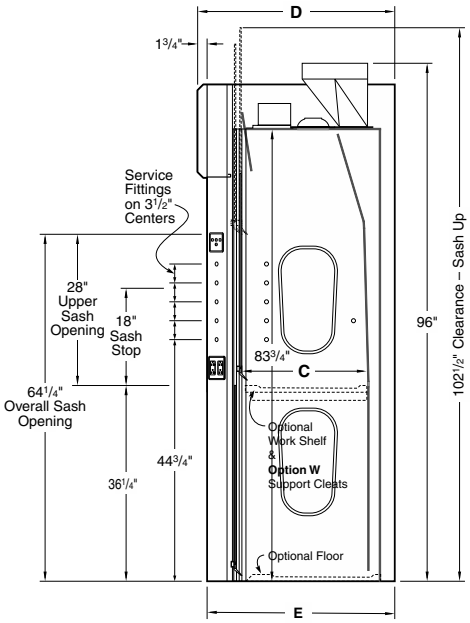

Vertical Section

Dimensions – Depth				
C	24"	30"	36"	48"
D	36½"	42½"	48½"	60½"
E	34¾"	40¾"	46¾"	58¾"

KEWAUNEE

V66 – Floor-Mounted Fume Hood

with Combination Vertical Rising/Horizontal Sash

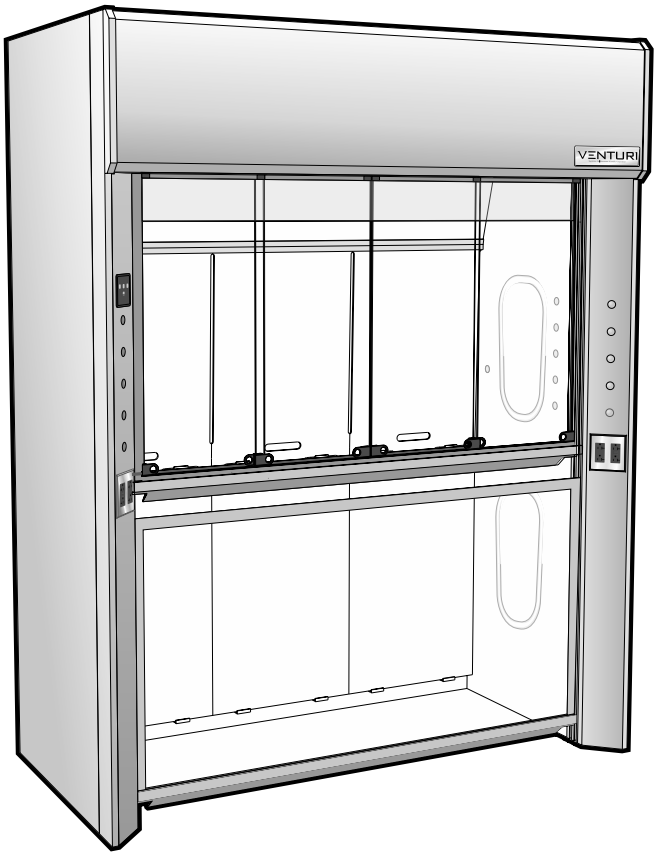

Accessories Included:	
4	120 VAC 20 amp GFCI* protected duplex receptacles ** when wired to a single circuit, as standard with Option U*
1	LED light fixture with illumination and color controller
1	Mechanical sash stop

Available Sizes:	part no. code
Sash Opening Height:	
64¼ inches / 1632mm	**64**
Inside Depth:	
24 inches / 610mm	**24**
30 inches / 762mm	**30**
36 inches / 914mm	**36**
48 inches / 1219mm	**48**
Overall Length:	
48 inches / 1219mm	**48**
60 inches / 1524mm	**60**
72 inches / 1829mm	**72**
96 inches / 2438mm	**96**

Available Liner Types:	part no. code
Kemglass Fiberglass reinforced polyester 1805 UL classified	**G**
Type 316L Stainless Steel 1805 UL classified	**L**
Type 304L Stainless Steel 1805 UL classified	**S**
Phenolic Resin	**T**

Available Sash Frames:	part no. code
Powder Coated Steel	**M**
Type 304L Stainless Steel	**S**

Additional Parts Required for a Complete Fume Hood Assembly	
Work Floor & Shelf	see tops
Ceiling Enclosure	see ceiling enclosures
Service Fittings	see service fittings

	Liner Type	Sash Height	Inside Depth	Overall Length	Sash Frame		Sash Glass	Fitting Holes	Electrical Fixture	Option Choices		
V66		**64**				**-**	**G**	**F**				**...**

Technical Information V66

Airflow (CFM) Requirements

Face Velocity	18" High Sash Opening								Sash Closed – Panels Full Open							
	4'-0" / 48"		5'-0" / 60"		6'-0" / 72"		8'-0" / 96"		4'-0" / 48"		5'-0" / 60"		6'-0" / 72"		8'-0" / 96"	
	CFM	SP	CFM	SP	CFM	SP	CFM	SP	CFM	SP	CFM	SP	CFM	SP	CFM	SP
120 FPM	667	0.26	872	0.33	1077	0.41	1487	0.28	536	0.17	716	0.23	896	0.29	1256	0.21
100 FPM	556	0.18	727	0.23	897	0.29	1239	0.20	447	0.12	597	0.16	747	0.21	1047	0.15
80 FPM	445	0.12	581	0.15	718	0.19	991	0.13	357	0.08	477	0.10	597	0.14	837	0.09

Static pressures shown are for the pressure drop through the hoods only. The total pressure drop through the hood and the duct system must be calculated to select the proper exhaust fan.

ANSI Z9.5 Minimum Flow Rate								
Inside Depth	150 Air Changes/Hour				375 Air Changes/Hour			
	4'-0" / 48"	5'-0" / 60"	6'-0" / 72"	8'-0" / 96"	4'-0" / 48"	5'-0" / 60"	6'-0" / 72"	8'-0" / 96"
24" deep	130 CFM	170 CFM	210 CFM	290 CFM	320 CFM	420 CFM	520 CFM	720 CFM
30" deep	160 CFM	210 CFM	260 CFM	350 CFM	390 CFM	510 CFM	630 CFM	870 CFM
36" deep	190 CFM	250 CFM	300 CFM	420 CFM	470 CFM	610 CFM	750 CFM	1030 CFM
48" deep	250 CFM	320 CFM	390 CFM	540 CFM	610 CFM	790 CFM	980 CFM	1350 CFM

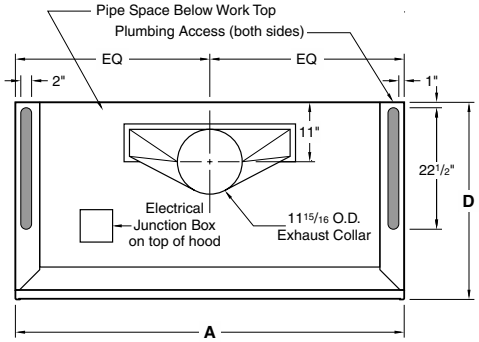

4'-5'-6' Rough-in

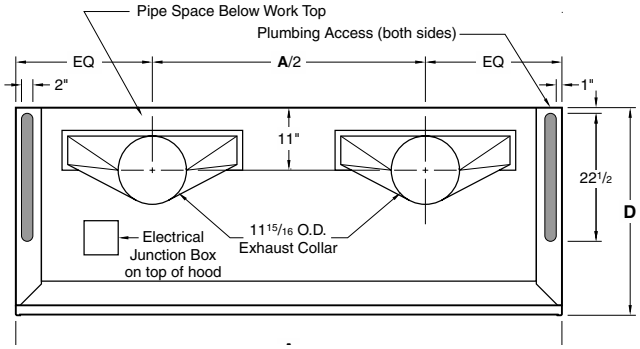

8' Rough-in

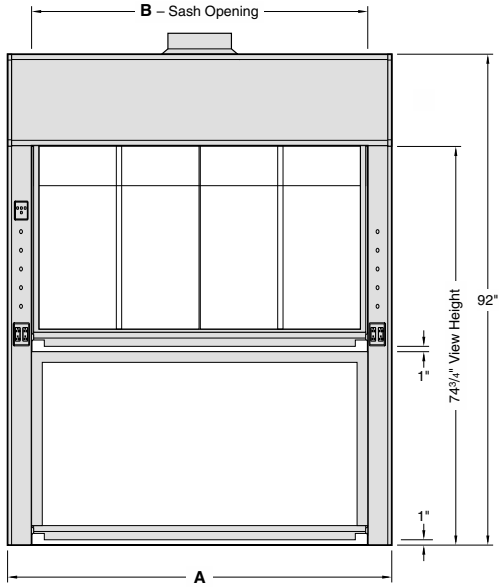

Elevation

Dimensions – Length				
A	48"	60"	72"	96"
B	39"	51"	63"	87"

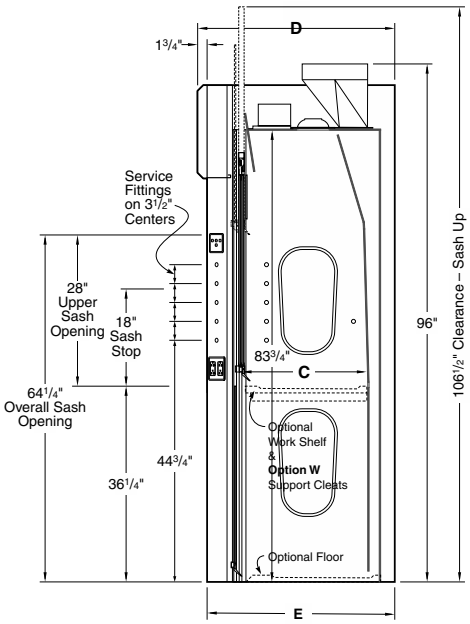

Vertical Section

Dimensions – Depth				
C	24"	30"	36"	48"
D	36½"	42½"	48½"	60½"
E	34¾"	40¾"	46¾"	58¾"

KEWAUNEE

V67 – Floor-Mounted Fume Hood

with Horizontal Sash

Accessories Included:	
4	120 VAC 20 amp GFCI* protected duplex receptacles ** when wired to a single circuit, as standard with Option U*
1	LED light fixture with illumination and color controller

Available Sizes:	part no. code
Sash Opening Height:	
68 inches / 1727mm	**68**
Inside Depth:	
24 inches / 610mm	**24**
30 inches / 762mm	**30**
36 inches / 914mm	**36**
48 inches / 1219mm	**48**
Overall Length:	
72 inches / 1829mm	**72**
96 inches / 2438mm	**96**
120 inches / 3040mm	**20**
144 inches / 3658mm	**44**

Available Liner Types:	part no. code
Kemglass Fiberglass reinforced polyester 1805 UL classified	**G**
Type 316L Stainless Steel 1805 UL classified	**L**
Type 304L Stainless Steel 1805 UL classified	**S**
Phenolic Resin	**T**

Available Sash Frames:	part no. code
Powder Coated Steel	**M**
Type 304L Stainless Steel	**S**

Additional Parts Required for a Complete Fume Hood Assembly	
Work Floor & Shelf	see tops
Ceiling Enclosure	see ceiling enclosures
Service Fittings	see service fittings

	Liner Type	Sash Height	Inside Depth	Overall Length	Sash Frame		Sash Glass	Fitting Holes	Electrical Fixture	Option Choices		
V67		**68**				**-**	**G**	**F**				**...**

Technical Information V67

Airflow (CFM) Requirements

Face Velocity	Constant Air Volume Configuration – Panels Fully Open								Variable Air Volume Configuration – Panels Fully Open							
	6'-0" / 72"		8'-0" / 96"		10'-0" / 120"		12'-0" / 144"		6'-0" / 72"		8'-0" / 96"		10'-0" / 120"		12'-0" / 144"	
	CFM	SP	CFM	SP	CFM	SP	CFM	SP	CFM	SP	CFM	SP	CFM	SP	CFM	SP
120 FPM	2672	1.32	3688	1.63	4239	1.66	5166	2.06	2430	1.10	3370	1.37	3830	1.37	4660	1.70
100 FPM	2227	0.92	3074	1.15	3532	1.17	4305	1.46	2030	0.77	2810	0.97	3190	0.97	3890	1.21
80 FPM	1782	0.60	2459	0.75	2826	0.77	3444	0.96	1620	0.50	2250	0.63	2550	0.63	3110	0.79

Static pressures shown are for the pressure drop through the hoods only. The total pressure drop through the hood and the duct system must be calculated to select the proper exhaust fan.

Inside Depth	ANSI Z9.5 Minimum Flow Rate – 150 Air Changes/Hour				375 Air Changes/Hour			
	6'-0" / 72"	8'-0" / 96"	10'-0" / 120"	12'-0" / 144"	6'-0" / 72"	8'-0" / 96"	10'-0" / 120"	12'-0" / 144"
24" deep	210 CFM	290 CFM	370 CFM	450 CFM	520 CFM	720 CFM	910 CFM	1110 CFM
30" deep	260 CFM	350 CFM	450 CFM	540 CFM	630 CFM	870 CFM	1110 CFM	1350 CFM
36" deep	300 CFM	420 CFM	530 CFM	640 CFM	750 CFM	1030 CFM	1320 CFM	1600 CFM
48" deep	390 CFM	540 CFM	690 CFM	840 CFM	980 CFM	1350 CFM	1720 CFM	2090 CFM

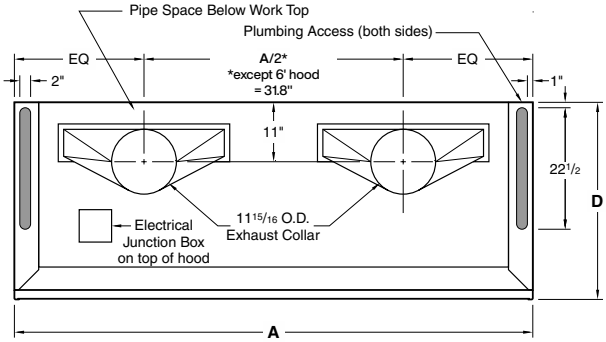

6'- 8'- 10'- 12' Rough-in

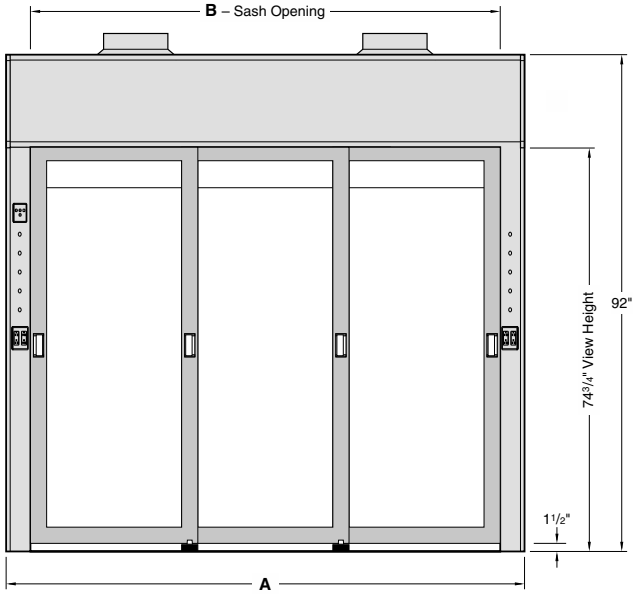

Elevation

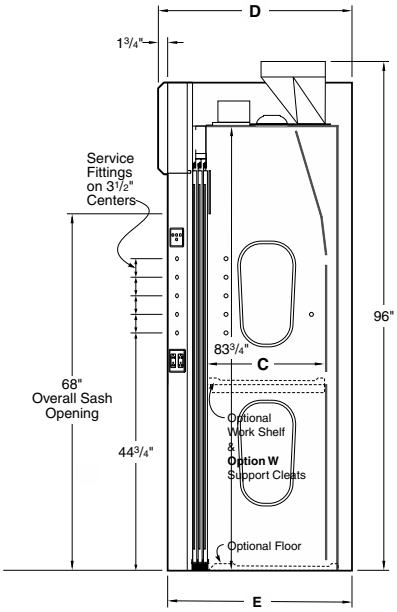

Vertical Section

Dimensions – Length				
A	72"	96"	120"	144"
B	63"	87"	111"	135"

Sash Panel Widths and Quantities				
Hood	72"	96"	120"	144"
Doors	23"(3)	31"(3)	23"(5)	29"(5)

Dimensions – Depth				
C	24"	30"	36"	48"
D	36½"	42½"	48½"	60½"
E	34¾"	40¾"	46¾"	58¾"

KEWAUNEE

Fume Hood Style & Option Availability

		General Purpose			Split Sash		ADA		LX Series	
		V05	V06	V07	V10	V11	V15	V16	V25	V26
Kemglass Liner (¼")	G	•	•	•	•	•	•	•	•	•
Type 316L Stainless Steel Liner (18 ga)	L	•	•	•	•	•	•	•	•	•
Type 304L Stainless Steel Liner (18 ga)	S	•	•	•	•	•	•	•	•	•
Phenolic Resin Liner (¼")	T	•	•	•	•	•	•	•	•	•
Frameless Sash	N	•		•			•		•	
Powder Coated Steel Sash Frame	M	•	•		•	•	•	•	•	•
Type 304L Stainless Steel Sash Frame	S	•	•		•	•	•	•	•	•
Type 316L Stainless Steel Sash Frame	L									
Laminated Safety Glass Sash	G1	•	•	•	•	•	•	•	•	•
Tempered Glass Sash	G2	•	•	•	•	•	•	•	•	•
Polycarbonate	G3	•	•	•	•	•	•	•	•	•
Rod Driven Needle Valve Fittings	F1	•	•	•	•	•			•	•
Rod Driven Ball Valve Fittings	F2						•	•		
Front Load Needle Valve Fittings	F3	•	•	•	•	•			•	•
Front Load Fittings TruView	F4									
Front Load Fittings ADA	F5									
Specification Grade GFCI Receptacles	S_	•	•	•	•	•	•	•	•	•
Hospital Grade GFCI Receptacles	H_	•	•	•	•	•	•	•	•	•
Variable Air Volume (VAV)	V1/V2	•	•	•	•	•	•	•	•	•
Air Alert 600 Alarm - Vertical Sash	A1	•			•		•		•	
Air Alert 600 Alarm - Combo Sash	A2		•	•		•		•		•
Air Alert 300 Alarm	A3	•	•	•	•	•	•	•	•	•
Sash Stop/Sash Open Safety Label	L	•	•		•	•	•	•	•	•
Distillation Rack - Preparation	D	•	•	•	•	•	•	•	•	•
Fire Suppression System	E	•	•	•	•	•	•	•	•	•
Safety Shield	S	•			•		•		•	
Tissue Screen	T	•	•	•	•	•	•	•	•	•
Cord Ports *(one provided in each side post)*	P1	•	•	•	•	•	•	•	•	•
Work Shelf Supports	W									
Vapor Proof Light	B1	•	•	•	•	•	•	•	•	•
Explosion Proof Light	B2	•	•	•	•	•	•	•	•	•
Fan/Blower Switch *(1hp motor rated)*	K	•	•	•	•	•	•	•	•	•
Pre-wired/UL 61010A-1 *(to a single circuit)*	U/U2	•	•	•	•	•	•	•	•	•
Type 304L Stainless Steel Airfoil	O	•	•	•	•	•	•	•	•	•
Type 316L Stainless Steel Airfoil	O2	•	•	•	•	•	•	•	•	•
Type 304L Stainless Steel Sash Pulls	Q	•	•		•	•	•	•	•	•
Type 316L Stainless Steel Duct Collar	C	•[1]	•[1]	•[1]	•[1]	•[1]	•[1]	•[1]	•[1]	•[1]
Auto Sash Return	R1	•	•				•	•	•	•
Proximity Sash Operator	R3	•	•		•[3]	•[3]	•	•	•	•
Single Point Piping Preparation	Z	•	•	•	•	•	•	•	•	•

[1] Standard on stainless steel lined hoods
[2] Controls top sash only
[3] Closes both sashes
[4] Available for 48", 60" & 72" long hoods only

KEWAUNEE

Fume Hood Style & Option Availability

		LX Series		Specialty		TruView Teaching								Floor-Mounted			
		V30	V36	V40	V45	V50	V51	V52	V53	V55	V56	V57	V58	V65	V66	V67	V90
Kemglass Liner (¼")	G	•	•			•	•	•	•	•	•	•	•	•	•	•	•
Type 316L S/S Liner (18 ga)	L	•	•		•									•	•	•	•
Type 304L S/S Liner (18 ga)	S	•	•	•										•	•	•	•
Phenolic Resin Liner (¼")	T	•	•											•	•	•	•
Frameless Sash	N			•	•	•		•		•		•		•			•
Powder Coat Steel Sash Frame	M	•	•	•		•	•	•	•	•	•	•	•	•	•	•	•
Type 304L S/S Sash Frame	S	•	•	•		•	•	•	•	•	•	•	•	•	•	•	•
Type 316L S/S Frame	L				•												
Laminated Safety Glass Sash	G1	•	•	•	•	•	•	•	•	•	•	•	•	•	•	•	•
Tempered Glass Sash	G2	•	•	•	•	•	•	•	•	•	•	•	•	•	•	•	•
Polycarbonate	G3	•	•	•	•									•	•	•	•
Rod Ctrl Needle Valve Fittings	F1	•	•											•	•	•	•
Rod Ctrl Ball Valve Fittings	F2																
Front Load Fittings	F3	•	•	•	•									•	•	•	•
Front Load Fittings TruView	F4					•	•	•	•	•	•	•	•				
Front Load Fittings ADA	F5							•	•			•	•				
Spec. GFCI Receptacles	S_	•	•	•	•	•	•	•	•	•	•	•	•	•	•	•	•
Hospital GFCI Receptacles	H_	•	•	•	•									•	•	•	•
Variable Air Volume (VAV)	V1/V2	•	•	•	•	•	•	•	•	•	•	•	•	•	•	•	•
Air Alert 600 - Vertical Sash	A1	•		•	•	•		•		•		•		•			•
Air Alert 600 - Combo Sash	A2		•				•		•		•		•		•	•	
Air Alert 300 Alarm	A3	•	•	•	•	•	•	•	•	•	•	•	•	•	•	•	•
Sash Stop/Sash Open Label	L	•	•	•	•	•	•	•	•	•	•	•	•	•	•		•
Distillation Rack - Preparation	D	•	•			•	•	•	•	•	•	•	•	•	•	•	•
Fire Suppression System	E	•	•											•	•	•	•
Safety Shield	S	•		•	•												
Tissue Screen	T	•	•	•	•	•	•	•	•	•	•	•	•	•	•	•	•
Cord Ports	P1	•	•											•	•	•	•
Work Shelf Supports	W						•							•[4]	•[4]	•[4]	
Vapor Proof Light	B1	•	•	•	std									•	•	•	•
Explosion Proof Light	B2	•	•	•	•									•	•	•	•
Fan/Blower Switch	K	•	•	•	•	•	•	•	•	•	•	•	•	•	•	•	•
Pre-wired/UL 61010A-1	U/U2	•	•	•	•	•	•	•	•	•	•	•	•	•	•	•	•
Type 304L S/S Airfoil	O	•	•	•	•	•	•	•	•	•	•	•	•				•
Type 316L S/S Airfoil	O2	•	•	•	•	•	•	•	•	•	•	•	•				•
Type 304L S/S Sash Pulls	Q	•	•	•	•	•	•	•	•	•	•	•	•	•[a]	•[a]		•[a]
Type 316L S/S Duct Collar	C	•[1]	•[1]	std	std	•	•	•	•	•	•	•	•	•[1]	•[1]	•[1]	•[1]
Auto Sash Return	R1					•	•	•	•	•	•	•	•				
Proximity Sash Operator	R3	•[3]	•[3]	•	•	•	•	•	•	•	•	•	•	•[2]	•[2]		•[2]
Single Point Piping Preparation	Z	•	•	•	•									•	•		•

[a] Pulls on lower sash only
[1] Standard on stainless steel lined hoods
[2] Controls top sash only
[3] Closes both sashes
[4] Available for 48", 60" & 72" long hoods only

KEWAUNEE

Venturi Fume Hood Options

VAV Restricted Bypass - Option V1 & V2

Venturi fume hoods are also designed for operation on Variable Air Volume (VAV) exhaust systems when used with a VAV control package (not provided with hood).

The fume hood will be modified for VAV system field installation (by VAV Controls Contractor).

The manufacturer and model number of the VAV controller along with the minimum flow rate requirement of the system must be provided at time of order to ensure the bypass is sized correctly for the exhaust system.

ANSI Z9.5 has defined a minimum flow rate range of 150 ACH - 375 ACH of the fume hood chamber.

Not compatible with Option A.

Option V1 — VAV Preparation
Option V2 — VAV Preparation with Single Gang Cutout in RH Fascia Post.

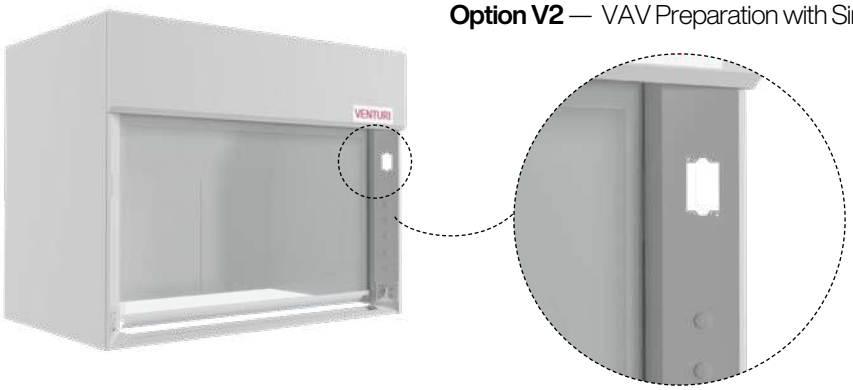

Air Alert Fume Hood Monitor – Option A1 & A2

Air Alert 600 Fume Hood Monitor consists of a thermistor sensor mounted on the fume hood interior wall and connected to fume hood containment cavity by a sensor port. A tube to the fume hood fascia completes monitored air path. The monitor measures and records the fume hood face velocity and sounds an alarm when the airflow falls below safe levels. A LCD displays a velocity readout and a visual one-hour "Event Timeline" that records alarm occurrences and their length for a continually updated one-hour time interval.

The display background displays green, amber, or red to signal safe, marginal, and low face velocity conditions. The alarm and display offers the hood user a variety of alarm features including, alarm set points, metric or classical units, alarm delay intervals, nighttime setback, and muting options. The Air Alert 600 operates on 9-30 volts AC or DC and comes complete with an adapter that can be plugged into any 120 VAC receptacle.

Not compatible with Option V.

Option A1 — Air Alert 600 – Vertical Sash Fume Hoods
Option A2 — Air Alert 600 – Combination & Horizontal Sash Fume Hoods

Air Alert Fume Hood Monitor – Option A3

Air Alert 300 consists of a thermistor sensor mounted through the end wall of the hood, and a control monitor that gives both a visual and audible alarm. The alarm monitors the fume hood face velocity and sounds an alarm when the airflow falls below safe levels. A glowing green light signals when conditions are again safe. The control monitor, which is mounted on the hood fascia, also contains a test/reset button that allows the hood user to verify alarm readiness.

The Air Alert 300 operates on a 9 volt DC circuit and comes complete with an adapter that can be plugged into any 120 VAC receptacle.

Not compatible with Option V.

Venturi Fume Hood Options

Stainless Steel Duct Collar – Option C

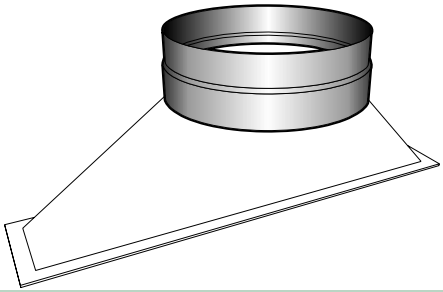

Stainless Steel Duct Collar may be specified on any Venturi fume hood as an addition to the standard FRP plenum and duct collar assembly.
(Type 316 Stainless Steel)

Adds 4" to the height of plenum duct collar assembly.

Distillation Rack Preparation – Option D

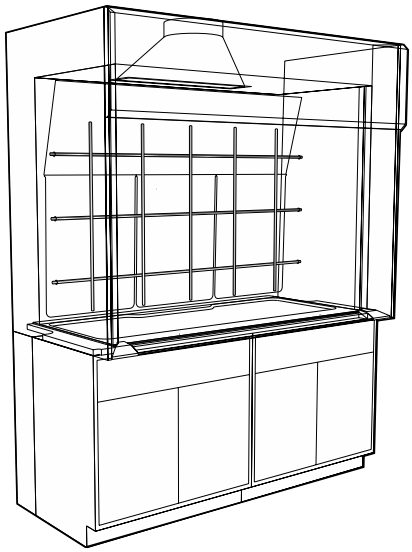

See Distillation Rack Part numbers for TruView hoods.

Venturi Fume Hoods may be prepared to accept a lattice style distillation rack. The rack consists of vertical and horizontal ½" diameter rods, fastened with rod clamps to form a lattice of approximate 12" squares. Rods are available in Stainless Steel, Duralumin, or Fiberglass Reinforced Polyester (FRP) rods.

Rod Assemblies must be Ordered Separately. *(see below)*

Type 304 Stainless Steel Rods			FRP Rods	
Bench Hoods *48"-60" High Interior*	Floor & Distillation *80"-84" High Interior*	**Hood Length**	Bench Hoods *48"-60" High Interior*	Floor & Distillation *80"-84" High Interior*
VHDRS480148	**VHDRS840148**	4'-0" / 48"	**VHDRP480148**	**VHDRP840148**
VHDRS480160	**VHDRS840160**	5'-0" / 60"	**VHDRP480160**	**VHDRP840160**
VHDRS480172	**VHDRS840172**	6'-0" / 72"	**VHDRP480172**	**VHDRP840172**
VHDRS480196	**VHDRS840196**	8'-0" / 96"	**VHDRP480196**	**VHDRP840196**
VHDRS480120	**VHDRS840120**	10'-0" / 120"	**VHDRP480120**	**VHDRP840120**
VHDRS480144	**VHDRS840144**	12'-0" / 144"	**VHDRP480144**	**VHDRP840144**

Duralumin Rods		
Bench Hoods *48"-60" High Interior*	Floor & Distillation *80"-84" High Interior*	**Hood Length**
VHDRA480148	**VHDRA840148**	4'-0" / 48"
VHDRA480160	**VHDRA840160**	5'-0" / 60"
VHDRA480172	**VHDRA840172**	6'-0" / 72"
VHDRA480196	**VHDRA840196**	8'-0" / 96"
VHDRA480120	**VHDRA840120**	10'-0" / 120"
VHDRA480144	**VHDRA840144**	12'-0" / 144"

Sliding Safety Shield – Option S

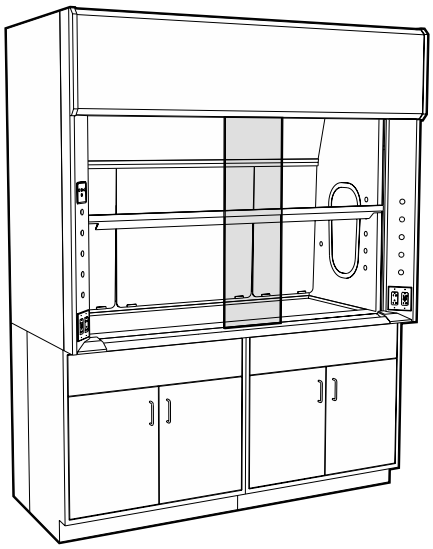

Sliding Safety Shield designed to provide protection to fume hood users from small explosions, splattering of chemicals, breaking glass, etc. This 12" wide x ¼" thick polycarbonate shield slides the full length of the hood face opening on ball bearing rollers suspended from a track at the top of the sash opening, with a guide at the bottom to keep the shield from swinging. When the shield is not in use, it can be easily removed from the upper track and stored until it is needed again for safety purposes.

Designed to be used on Vertical Rising Sash Bench Hoods only.

Not compatible with Option Q.

KEWAUNEE

Venturi Fume Hood Options

Stainless Steel Airfoil – Option O & O2

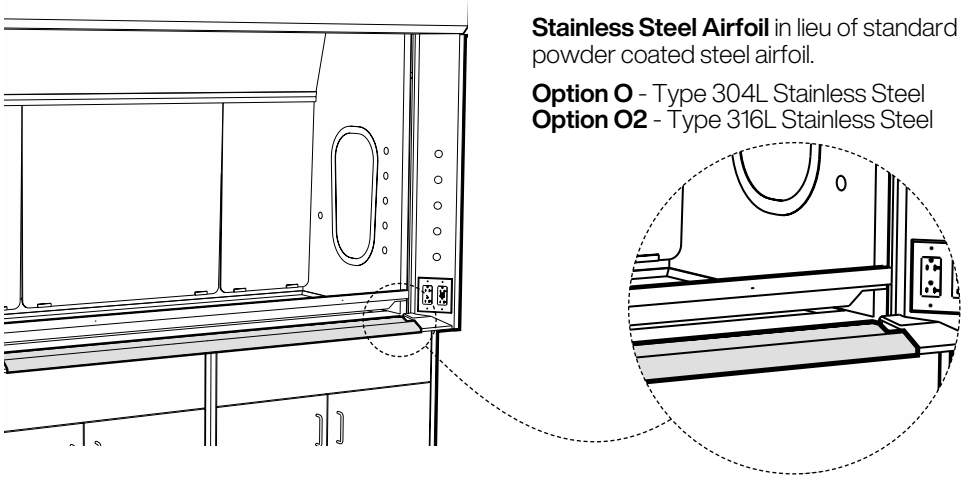

Stainless Steel Airfoil in lieu of standard powder coated steel airfoil.

Option O - Type 304L Stainless Steel
Option O2 - Type 316L Stainless Steel

Stainless Steel Sash Pulls – Option Q

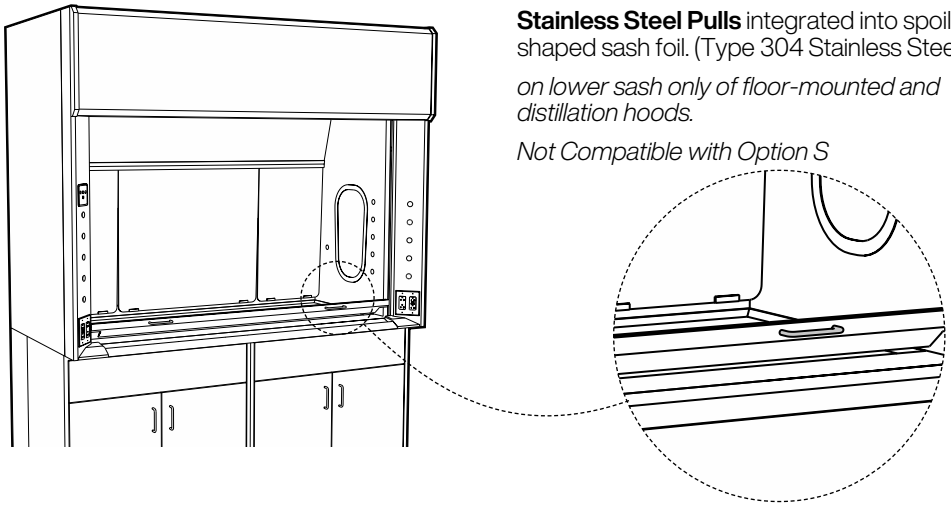

Stainless Steel Pulls integrated into spoiler shaped sash foil. (Type 304 Stainless Steel)

on lower sash only of floor-mounted and distillation hoods.

Not Compatible with Option S

Tissue Screen – Option T

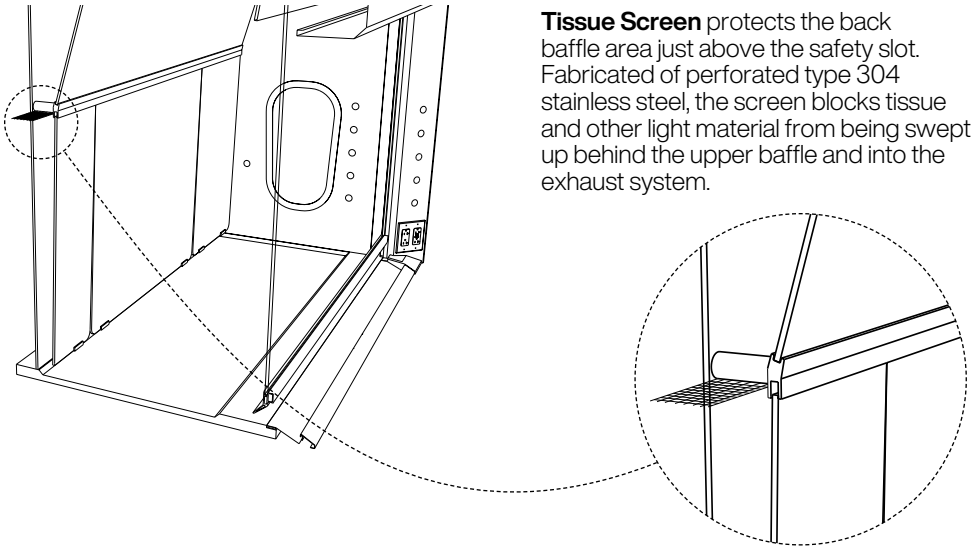

Tissue Screen protects the back baffle area just above the safety slot. Fabricated of perforated type 304 stainless steel, the screen blocks tissue and other light material from being swept up behind the upper baffle and into the exhaust system.

Venturi Fume Hood Options

Electrical Fixture Options

Specification Grade GFCI – Option S_

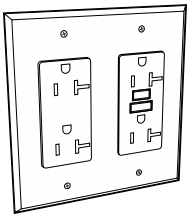

SK = GFCI Specification Grade – Black
SV = GFCI Specification Grade – Ivory
SW = GFCI Specification Grade – White
SG = GFCI Specification Grade – Grey
SR = GFCI Specification Grade – Red

120 volt GFCI specification grade, 20 amp, ground fault protected, double duplex receptacle.

Note: One ground fault circuit interrupter will protect the duplexes in each post when wired on the same circuit as standard.

Hospital Grade GFCI – Option H_

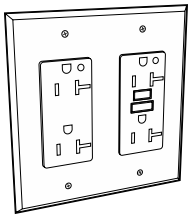

HK = GFCI Hospital Grade – Black
HV = GFCI Hospital Grade – Ivory
HW = GFCI Hospital Grade – White
HG = GFCI Hospital Grade – Grey
HR = GFCI Hospital Grade – Red

120 volt GFCI hospital grade, 20 amp, ground fault protected, double duplex receptacle.

Note: One ground fault circuit interrupter will protect the duplexes in each post when wired on the same circuit as standard.

Fan/Blower Switch – Option K

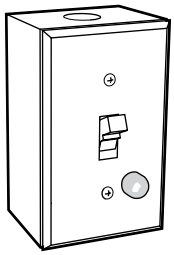

Motor rated starter switch with pilot light mounted in a single gang receptacle box complete with face plate, 120 volt pilot light, and double pole toggle switch with thermal overload protection for up to 1 HP single phase, 60 hertz 120/240 volt AC motors. (Thermal unit not provided)

Mounted on left fascia post above Light/Sash Stop Release Controller panel.

K = Fan Switch

Pre-wired/UL 61010A-1 Listed – Option U & U2 (single circuit)

Pre-wired — All Venturi Fume Hoods may be pre-wired at the factory. Pre-wired hoods are wired using flexible metallic conduit to a single junction box located at the top of the hood for a single circuit, single point connection for a UL 61010A-1 listing.

Pre-wired hoods configured with a fan/blower switch (Option K) include a second junction box on the top of the hood.

U = Pre-wiring for hoods with standard LED lighting

U2 = Prewiring for hoods with Vapor Proof (Option B1) or Explosion Proof (Option B2) lighting

Venturi Fume Hood Options

Cord Ports – Option P1

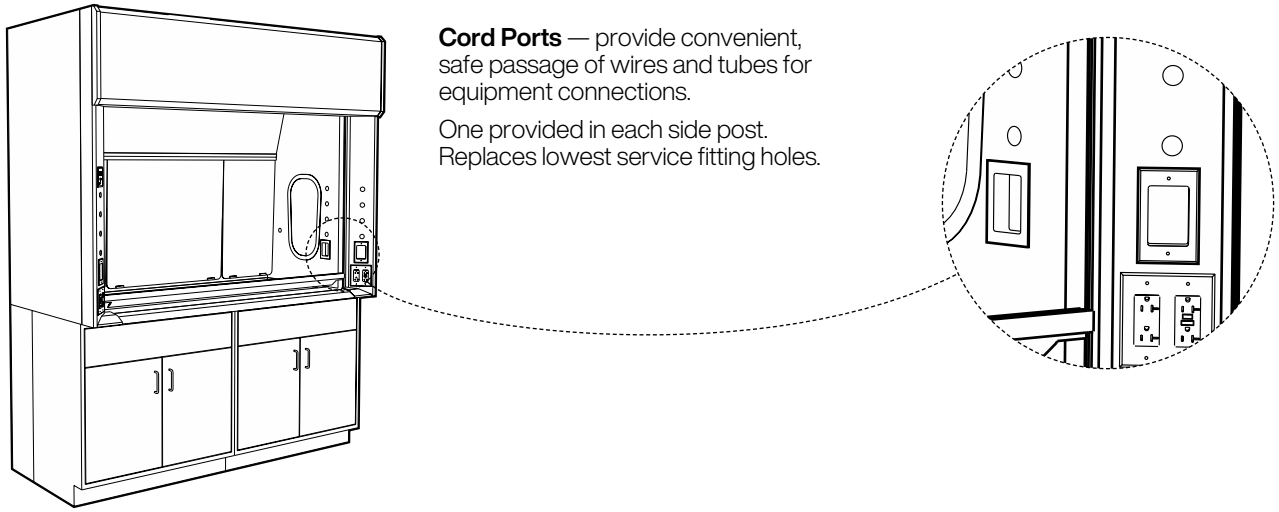

Cord Ports — provide convenient, safe passage of wires and tubes for equipment connections.

One provided in each side post. Replaces lowest service fitting holes.

Auto Sash Return – Option R1

The Auto Sash Return option provides an automatic, gravity operated. sash return that lowers the sash to 18" from the full-open set-up position. When the sash is raised to the full open position a sash lock holds the sash open for set-up purposes. By pressing the electronic **Sash Stop Release Button**, the sash automatically closes to the 18" operating height.

Proximity Sash Operator – Option R3

The Proximity Sash Operator uses an overhead motion sensor to monitor the area in front of the hood for the presence of lab personnel. Scanning at regular intervals, when it senses there has been no movement within the programmed period of time, it automatically closes the sash slowly and safely. When personnel are present, the sash is able to be opened and closed manually.

In addition to the motion sensor, a photoelectric sensor placed on the sash creates a light beam which scans the sash area for obstructions in the path of the sash. When an obstruction exists, the sash will halt its descent, and a warning light will signal that an obstruction exists. Once the obstruction is removed, the sash operator warning light will reset, and the unit will re-engage.

The Proximity Sash Operator is factory installed on the fume hood with all required mechanical connections to the sash shaft for proper operation, and is pre-wired to a junction box located on the top of the hood.

Sash Stop Label – Option L

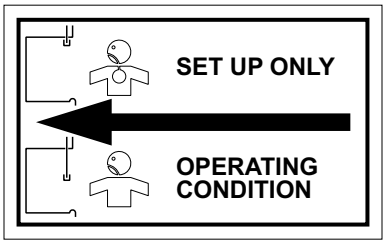

Label Size 2⅝" x 1⅝"

Sash Open Safety Label
May be used on any vertical or combination sash fume hood to indicate proper sash position for safe fume hood operation. Ideal for use when fans are sized for less than full sash open operation. Label is printed in black on white vinyl.

Venturi Fume Hood Options

Fire Suppression System – Option E

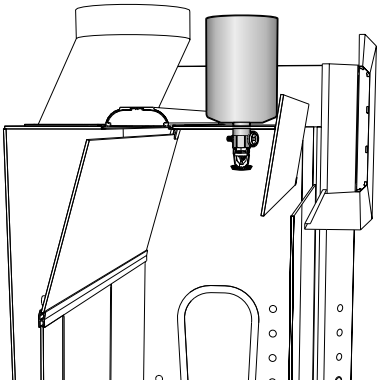

Venturi Fume Hoods may be fitted with a Fire Suppression System to control runaway experiments and the hazards of fire. The heart of the system is the patented CFF 800 Dual Agent ABC Dry Chemical Fire Suppression System Unit, vertically mounted in the top of the fume hood for complete coverage. The suppression unit is fully self-contained and may be easily removed for maintenance or replacement. Each fire suppression unit is equipped with a pressure gauge for easy status checking, a pressure switch that can be wired back to a monitoring or control panel (IE; burglar alarm) for 24 hour a day monitoring supervision and notification, and a 155F temperature bulb for automatic heat activation. To ensure complete coverage, four foot, five foot, six foot, and eight foot long fume hoods are protected with one fire suppression unit mounted in the center of the enclosure. Ten foot and twelve foot long fume hoods require two units for complete protection. Each CFF 800 unit is capable of protecting 8.2' x 8.2' x 12.2' or 820 cubic feet.

Work Shelf Supports – Option W

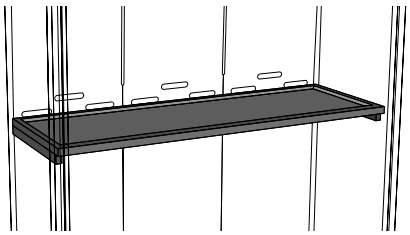

Venturi Floor-Mounted Fume Hoods may be fitted with a removable Work Shelf mounted at 36" above the floor. The Work Shelf requires reinforcements in the fume end walls to attach the Work Shelf Cleats and to carry the weight of the Work Shelf. Option W adds the reinforcements to a Floor-Mounted Fume Hood, but not the Work Shelf and cleats which must be ordered separately.

Available for 4 foot, 5 foot, and 6 foot Floor-Mounted Hoods only

Vapor Proof Light – Option B1

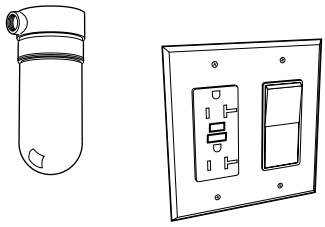

Option B1 replaces the standard LED light, light controller, and double GFCI double duplex receptacles on the left hand sash post with an 150 watt vapor proof light and a combination single duplex, 120 volt AC, 20 amp, GFCI receptacle and a single pole, 120/240 volt AC, 20 amp light switch.

Fixtures are furnished installed but not wired unless Option U2 (pre-wired is specified.

Note: Type A19, LED equal to 150W, E26 base bulb not included

Explosion Proof Light – Option B2

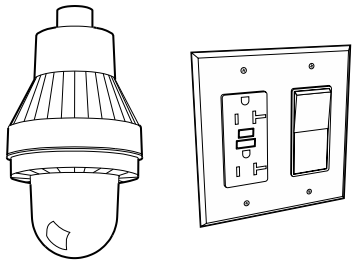

Option B2 replaces the standard LED light, light controller, and double GFCI double duplex receptacles on the left-hand sash post with an explosion-proof light, a combination single duplex 120V AC 20A GFCI receptacle, and a single-pole 120/240V AC 20A light switch

Light switch and receptacles are installed but not wired unless Option U2 (pre-wired) is specified. When not pre-wired, the entire light fixture ships loose for field installation. When pre-wired, the fixture base and conduit are installed on the hood; the globe ships loose.

Explosion Proof Light
for use in wet locations

NEC/CEC – For Groups C and D;
Class 1, Division 1 , Groups C & D
Class 2, Division 1 , Groups E, F, & G
Class 3

Notes: Built-in LED Bulb included; Light switch is <u>not</u> explosion proof

Sash Glass - *See Option Codes below*

Laminated Safety Glass - Option G1
Laminated safety glass is made from two layers of float glass bound together by a layer of Polyvinyl Butyral (PVB). When broken, glass pieces will tend to adhere to the PVB layer instead of flying or falling into an adjacent user

Tempered Safety Glass - Option G2
Tempered safety glass offers higher impact resistance. It performs well in areas of rapid and high temperature changes. If broken, it will shatter into small, safe pieces.

Polycarbonate - Option G3

Polycarbonate is suggested when using Hydrofluoric Acid (HF) and provides superior resistance to chemical etching.

KEWAUNEE

Venturi Fume Hood & TruView Tops

Worktops – Work Shelves – Work Floor

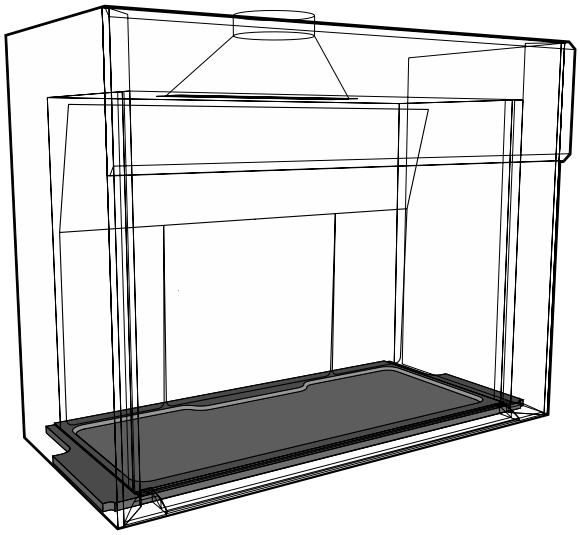

Venturi Bench Hoods require a Worktop that must be ordered separately. Worktops are available in either Kemresin or Stainless Steel, are dished ½" to retain spillage, and incorporate a 2" wide safety rim at the front.

They may include cutouts for cupsinks or vent pipes when specified with the cutout option.

Cupsinks must be ordered separately.

Venturi Floor-Mounted Hoods may be ordered with a removable Work Shelf and/or a Work Floor that must be ordered separately. Both are available in either Kemresin or Stainless Steel, are dished ½" to retain spillage, incorporate a 2" wide safety rim at the front, and are not furnished with cutouts standard.

To mount the removable Work Shelf, the Venturi Floor-Mounted Hood must be ordered with the **W** Option.

Worktops and floors over 96 inches long are shipped in multiple sections.

Hood Worktop Type	Material	Thickness	Depth	Overall Length	Optional Cupsink and Vent Cutouts (see next page)		Kemresin Color
V		01			- ...	VH	

Worktop

HBT = Venturi Worktop for Vertical Sash Bench & Distillation Hoods
HHT = Venturi Worktop for Horizontal Sash Bench Hoods
HWS = Venturi Shelf with Cleats *(for 4'- 5'- 6' Floor-Mounted Hoods)*
HHF = Venturi Hood Floor *(for Floor-Mounted Hoods)*
TBT = TruView Worktop for Distillation Rack *(click here for illustration; Kemresin only)*

Worktop Material

R = Kemresin
S = Type 304L Stainless Steel
L = Type 316L Stainless Steel

(Required for Kemresin Tops Only) **Worktop Color**

Black = **BK** Grey = **GR** Putty = **PT** Slate = **SL**

Hood Overall Length

4' / 48" = **48** 6' / 72" = **72** 10' / 120" = **20**
5' / 60" = **60** 8' / 96" = **96** 12' / 144" = **44**

Floor-Mounted Hood Work Shelf **Work Shelf Depth** — Bench Hood Worktops & Floor-Mounted Hood Floor **Hood Interior Depth**

24" = **24** 24" = **24** 30" = **30**
36" = **36** 48" = **48**

Worktop Thickness

1¼" = **01**

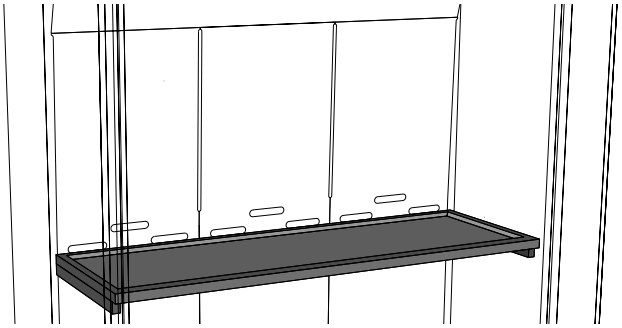

Optional Work Shelf with Cleats
for 4 foot, 5 foot & 6 foot Floor Mount Hood

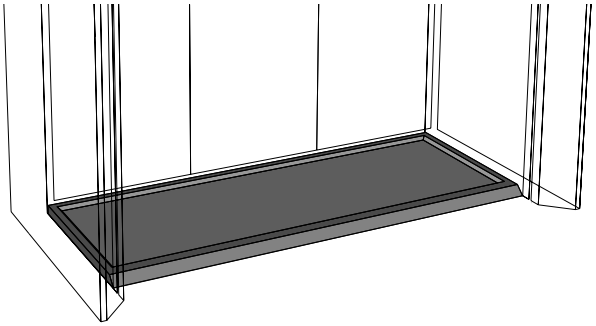

Optional Hood Work Floor
for Floor Mount Hood

Venturi Fume Hood & TruView Tops

Cutout Options

Kemresin and poly cupsinks are shipped loose. Stainless steel cupsinks, when ordered with the top, are welded in place.

Note: Kemresin & poly cupsinks may only be used in Kemresin hood tops, type 304L stainless steel cupsinks may only be used in type 304L stainless steel tops, and type 316L stainless steel cupsinks may only be used in the type 316L tops.

Cupsinks must be ordered separately.

Cupsink Cutout

Cupsink Part Number	Cupsink Location	Cupsink Direction	...	Cupsink Elevation

Cupsink Part Number

Kemresin/Poly

- **81** = 0481 3"x6" Rectangular
- **90** = 0490 3"x6" Oval
- **91** = 0491 3"x6" Oval
- **92** = 0492 3"x9" Oval
- **93** = 0493 Rectangular
- **99** = 0499 Rear Outlet *front vertical position only*

Stainless Steel

- **50** = 0950 Type 304L Round
- **51** = 0951 Type 316L Round

Cupsink Elevation

Flush = **E1**
Raised = **E2**

stainless steel cupsinks are only available flush mounted

Cupsink Direction

Horizontal = **H**
Vertical = **V**

cupsinks can not be vertically mounted in the rear of 24" deep hoods

Cupsink Location

Left Front = **LF**
Left Rear = **LR**
Right Front = **RF**
Right Rear = **RR**

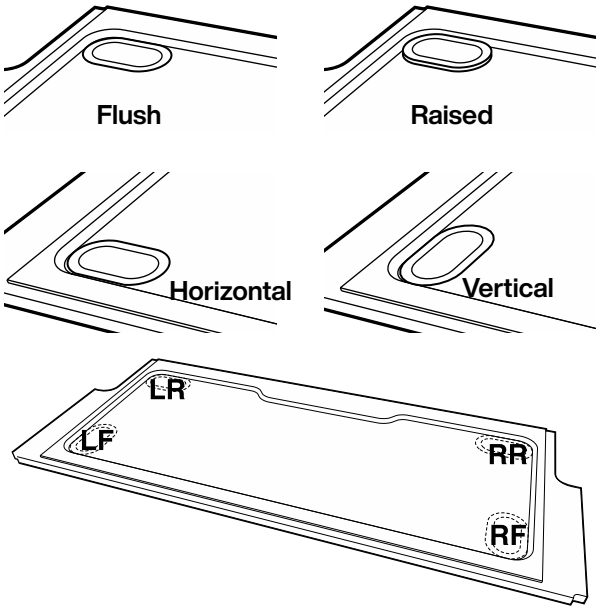

Vent Cutout *2" diameter hole*

Cutout Type	Vent Location		
V			

Cutout Type

- **VH** = Vent Hole *for 4' - 5' - 6' - 8' tops*
- **VL** = Vent Hole *for Left Side of 10' - 12' tops*
- **VR** = Vent Hole *for Right Side of 10' - 12' tops*

Vent Locations

- None = **000**
- Left = **100**
- Center = **010**
- Right = **001**
- Left & Center = **110**
- Center & Right = **011**
- Left & Right = **101**
- Left, Right & Center = **111**

Worktops for 4 foot, 5 foot, 6 foot and 8 foot hoods may include up to three vent holes. Worktops for 10 foot and 12 foot hoods may include up to six vent holes.

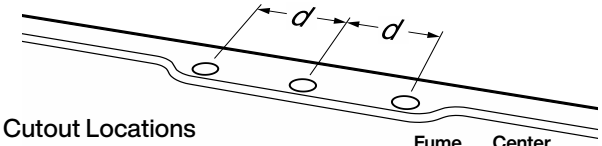

Vent Cutout Locations
4' - 5' - 6' - 8' Hoods

Fume Hood Length	Center to Center d =
4'	3"
5'	8"
6'	8"
8'	20"

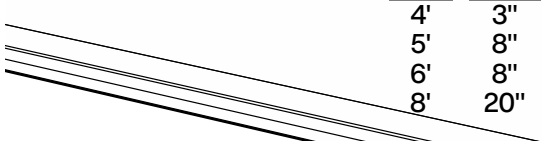

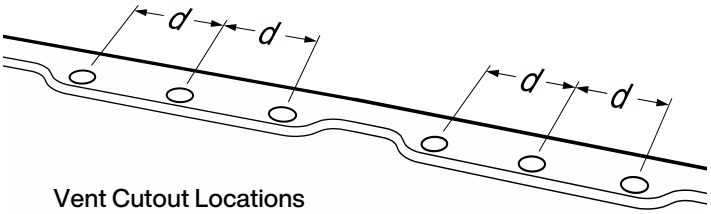

Vent Cutout Locations
10' - 12' Hoods

Fume Hood Length	Center to Center d =
10'	6"
12'	12"

KEWAUNEE

Cupsinks

Oval Cupsinks

SCP0499B Black Poly
SCP0499G Grey Poly
SCP0499P Putty Poly
SCP0499S Slate Poly
Complete with integral strainer, 12" horizontal tail-piece, and 90° elbow with 1½" IPS male straight thread outlet. Cupsink inside dimension, 5½" x 3½". (Overall height is 7", tailpiece and elbow not illustrated)
Designed for front, vertical position in hood worktop. For ADA use 0481 below.

SCR0490N-BE Black Epoxy
SCR0490N-GE Grey Epoxy
SCR0490N-PE Putty Epoxy
SCR0490N-SE Slate Epoxy
Complete with removable strainer. 6"x 3" inside dimension. 1½" IPS male straight thread outlet.
(Overall height is 7½")

0491-BP Black Poly
0491-GP Grey Poly
Complete with removable strainer. 6"x 3" inside dimension. 1½" IPS male straight thread outlet.
(Overall height is 8½")

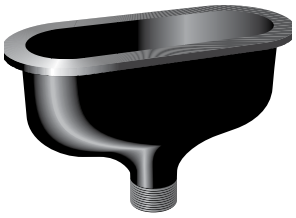

0492-BP Black Poly
0492-GP Grey Poly
Complete with removable strainer. 9"x 3" inside dimension. 1½" IPS male straight thread outlet.
(Overall height is 7")

Rectangular Cupsink

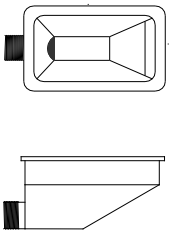

0481-BP Black Poly
0481-GP Grey Poly
Shallow cupsink. 6"x 3" inside dimension. 1½" IPS male straight thread outlet.
(Overall height is 4½", tailpiece not illustrated.)
Designed for front, vertical position in ADA hood worktop.

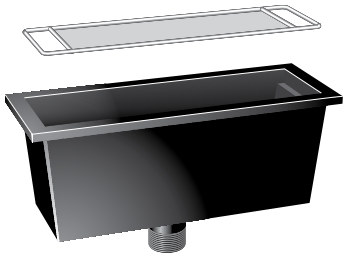

SCR0493N-BE Black Epoxy
SCR0493N-GE Grey Epoxy
SCR0493N-PE Putty Epoxy
SCR0493N-SE Slate Epoxy
Complete with gasket and removable type 316 stainless steel wire screen. 13⅜" x 4⅛" x 5¼" I.D. 1½" IPS male straight thread outlet.
(Overall height is 8")

Stainless Steel Cupsinks

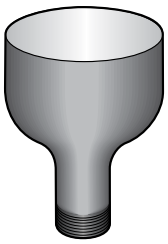

0950-00 Stainless Steel
Made of type 304 stainless steel and has integral cross bars. 5" I.D. 1½" IPS male straight thread outlet. Designed to be welded into stainless steel tops.

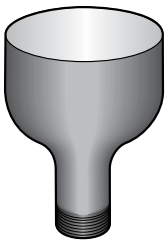

0951-00 Stainless Steel
Made of type 316 stainless steel and has integral cross bars. 5" I.D. 1½" IPS male straight thread outlet. Designed to be welded into stainless steel tops.

Side Mounted Cupsink

0476-BP Black Poly
0476-GP Grey Poly
Molded of black polyolefin resins. Complete with 90° union elbow. Designed to be mounted in a vertical panel not over ¼" thick. 6" x 3" inside dimension. 1½" IPS male straight thread outlet.

Hood Enclosures & Finished Backs

Fume Hood Ceiling Enclosures

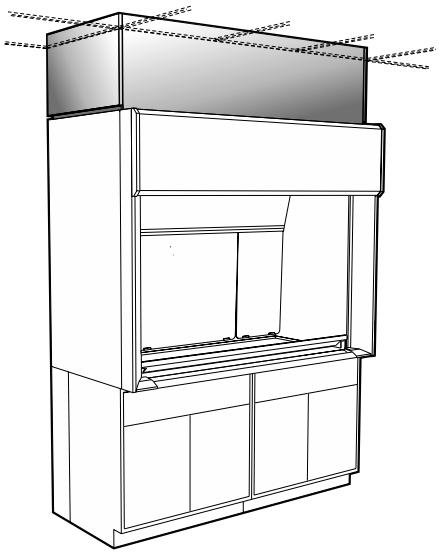

Fume Hood Ceiling Enclosures are designed to fill the space between the top of the hood and the ceiling to provide a finished appearance. They are available in height from 9" to 30" in 1" increments and in lengths to match the hoods. **CF** Style enclosures are 1⅛" deeper than **HV** Style enclosures to accomodate thicker sash assemblies.

All are provided with a removable front panel for easy access to the light fixture.

Enclosure Type	Material	Enclosure Height	Enclosure Depth	Overall Length		Style	Option
VH	CE	M			-		

Enclosure Type

CE = Ceiling Enclosure

Material

M=Powder Coated Steel

Enclosure Height

09 - 30 in 1" increments

Enclosure Depth

24 = 24" **30** = 30" **36** = 36" **48** = 48"

Option

Finished Back = **FB**

Styles

Horizontal Sash Hoods = **HV**
V07-V67
& Vertical Sash Bench Hoods
V05-V10-V15
V25-V30-V40-V45

Combo Sash Hoods = **CF**
V06-V11-V16-V26-V36
& Floor-Mounted Hoods
V65-V66-V90

Hood Overall Length

4'-0" / 48" = **48**
5'-0" / 60" = **60**
6'-0" / 72" = **72**
8'-0" / 96" = **96**
10'-0"/120" = **20**
12'-0"/144" = **44**

Fume Hood Finished Backs

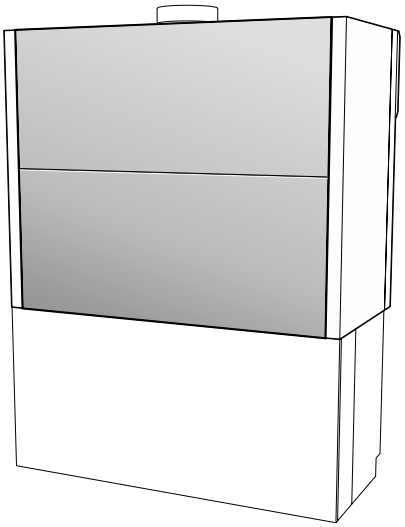

Fume Hood Finished Backs are furnished in two pieces

Fume Hood Finished Backs are designed to enclose the back of the fume hood when it is exposed to view and are removable without the use of tools for when access is required.

General Purpose Hood *57" High*	ADA Hood *60" High*	Length
VHFBM570148	**VHFBM600148**	4'-0" / 48"
VHFBM570160	**VHFBM600160**	5'-0" / 60"
VHFBM570172	**VHFBM600172**	6'-0" / 72"
VHFBM570196	**VHFBM600196**	8'-0" / 96"
VHFBM570120		
VHFBM570144		

LX Series Hood *69" High*	Floor-Mounted Hood *92" High*	Length
VHFBM690148	**VHFBM920148**	4'-0" / 48"
VHFBM690160	**VHFBM920160**	5'-0" / 60"
VHFBM690172	**VHFBM920172**	6'-0" / 72"
VHFBM690196	**VHFBM920196**	8'-0" / 96"
VHFBM690120	**VHFBM920120**	10'-0" / 120"
VHFBM690144	**VHFBM920144**	12'-0" / 144"

KEWAUNEE

Venturi Fume Hood Service Fittings

Service Fittings Part Number

V -	Valve Model	Service	-	Valve/Outlet Location	Valve Handle	Service Outlet	Back Outlet Location	Piping Options

Valve Model

3185 = Rod Driven Needle Valve
4285 = Rod Driven Ball Valve
0739 = Front Load Needle Valve

Service

A = Air
G = Gas
V = Vacuum
N = Nitrogen
R = Argon
S = Steam
D = Distilled Water
W = Cold Water
H = Hot Water
M = H & C Water

Valve/Outlet Location

LF = Left Hand - Front of Hood
RF = Right Hand - Front of Hood
LB = Left Hand - Back of Hood
RB = Right Hand - Back of Hood

Valve Handle

4C = 4-arm Chrome Plated Brass
MN = Color Coded Molded Nylon
LC=2½" Chrome Plated Brass Lever

Piping Option

(no piping) Installed = **IN**
Installed & Piped Up = **PU**
Installed & Piped Down = **PD**
Installed & Piped Up to Single Point = **SP**

Back Outlet Location

24" Deep Hood Interior = **L24**
30" Deep Hood Interior = **L30**
36" Deep Hood Interior = **L36**
48" Deep Hood Interior = **L48**

Service Outlet

Angled Color Coded Nylon = **AN**
Angled Color Coded Brass = **AB**
4¼" 90° Color Coded Brass = **4R**
4¼" 90° Color Coded Brass w/Vac. Breaker = **4RVB**
Color Coded 6" Gooseneck = **6G**
Color Coded 6" Vacuum Breaker Gooseneck = **6GVB**

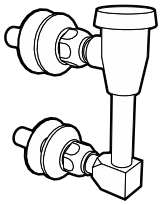

Vacuum Breaker Assembly

for elevated mounting in top front panel of fume hood.

V0112-P Pre-piped

⅜" I.P.S. inlet and outlet, includes brass nipples, locknuts, and washers.

Vacuum Breaker (not pictured)

for elevated mounting in side wall of fume hood

V0539-P Pre-piped

⅜" I.P.S inlet and outlet

Service Fitting Colors & Index Symbols

Service	Fitting Color	Index Symbol	Index Color	Letter Color
Air	Orange	AIR	Orange	Black
Gas	Blue	GAS	Blue	White
Vacuum	Yellow	VAC	Yellow	Black
Nitrogen	Brown	NIT	Brown	White
*Argon	Violet	AR	Violet	White
Steam	Black	STM	Black	White
Distilled Water	White	DW	White	Black
Cold Water	Green	CW	Green	White
*Hot Water	Red	HW	Red	White
*H & C Water	Dark Grey			

* not available in Angled Color Coded Nylon

Pre-wired & Pre-piped

Pre-wired — Venturi Fume Hoods may be factory pre-wired using flexible metallic conduit to a single junction box at the top of the hood for one-point field connection. Standard pre-wired configurations are UL listed.

A "U" option must be selected for fume hoods to be UL 61010A-1 listed.

Pre-piped — The fume hoods may be factory pre-piped when pre-piped fittings are selected. Piping is routed to the rear of the hood on the side where fittings are installed; hoods with fittings on both ends have two connection points. Piping may be routed to the top or bottom of the hood, as specified. **Note:** Standard joints are soldered; brazed joints are available upon special request.

Standard ⅜" Piping Materials

Water — Hard Drawn Type L Copper
Gas — Black Steel
Vacuum — Hard Drawn Type L Copper
Air — Hard Drawn Type L Copper
DI Water — PVC
Other — Hard Drawn Type L Copper
(Copper connections made with lead free solder, black steel connections are threaded)

Venturi Fume Hood Service Fittings

Rod Driven Needle Valves — Front Location

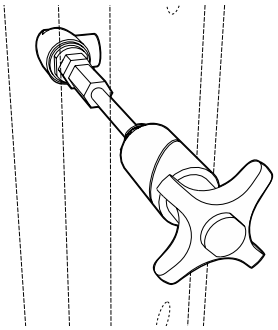

3185
Needle Valve - Left Hand

	Loc.	Handle	Outlet	Piping	
V-3185A -	F				Air
V-3185G -	F				Gas
V-3185V -	F				Vacuum
V-3185N -	F				Nitrogen
V-3185R -	F				Argon
V-3185S -	F	M	N	A N	Steam
V-3185D -	F				Distilled Water
V-3185W -	F				Cold Water
V-3185H -	F				Hot Water
V-3185M -	F				H & C Water

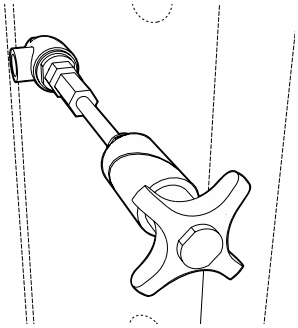

3185
Needle Valve - Right Hand

Minimum Spacing **3½"**
vertical distance between fittings

Valve Handles

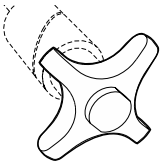

4C
4-Arm Handle
Chrome Plated Brass

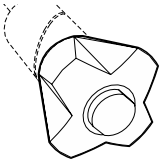

MN
Molded Nylon
Color Coded Handle

Service Outlets

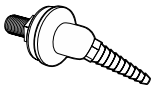

AN
Angled
Color Coded Nylon

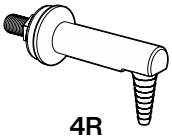

4R
4¼" 90° Outlet
Color Coded Brass

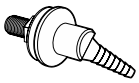

AB
Angled
Color Coded Brass

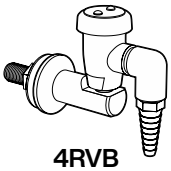

4RVB
4¼" 90° Outlet
with Vacuum Breaker
Color Coded Brass

Rod Driven Needle Valves — Back Location

	Loc.	Handle	Outlet		Depth	Piping		
V-3185W -	B				L			Cold Water
V-3185H -	B				L			Hot Water
V-3185M -	B				L			H & C Water

Back Location Water Outlets

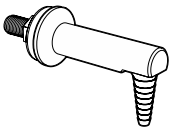

4R
4¼" 90° Outlet
Color Coded Brass

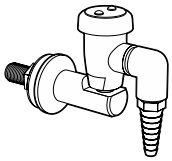

4RVB
4¼" 90° Outlet
with Vacuum Breaker
Color Coded Brass

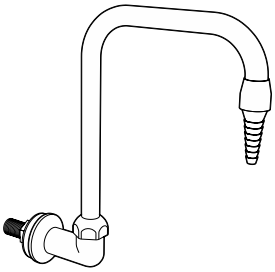

6G
6" Rigid/Swing Gooseneck
Color Coded Brass

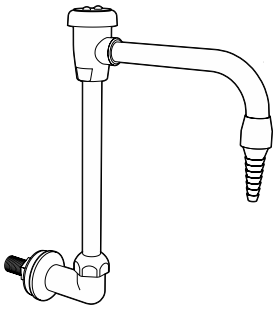

6GVB
6" Rigid/Swing Gooseneck
with Vacuum Breaker
Color Coded Brass

KEWAUNEE

Venturi Fume Hood Service Fittings

Rod Driven Ball Valves — Front Location — for use on ADA Fume Hoods only

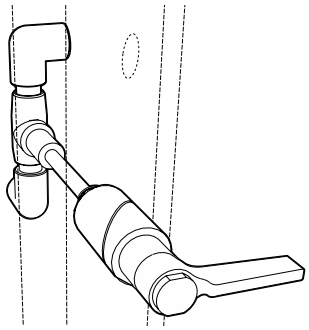

4285
Ball Valve - Left Hand

	Loc.	Handle	Outlet	Piping	
V-4285A -	☐	**F**	**L**	**C** ☐☐☐☐	Air
V-4285G -	☐	**F**	**L**	**C** ☐☐☐☐	Gas
V-4285V -	☐	**F**	**L**	**C** ☐☐☐☐	Vacuum
V-4285N -	☐	**F**	**L**	**C** ☐☐☐☐	Nitrogen
V-4285R -	☐	**F**	**L**	**C** ☐☐☐☐	Argon
V-4285D -	☐	**F**	**L**	**C** ☐☐☐☐	Distilled Water
V-4285W -	☐	**F**	**L**	**C** ☐☐☐☐	Cold Water
V-4285H -	☐	**F**	**L**	**C** ☐☐☐☐	Hot Water
V-4285M -	☐	**F**	**L**	**C** ☐☐☐☐	H & C Water

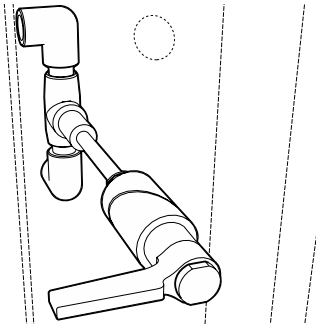

4285
Ball Valve - Right Hand

Minimum Spacing **5"**
vertical distance between fittings

Valve Handles

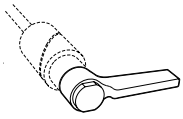

LC
Lever Handle
Chrome Plated Brass

Service Outlets

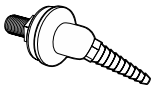

AN
Angled
Color Coded Nylon

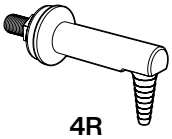

4R
4¼" 90° Outlet
Color Coded Brass

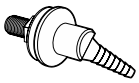

AB
Angled
Color Coded Brass

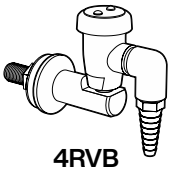

4RVB
4¼" 90° Outlet
with Vacuum Breaker
Color Coded Brass

Rod Driven Ball Valves — Back Location — for use on ADA Fume Hoods only

	Loc.	Handle	Outlet	Depth	Piping	
V-4285W -	☐	**B**	**L**	**C** ☐☐	**L** ☐☐☐☐	Cold Water
V-4285H -	☐	**B**	**L**	**C** ☐☐	**L** ☐☐☐☐	Hot Water
V-4285M -	☐	**B**	**L**	**C** ☐☐	**L** ☐☐☐☐	H & C Water

Back Location Water Outlets

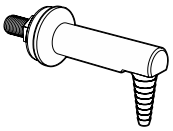

4R
4¼" 90° Outlet
Color Coded Brass

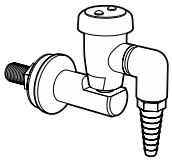

4RVB
4¼" 90° Outlet
with Vacuum Breaker
Color Coded Brass

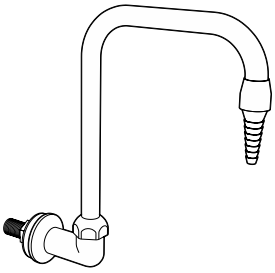

6G
6" Rigid/Swing Gooseneck
Color Coded Brass

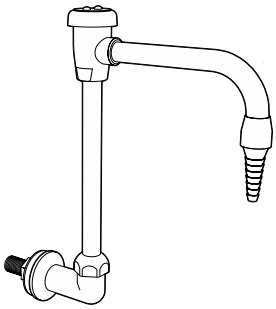

6GVB
6" Rigid/Swing Gooseneck
with Vacuum Breaker
Color Coded Brass

Venturi Fume Hood Service Fittings

Front Load Needle Valves — Front Location

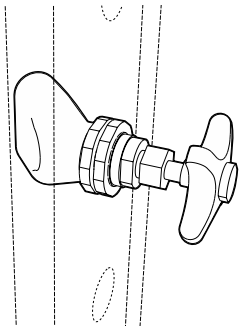

0739
Front Load Valve - Left Hand

	Loc.	Handle	Outlet	Piping	
V-0739A -	F				Air
V-0739G -	F				Gas
V-0739V -	F				Vacuum
V-0739N -	F				Nitrogen
V-0739R -	F				Argon
V-0739S -	F	M	N	A N	Steam
V-0739D -	F				Distilled Water
V-0739W -	F				Cold Water
V-0739H -	F				Hot Water
V-0739M -	F				H & C Water

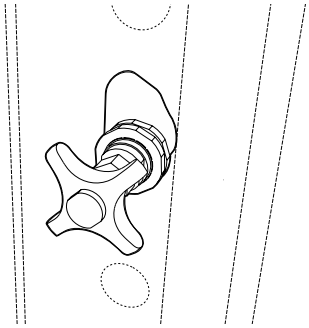

0739
Front Load Valve - Right Hand

Minimum Spacing **3½"**
vertical distance between fittings

Valve Handles

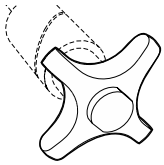

4C
4-Arm Handle
Chrome Plated Brass

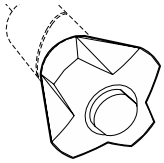

MN
Molded Nylon
Color Coded Handle

Service Outlets

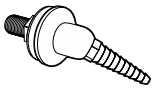

AN
Angled
Color Coded Nylon

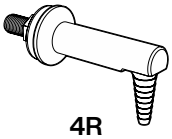

4R
4¼" 90° Outlet
Color Coded Brass

AB
Angled
Color Coded Brass

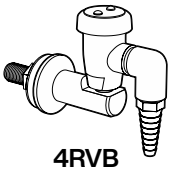

4RVB
4¼" 90° Outlet
with Vacuum Breaker
Color Coded Brass

Front Load Needle Valves — Back Location

	Loc.	Handle	Outlet	Depth	Piping	
V-0739W -	B			L		Cold Water
V-0739H -	B			L		Hot Water
V-0739M -	B			L		H & C Water

Back Location Water Outlets

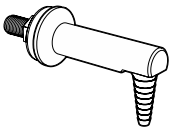

4R
4¼" 90° Outlet
Color Coded Brass

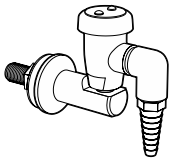

4RVB
4¼" 90° Outlet
with Vacuum Breaker
Color Coded Brass

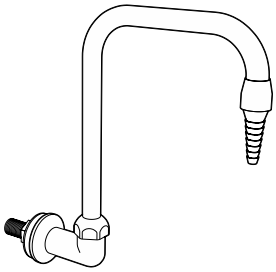

6G
6" Rigid/Swing Gooseneck
Color Coded Brass

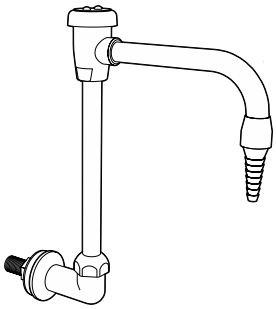

6GVB
6" Rigid/Swing Gooseneck
with Vacuum Breaker
Color Coded Brass

KEWAUNEE

TruView Enclosures & Distillation Racks

TruView Ceiling Enclosures

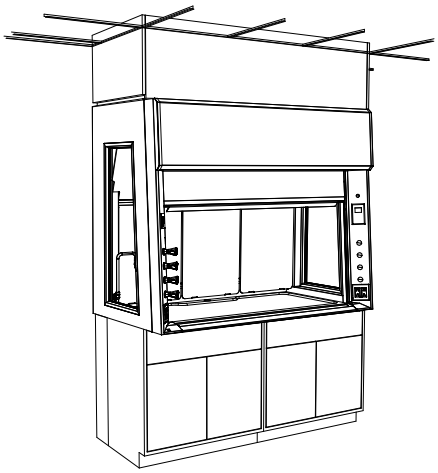

Fume Hood Ceiling Enclosures are designed to fill the space between the top of the hood and the ceiling to provide a finished appearance. They are available in height from 9" to 30" in 1" increments and in lengths to match the hoods.

All are provided with a removable front panel for easy access to the light fixture.

Ceiling Enclosure V T C E M ☐☐ ☐☐ ☐☐ - ☐☐

Enclosure Type

CE = Ceiling Enclosure

Material

M = Powder Coated Steel

Enclosure Height

09 = 09"	10 = 10"	11 = 11"	12 = 12"	13 = 13"
14 = 14"	15 = 15"	16 = 16"	17 = 17"	18 = 18"
19 = 19"	20 = 20"	21 = 21"	22 = 22"	23 = 23"
24 = 24"	25 = 25"	26 = 26"	27 = 27"	28 = 28"
29 = 29"	30 = 30""			

Enclosure Depth

24" = 24
24" for V50-V53

48" = 48
48" for V55-V58

Hood Overall Length

4'-0" / 48" = 48
5'-0" / 60" = 60
6'-0" / 72" = 72
8'-0" / 96" = 96

Finished Back = FB
for V50-V53 models only

Option

Distillation Racks for TruView Hoods

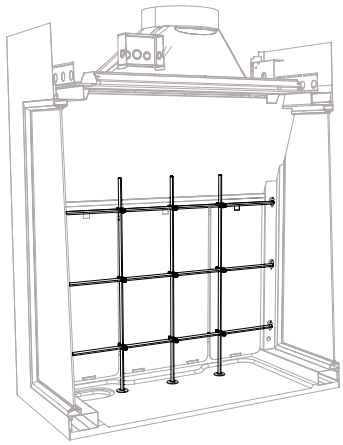

TruView Fume Hoods may be prepared to accept a lattice style distillation rack. The rack consists of vertical and horizontal ½" diameter rods, fastened with rod clamps to form a lattice.

Rods are available in Stainless Steel or Aluminum.

Rod Assemblies must be Ordered Separately. *(see below)*

Type 304 Stainless Steel Rods Bench Hoods *48"-60" High Interior*	Hood Length	Aluminum Rods Bench Hoods *48"-60" High Interior*
VTDRS480148	4'-0" / 48"	**VTDRA480148**
VTDRS480160	5'-0" / 60"	**VTDRA480160**
VTDRS480172	6'-0" / 72"	**VTDRA480172**
VTDRS480196	8'-0" / 96"	**VTDRA480196**

Worktops for TruView Hoods with Distillation Racks

VTBTR012448	4'-0" / 48"	3 Holes for Distillation Rack Mounting
VTBTR012460	5'-0" / 60"	4 Holes for Distillation Rack Mounting
VTBTR012472	6'-0" / 72"	4 Holes for Distillation Rack Mounting
VTBTR012496	8'-0" / 96"	6 Holes for Distillation Rack Mounting

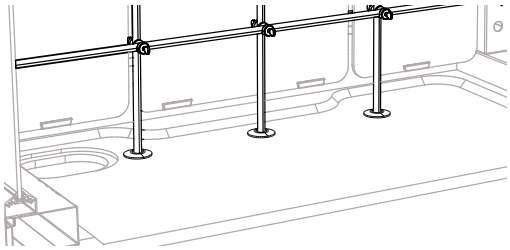

TruView Service Fittings

Service Fittings Part Number

V T V W [ ] [ ] [ ] - [ ] (Option)

CW90 - Designed to be used in front locations only. If selected for rear, it will not align with cup sink. (GSCW suggested for rear)

GSCW - Best if located at rear of hood or top location if in the front post, to avoid interference with services located directly above it.

Valve Brand
required
W = WaterSaver

ADA Selection
if applicable
ADA = ADA Handle if Applicable

Service
required
A = Air
G = Gas
V = Vacuum
N = Nitrogen
45CW = Cold Water with 45° outlet
90CW = Cold Water with 90° outlet
GSCW = Cold Water with 6" gooseneck outlet

Vacuum Breaker
if applicable
Front Panel = **FP_ _**
In-line = **IL_ _**
Fixture Install = **TVIN**

Hood Side
Select for WaterSaver
Left = **L**
Right = **R**

Service Fitting Colors & Index Symbols

Service	Fitting Color	Index Symbol	Index Color	Letter Color
Air	Orange	AIR	Orange	Black
Gas	Blue	GAS	Blue	White
Vacuum	Yellow	VAC	Yellow	Black
Nitrogen	Brown	NIT	Brown	White
Cold Water	Green	CW	Green	White

Plumbing

All TruView fixtures have the option to be installed with plumbing routed either up or down. Plumbing materials consist of hoses which may be Braided Stainless Steel or Reinforced PVC contingent on fixture manufacturer and type as noted in the chart.

Service	WATERSAVER
Air	Reinforced PVC
Vacuum	Reinforced PVC
Nitrogen	Reinforced PVC
Gas	Braided S/S w/ PTFE Core
Cold Water	Reinforced PVC

Vacuum Breaker Options

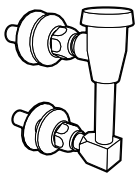

Vacuum Breaker Assembly
for elevated mounting in top front panel of fume hood.

FP03 - Includes WaterSaver front panel mounted vacuum breaker for fascia-mounted fixtures and 55" outlet hose

FP04 - Includes WaterSaver front panel mounted vacuum breaker for rear Cold Water with 6" Gooseneck outlet and 76" outlet hose

In-line Vacuum Breaker
for elevated mounting in side wall of fume hood

IL03 - Includes WaterSaver in-line vacuum breaker for fascia-mounted fixtures and 55" outlet hose

IL04 - Includes WaterSaver in-line vacuum breaker for rear Cold Water with 6" Gooseneck outlet and 76" outlet hose

KEWAUNEE

TruView Service Fittings

Front Load Needle Valves — Front Location

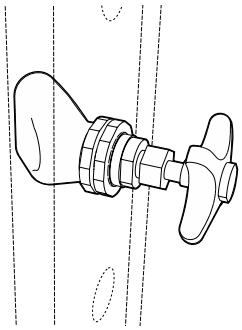

VTVW_L
Front Load Valve - Left Hand

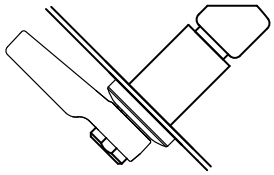

VTVW-ADA

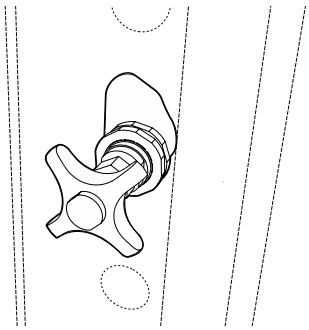

VTVW_R
Front Load Valve - Right Hand

Valve Handles

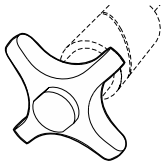

WaterSaver
4-Arm Handle
Chrome Plated Brass

Service Outlets

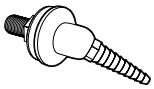

WaterSaver
Angled
Color Coded Brass

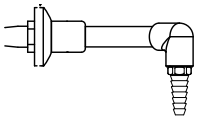

VTVW-90CW
WaterSaver 90° CW Outlet
4¼" Stand-Off

Minimum Spacing **3½"**
vertical distance between fittings

Front Load Valves — Back Location

VTVW-GSCW	Gooseneck Outlet	83" Inlet Hose, 48" Outlet Hose
VTVWADA-GSCW	Gooseneck Outlet	83" Inlet Hose, 48" Outlet Hose

Plumbing Thread Connections

WaterSaver - All fixture and hose threads are ⅜" NPT Pipe Thread.

Back Location Water Outlets

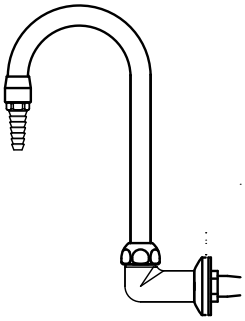

VTVW-GS
6" Rigid/Swing Gooseneck
Color Coded Brass

Fume Hood Base Cabinets

DIMENSIONAL VIEW

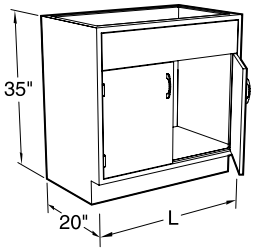

Specifications

Standing Height Steel and Wood Fume Hood Base Cabinets are 35" high and a nominal 20" deep. ADA Height Steel Fume Hood Base Cabinets are 32" high and 20" deep; ADA Height Wood Fume Hood Base Cabinets are 32½" high and nominal 20" deep. Lengths as shown.

See the **Research Collection Steel** and **Signature Series Wood Catalogs** for available styles and details.

Fume Hood Solvent Storage Cabinet Specifications

Solvent Storage Cabinets are specifically designed for the storage of flammable and combustible liquids. Both steel and wood cabinets meet UFC, OSHA and NFPA No. 30-1993 construction standards and are UL listed. All Solvent Storage Cabinets are labeled:

CAUTION FLAMMABLE – KEEP FIRE AWAY

in English, Spanish, and French.

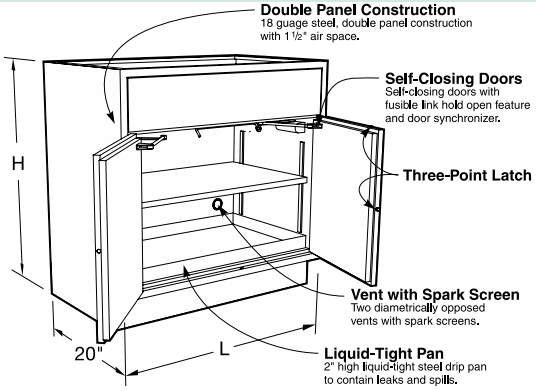

Fume Hood Acid Storage Cabinet Specifications

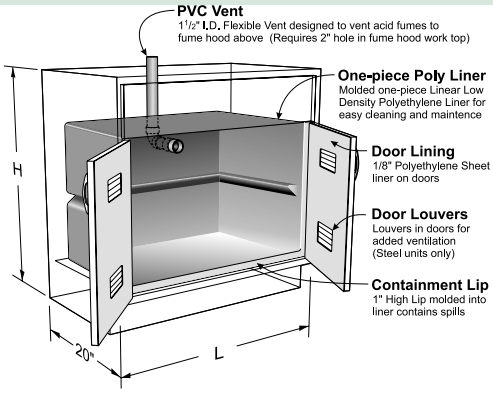

Acid Storage Fume Hood Base Cabinets are specifically designed for the storage of corrosive chemicals. They are available in either steel or wood. These cabinets are lined with a molded one piece linear low density polyethylene tub with coved corners and a 1" lip at the bottom front. The cabinet doors are lined with ⅛" sheet polyethylene and the doors are latched using a nylon roller catch.

Fume Hood Vacuum Pump Storage Cabinet Specifications

Vacuum Pump Storage Fume Hood Cabinets are designed without a bottom to allow vacuum pumps and other equipment to be rolled in or out of the cabinets. The interior is lined with 1" thick neoprene foam for sound deadening and easy cleaning. Each cabinet is furnished with a 120 VAC, 20 amp, duplex receptacle mounted on the inside cabinet back and a pilot lighted toggle switch mounted in the top front rail. (Wiring is not included.)

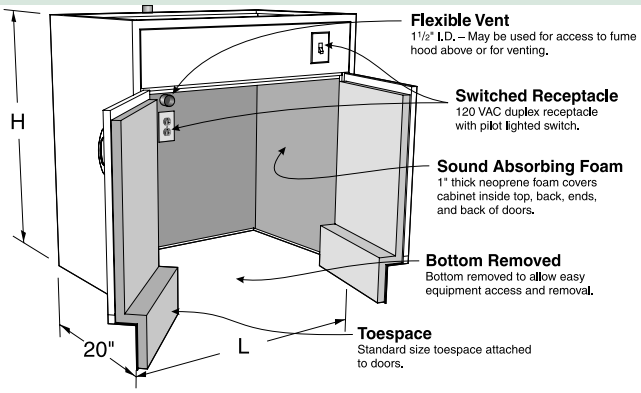

KEWAUNEE

Venturi Fume Hood Accessories

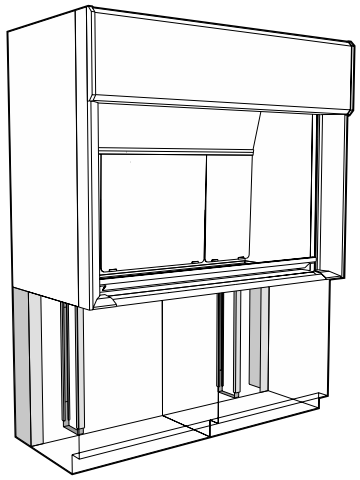

Specifications

Base Cabinet Rear Fillers are designed to close opening between wall and rear of fume hood base cabinet. They are available in both steel and wood in sizes shown.

Kemstruts are steel frame assemblies consisting of steel channels and spacers designed to provide support and stability to the rear overhang of fume hood worktops and provides mounting struts for plumbing and electrical service lines.

Steel Rear Fillers

Part Number	D	H
BRSC200009N-0000	9"	20½"
BRSC200015N-0000	15"	20½"
BRSC200021N-0000	21"	20½"
BRSC320009N-0000	9"	32"
BRSC320010N-0000	10"	32"
BRSC350009N-0000	9"	35"
BRSC350010N-0000	10"	35"
BRSC350015N-0000	15"	35"
BRSC350016N-0000	16"	35"
BRSC350021N-0000	21"	35"
BRSC350022N-0000	22"	35"

Wood Rear Fillers

Part Number	D	H
X40W360109N-00_0	9"	36"
X40W360115N-00_0	15"	36"
X40W360121N-00_0	21"	36"

Kemstruts

Part Number	D	H
K12M200109A	9"	20½"
K12M200115A	15"	20½"
K12M200121A	21"	20½"
K12M320109A	9"	32"
K12M320110A	10"	32"
K12M350109A	9"	35"
K12M350110A	10"	35"
K12M350115A	15"	35"
K12M350116A	16"	35"
K12M350121A	21"	35"
K12M350122A	22"	35"

Fume Hood Accessories & Canopy Hoods

Flexible Vent

F-9100-00-FIN Vent Kit

Designed for use with Acid Storage and Vacuum Pump Storage cabinets to vent through fume hood worktop. Includes: 1½" IPS threaded stub for mounting in 2" diameter hole in cabinet back, 90 degree elbow, 36" long flexible pipe, and 18" long 1½" IPS straight pipe. (requires 2" diameter hole in worktop) Both the flexible pipe and the straight pipe may be cut to size.

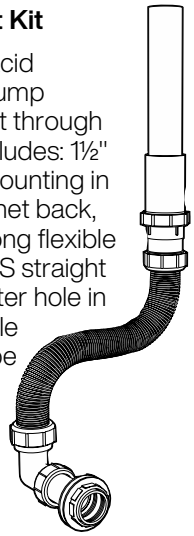

Variable Power Controller

0767-00 Powerstat

Ratings:

Input: 120 VAC
50/60 Hz, single phase

Output: 0-120 VAC
or 0-240 VAC

Max. Load: 10 amp.

Requires separate on/off control.

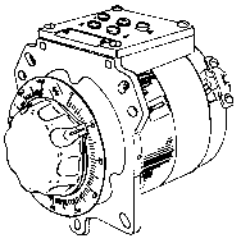

Canopy Hoods

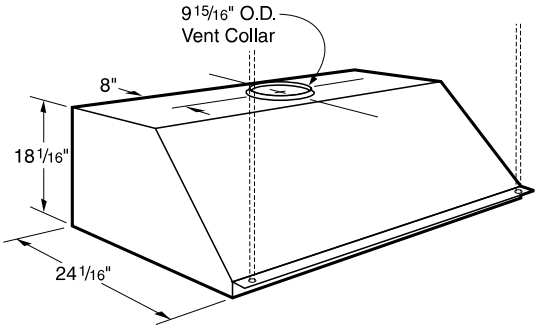

Canopy Hoods are useful for conducting heat out of laboratories, and can be mounted over tables where hot plates or other heat generating apparatus is located. They are fabricated of cold rolled steel, phosphate coated with a baked chemical resistant, synthetic resin finish, or of type 304 stainless steel. They are available 3 feet, 4 feet, 5 feet , 6 feet and 8 feet long. The painted steel canopys are available with or without a lining of Kemglass. Each canopy hood is furnished a with 9 15/16" O.D. vent collar. (8 foot canopies are furnished with two duct collars, 48" on center.) (½" diameter support rods to the ceiling are not included.)

Unlined Painted Steel	Unlined Stainless Steel	
CNPHM182436	**CNPHS182436**	36"L
CNPHM182448	**CNPHS182448**	48"L
CNPHM182460	**CNPHS182460**	60"L
CNPHM182472	**CNPHS182472**	72"L
CNPHM182496	**CNPHS182496**	96"L

KEWAUNEE

Pre-wired and Pre-piped

Specifications:

Pre-wired — Venturi Fume Hoods may be factory pre-wired using flexible metallic conduit to a single junction box at the top of the hood for one-point field connection. Standard pre-wired configurations are UL listed. Contact Kewaunee Engineering for non-standard electrical requirements.

A "U" option must be selected for fume hoods to be UL 61010A-1 listed.

Pre-piped — The fume hoods may be factory pre-piped when pre-piped fittings are selected. Piping is routed to the rear of the hood on the side where fittings are installed; hoods with fittings on both ends have two connection points. Piping may be routed to the top or bottom of the hood, as specified.

Note: Standard joints are soldered; brazed joints are available upon special request.

Standard ⅜" Piping Materials

Water — Hard Drawn Type L Copper
Gas — Black Steel
Vacuum — Hard Drawn Type L Copper
Air — Hard Drawn Type L Copper
DI Water — PVC
Other — Hard Drawn Type L Copper
(Copper connections made with lead free solder, black steel connections are threaded)

Typical Walk-In Hood

(Piped to top of hood)

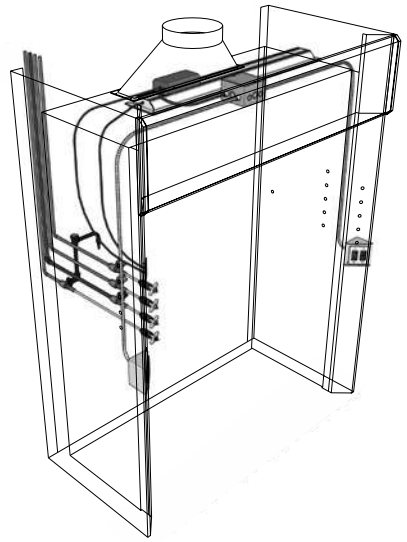

Typical Bench Hood

(Piped to top of hood)

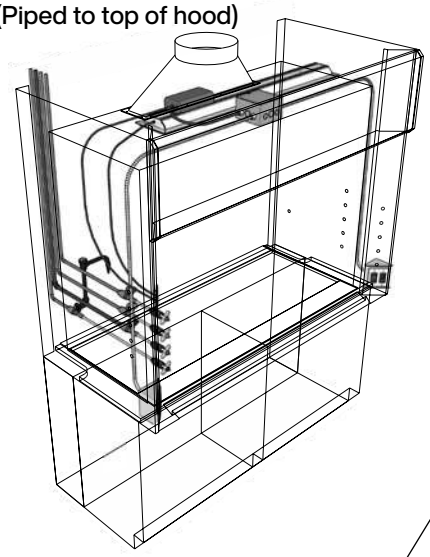

Typical Fume Hood with Plumbing & Wiring Connections

(Piped to bottom of hood)

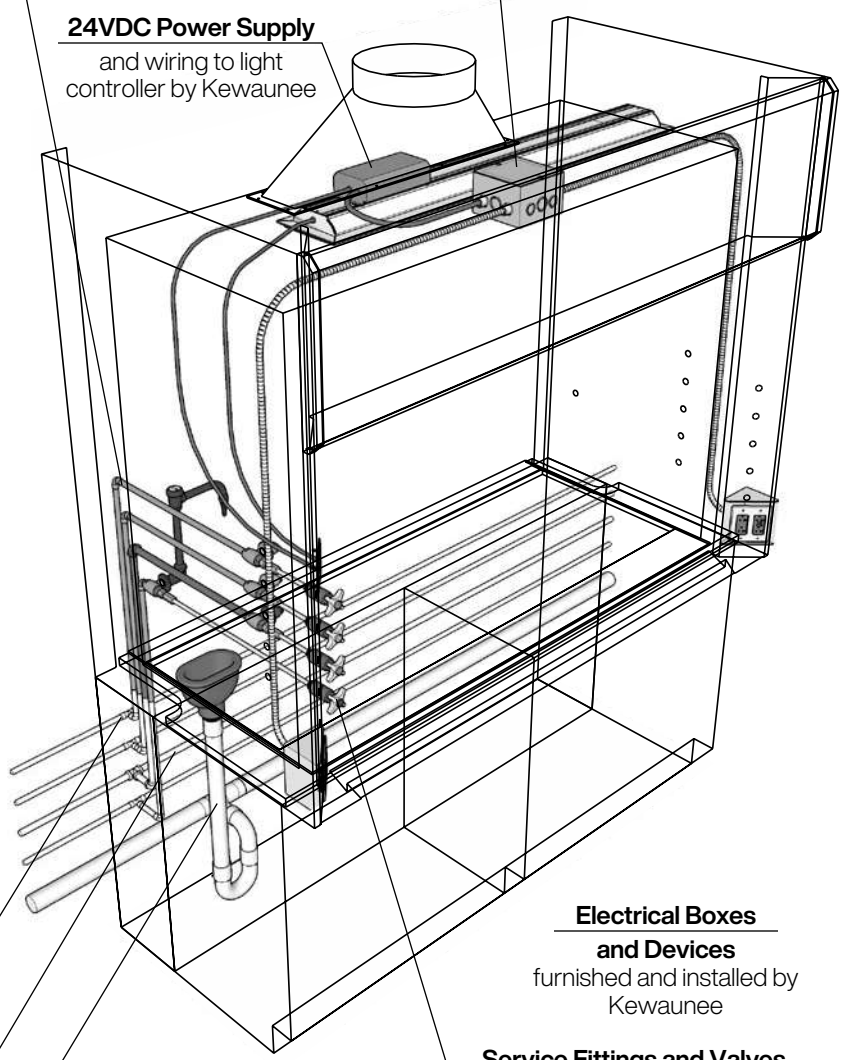

Recommended Fume Hood Work Practices

A Safe, Healthy Work Environment

Most people think of a scientific laboratory as a clean, safe place to work. But for the people who work there every day, the typical laboratory—filled with flammable and toxic chemicals, harmful vapors, gases and corrosive acids—can be an extremely hazardous place.

By containing harmful contaminants and venting them out of the work area, laboratory fume hoods help create and maintain a safe, healthy environment for you—the laboratory worker—and your co-workers.

Your fume hood is designed to protect you by providing an enclosed work area that has an air barrier between you and the harmful materials you work with. Behind this protective air barrier, the hood's directional air flow carries harmful contaminants away from you toward the rear of the hood. Also, the properly tuned hood and its exhaust system dilutes the contaminants with large volumes of air and safely exhausts them.

If anything interferes with the protective air barrier of the fume hood or disrupts the proper air flow, the hood's ability to protect you and your co-workers may be seriously reduced.

Since 1906, we at Kewaunee Scientific Corporation have been designing and building laboratory fume hoods to help keep laboratory work environments safe and healthy. Based on our knowledge and experience, we've outlined a number of basic safety practices for you and your co-workers to follow when choosing, using and maintaining laboratory fume hoods. The following practices are based on the superior design found in Kewaunee Supreme Air Venturi hoods.

We urge you to familiarize yourself with these recommended fume hood work practices and with your facility's safety guidelines and standard operating procedures. We think you'll agree—it's the best way to help ensure a safe, healthy work area for you and your co-workers.

The Right Fume Hood for the Job

If your laboratory fume hood is to properly protect you, it must be designed for the type of work you're doing.

For example, if you work with radioisotopes, carcinogens or other toxic materials for which decontamination is important, you should always use a hood with a non-absorbent lining that is designed to be easily decontaminated.

If you work with large volumes of flammable substances, you may need a hood equipped with such features as a non-absorbent lining, explosion-proof lights and electrical receptacles, a fire-suppression system, and a spark-resistant exhaust fan.

If you use perchloric acid heated above ambient temperature then you need a fume hood and exhaust system specifically designed for this hazard.

To be sure your fume hood is the right one for the work you're doing, contact your local Kewaunee sales representative.

Venturi Fixed Baffle Configuration

Kewaunee Supreme Air Venturi fume hoods are provided with a fixed baffle configuration. **(See Figures 1 and 2.)** The slots in the baffle are optimized to provide the best performance.

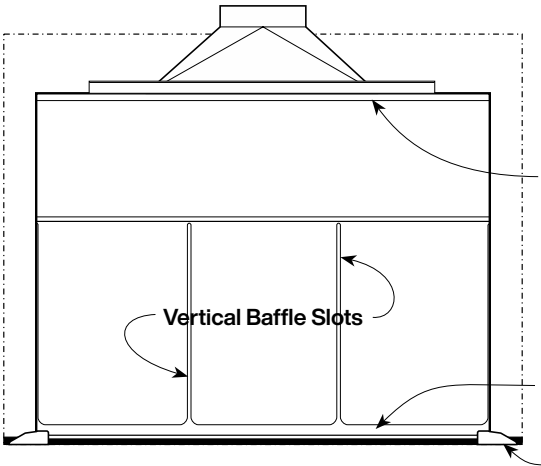

Figure 1. *Face Section View*

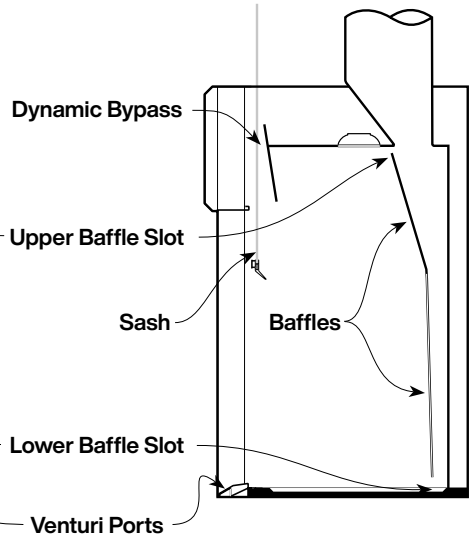

Figure 2. *End Section View*

KEWAUNEE

Recommended Work Practices (continued)

Checking Fume Hood Performance

To confirm that your fume hood exhaust system is working properly, the Occupational Safety and Health Administration (OSHA) recommends that all hoods be equipped with an airflow monitor. Inspect both the monitor and the system periodically for malfunctions.

For some applications a pressure gauge connected to the exhaust duct is sufficient. The safe pressure range should be marked on the gauge. When using more hazardous contaminants, a fume hood alarm such as the Kewaunee Air Alert 300 or Air Alert 600 Digital Face Velocity Alarms should be used. These alarms provide both a visual and audible warning when the exhaust flow becomes unsafe.

If your hood is equipped with a variable air volume controller (VAV) with alarm capabilities, then an additional alarm is not necessary.

You should have a qualified technician thoroughly test your fume hood before you use it the first time and at least once a year after that. You should also have your hood tested after any modification to the laboratory ventilation system or other factors which may affect hood exhaust capability or room air flow patterns.

Maintaining the Protective Air Barrier for a Safe Work Area

When you stand in front of a laboratory fume hood, the air passing your body to enter the hood forms a zone of low air pressure directly in front of you which extends into the hood. Since contaminants may enter this turbulent area from inside the hood, you should keep all hazardous materials at least six inches inside the hood, behind the protective air barrier. **(See Figure 3.)**

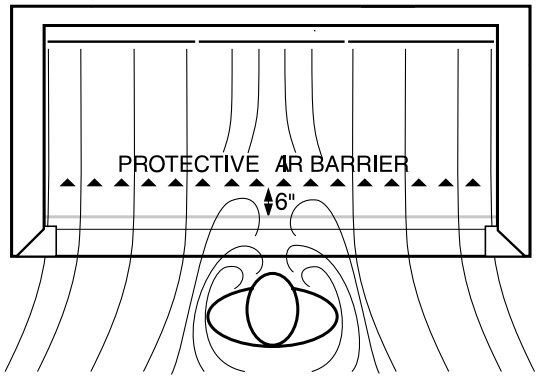

Figure 3

Formation of Protective Air Barrier

The farther behind the fume hood protective air barrier you place the source of contaminants, the greater the protection the hood provides. Therefore, place the equipment and contaminants as far back inside the hood as possible, being careful not to block the slots in the rear baffle. **(See Figure 4.)** Never place apparatus so far back that you have to put your head into the hood while the procedure is generating contaminants.

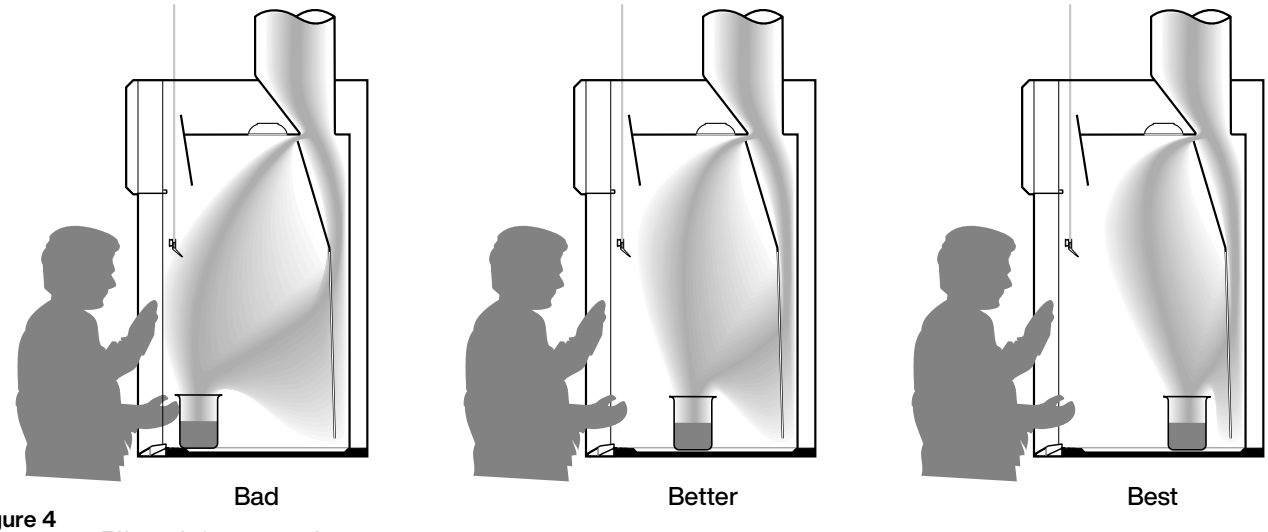

Figure 4

Effect of placement of contaminate source

Recommended Work Practices (continued)

Maintaining the Protective Air Barrier for a Safe Work Area (continued)

Large containers or equipment such as furnaces, incubators and oil baths often interfere with air flow inside the fume hood by causing lazy air and reverse flows which may affect airflow patterns. Placing large, bulky equipment on legs will help improve airflow patterns by allowing air to circulate beneath the equipment. **(See Figure 5.)**

The fume hood should not be used for storage of chemicals and apparatus. Remove all unnecessary containers and equipment from the hood.

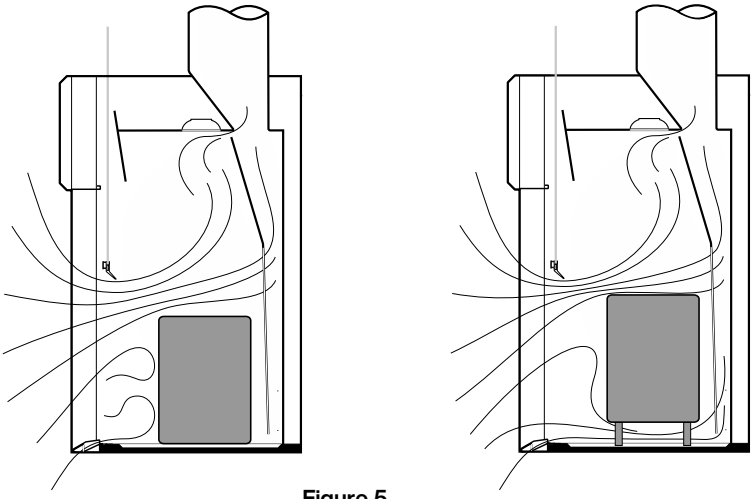

Figure 5
Effect of large equipment

The air velocities used to provide containment in fume hoods are relatively low and the air flow patterns are easily disrupted. Avoid making rapid movements while working at the hood or while walking past the hood.

When working at a fume hood, always open the sash only as far as needed to access to the work area. The lowered sash increases the distance **(D in Figure 6)** between your breathing zone and the area where contaminants may escape. In addition the smaller hood face area makes the hood less susceptible to room drafts and other external air disturbances.

The sash also provides protection by replacing part of the protective air barrier with a solid barrier against contaminants and splashing chemicals.

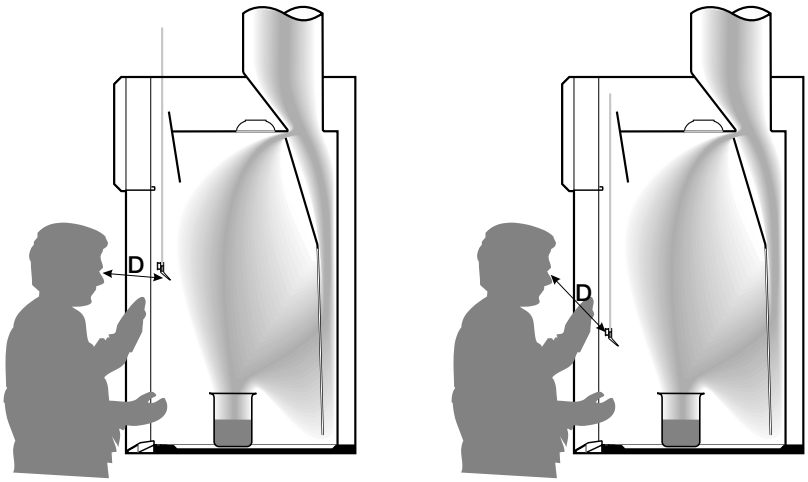

Figure 6
Effect of lowering the sash

If the hood has a sash stop to limit sash travel or is marked for a safe sash height, the sash should not be raised above this point while contaminants are being generated within the hood.

If continuous access is not needed to the inside of the fume hood, the sash should be closed completely. **(See Figure 7)** A closed sash provides protection from flying debris or a runaway reaction. It also eliminates the effects of room drafts or other adverse air currents.

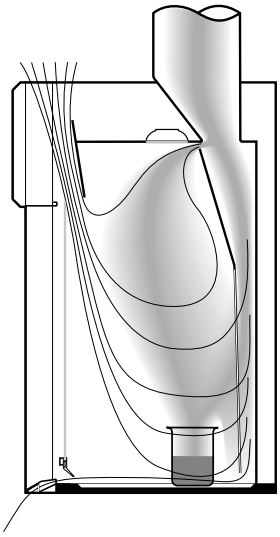

Figure 7 *Airflow through By-Pass with Sash Closed*

If your hood has horizontal sashes, be sure they are all in place when working with contaminants inside the hood. Operating the hood with any of the sashes removed reduces the protection they provide by decreasing the velocity of the air entering the hood face. If you remove any hood sashes while setting up equipment, be sure to replace them before beginning the actual procedure. On hoods with a combination vertical/horizontal sash, the hood should be operated either with the vertical frame closed while the horizontal panels are open or the horizontal panels closed while the vertical frame is open.

KEWAUNEE

Recommended Work Practices (continued)

For More Information

We at Kewaunee Scientific hope these guidelines will be helpful to you as you choose, use and maintain your laboratory fume hood. If you have questions we haven't answered in this section, please contact your local Kewaunee sales representative.

Fume Hood Safety Checklist

- ☐ The hood is the correct type for the work to be performed.
- ☐ The airflow monitoring device indicates adequate airflow.
- ☐ There are no unnecessary chemicals or equipment in the fume hood.
- ☐ All chemicals and equipment are at least six inches behind the plane of the sash.
- ☐ All procedures are performed with the laboratory worker's head remaining outside the hood.
- ☐ Large equipment is placed on stands with legs.
- ☐ The sash is not above the safe operating height while the fume hood is in use.
- ☐ The sash is open only as far as needed.
- ☐ Safety equipment is close to the hood in case of fire or explosion.
- ☐ All laboratory workers are following the procedures outlined in these instructions, as well as any additional fume hood safety guidelines supplied by your laboratory safety manager.

KEWAUNEE

Glossary of Hood Terms and Definitions

Access opening — part of the fume hood or glove box through which work is performed - entrance.

ACGIH — American Conference of Government Industrial Hygienists

Air foil — curved or angular member at front of hood designed to reduce air turbulence.

Air volume — quantity of air normally expressed in cubic feet per minute (cfm).

Anemometer — instrument for measuring low air velocities.

ASHRAE — American Society of Heating, Refrigerating and Air Conditioning Engineers

Auxiliary air — air delivered directly to fume hood to reduce room air consumption — sometimes called supply or supplemental air.

Baffle — panel or panels located at rear of the hood interior which aid in distributing the flow pattern of air into and through the hood.

By-pass hood — hood which contains a by-pass and, usually, air foils — also called a constant volume hood.

CFM — Cubic Feet per Minute — unit of air volume measurement.

Cross draft — a flow of air that blows into or across the hood face.

Damper — device installed in duct to control air volume — can either be pneumatically, electrically, or manually operated.

Differential Pressure — difference in static pressure between two locations.

Duct — round, square or rectangular tube used to enclose moving air.

Duct velocity — speed of air moving in duct (measured in FPM).

Dynamic barrier by-pass — a louvered front-to-back by-pass system located above the top sash that introduces by-pass air behind the operating sash plane to provide a buffer zone between the contaminated hood interior and the hood operator.

Face — front opening of hood through which the user works.

Face velocity — speed of air moving into fume hood at face opening usually expressed in units of feet per minute.

Fan — air moving device consisting of a motor, impeller and housing – sometimes called a blower.

FPM — Feet Per Minute – measurement of air velocity.

Fume hood — a ventilated, enclosed work space, with an open front, intended to capture, contain and exhaust airborne contaminants generated within it — also called a laboratory hood.

LEV Hood — Low Exhaust Volume Hood – sometimes called a high performance fume hood, are energy efficient fume hoods that contain when tested at 60 FPM or less with a sash full open.

Liner — material used in the interior of the hood which is exposed to contaminants.

Louvered panel — a panel with louvers to allow by-pass air to enter the hood when the sash is closed.

Make-up air — free or available air needed to permit fume hood to develop face velocity.

Manometer — device used to measure air pressure differential — usually calibrated in inches of water.

Negative Pressure — pressures lower than atmospheric pressure. (Less than one atmosphere.)

NFPA — National Fire Protection Association

OSHA — Occupational Safety and Health

Glossary of Hood Terms and Definitions

Administration Government organization created to assure safe and healthful working conditions.

Perchloric Acid a colorless, syrupy hygroscopic liquid, $HClO_4$, used chiefly as a reagent in analytical chemistry. Explosively unstable when crystallize or when in contact with combustible materials at elevated temperatures.

Pitot tube device for measuring velocity of air in a duct.

Positive pressure pressures higher than atmospheric pressure. (More than one atmosphere.)

Restricted by-pass fume hood basic type of hood design with limited by-pass area. Commonly used in conjunction with "VAV" Variable Air Volume controls.

Safety shield horizontal sliding transparent panel at face of hood which the user places in front of his body to protect himself from small explosions inside of hood.

Sash movable panel set in hood face, usually transparent and can be either vertical rising or horizontal sliding.

SEFA **Scientific Equipment & Furniture Association** – an association founded to promote the scientific equipment and furniture industry and to improve the quality, safety and timely completion of laboratory facilities in accordance with customer requirements.

Side walls (End walls) The area between the interior hood liner, and the exterior end panel. (4" nominal dimension)

Smoke candle device producing large quantities of smoke for testing hoods — also called smoke bomb.

Static pressure air pressure exerted perpendicular to the direction of flow, usually expressed in units of inches of water.

Superstructure part of hood assembly that excludes worktop, base cabinets, auxiliary air chamber, and plumbing and electrical fixtures.

Supplemental (supply) air air delivered directly to fume hood to reduce room air consumption — also called auxiliary air.

UFC **Unified Facilities Criteria – a government program that unifies all technical criteria and standards pertaining to planning, design, construction, operation and maintenance of real property facilities.**

V-Belt Drive Fan fan on which the motor is connected to the impeller wheel via, a v-belt, sheaves, and an impeller wheel shaft. Allows the impeller wheel speed to be varied by using a adjustable motor sheave.

Variable air volume (VAV) type of fume hood that utilizes controller to maintain constant face velocity by adjusting blower motor speed or balance damper in response to changes in sash position.

Velocity speed of air — measured in feet per minute.

Vertical Bypass An air management panel located within the hood structure designed to introduce air behind the operating sash plane to provide a buffer zone between the contaminated hood interior and the operator. Vertical bypasses are specifically designed for LEV hood use within a VAV system.

Walk-in hood floor-mounted, full height hood designed to accommodate tall apparatus and permit roll-in of instruments and equipment.

KEWAUNEE

Typical Fume Hood Installations

KEWAUNEE

Fume Hood Testing Facilities

Kewaunee's State-Of-The-Art
Fume Hood Testing Facility.
Statesville, North Carolina

Testing Protocols and Standards

ASHRAE 110 – 2016

ANSI / AIHA Z 9.5

EN 14175 – 3
(European Fume Hood Standard)

HAM
(Human as Mannequin)
variant of **ASHRAE 110**
(USEPA & UCal–Davis)

Our state-of-the-art testing facility is capable of duplicating most laboratory environments. It allows us to perform the rigorous testing protocols necessary to ensure safe performance of custom designs.

VENTURI

High Performance Fume Hoods

Kewaunee Scientific Corporation is dedicated to manufacturing high quality products for the laboratory marketplace. We offer **Total Laboratory Solutions, Innovative Designs, and Technological Expertise** with a worldwide distribution network to provide laboratories that are truly World Class.

Laboratory Products from Kewaunee®:

ALPHA® – Adaptable Casework System

ALPHA Columns – Expandable Workstations

ALPHA Overhead Carrier Systems

BasikBench® – Simple 4-Leg Benches or Tables

Element Bench – Efficient Benches with Plumbed Posts

Enterprise® – Free-Standing Workstations

Evolution® – Column Based Workstations

Kemresin® – Epoxy Resin Counters & Sinks

Kewaunee Matrix® – Educational Stations

Research Collection® – Steel Casework

Signature® Series – Wood Casework

Supreme Air® – Fume Hoods

For our complete product offering, specifications, catalogs, brochures, case studies, and dealer list, go to kewaunee.com, or contact your local sales representative directly.

Kewaunee Scientific Corporation
P.O. Box 1842 ▪ Statesville, NC 28687-1842
704-873-7202 ▪ kscmarketing@kewaunee.com ▪ kewaunee.com

Kewaunee Labway India Pvt. Ltd.
No. CA-9A, 2nd Floor, Jigani Link Road
Jigani, Bangalore 562 106, India
Phone: 9180-27826725 ▪ Fax: 9180-27826724
Web Site: kewaunee.in

Kewaunee Labway Asia Pte. Ltd.
194 Pandan Loop, #06-22
Pantech Business Hub, Singapore 128 383
Phone: 65-6773-0288 ▪ Fax: 65-6773-2322

Kewaunee, Alpha, BasikBench, Enterprise, Evolution, Kemresin, Kewaunee Matrix, Research Collection, Signature, and Supreme Air are registered trademarks of Kewaunee Scientific Corporation

KEWAUNEE®

© Copyright 2026

Digital Version 07/14/26