SUPREME AIR

Laboratory Fume Hoods

KEWAUNEE®

Supreme Air Fume Hoods

Kewaunee's Fume Hood Offering

- Traditional Constant Volume
- VAV
- Dynamic Barrier - Ultra Low Flow
- ADA Accessible
- Full Access Walk-in
- Isotope
- Perchloric Acid
- Distillation
- Demonstration
- Teaching
- Custom Enclosures
- Liners
  - Kemglass - FRP
  - Stainless Steel
  - Phenolic Resin

Contents

Fume Hood Construction 3
Guide to Fume Hood Selection 5
Bench Fume Hoods 10
Walk-In Fume Hoods 30
Auxiliary Air Chambers 40
Fume Hood Option Availability 42
Fume Hood Options 43
Fume Hood Worksurfaces 47
Ceiling Enclosures & Trim 49
Pre-Wired and Pre-Piped 50
Cupsinks, Fittings, Fixtures, Sinks, Steam Baths & Alarms 51
Base Cabinets 57
Filters & Canopy Hoods 58
Teaching & Demonstration Hoods 59
Technical Data 61
General Fan Information 68
Fan Recommendation Charts 70
V-Belt Fan Charts 74
Fan Dimensions 76
Fan Accessories 77
Recommended Fume Hood Work Practices 78
Glossary of Hood Terms and Definitions 82
Typical Installations 84

H30 Walk-in Fume Hood

H05 Vertical Rising Sash Bench Hood

Supreme Air Fume Hood Construction

The design is based on rigid frame construction that assures a solid installation and low vibration and sound levels. Access panels are easily removable to access service lines and fittings. Radius corner posts and airfoils, plus, easy operator control of interior baffle settings assure a high level of comfort, safety and efficiency.

Given the variety of models available and the comprehensive option packages to be selected, this new generation of fume hoods can be tailored to the application needs of your modern laboratory. Aesthetically pleasing curved airfoils, vision sash panels, contemporary controls and devices, designer colors and combinations make a hard-working laboratory safety device into an attractive part of the total laboratory environment.

Energy saving lighting with exterior relamping

- *Dual-lamp, low profile T8 LED light fixture*
- *Optional special purpose lighting*

Task specific liner options

- *Phenolic resin*
- *Kemglass*
- *Type 304 Stainless Steel*
- *Low profile, self-gasketing, interior access panel — removable without tools*

Customizable accessory offering

- *A full array of service fittings and electrical fixtures*
- *Monitoring and safety alarms*
- *Pre-piping and pre-wiring*
- *UL listed when pre-wired per UL 61010A-1*
- *UL 1805 classified with Kemglass or Stainless Steel liner*

Low profile PVC sash tracks

- *Smooth sash operation*
- *Reduced air turbulence*
- *Seals the interior side panel*

Easy operating full vision sash with:

- *Full length painted aluminum handle for neat, clean appearance and streamline air features*
- *Exclusive sash leveling and alignment features*

Top front panel available as:

- *Solid panel with integral louvers*
- *Vision panel with integral louvers* (shown)
- *Solid panel with Sight-tight Chevron by-pass grille*
- *Vision panel with Sight-tight Chevron by-pass grille*

Independent frame construction

- *Rigid structural frame*
- *Allows liner panel replacement*
- *Stainless steel fasteners concealed with corrosion resistant caps*

Narrow-radiused corner posts

- *Enhances aerodynamic air flow*
- *4" width creates more interior work space*

Radiused air foil

- *Streamline air flow — low turbulence*
- *Heavy gauge steel for durability*
- *Available painted or in stainless steel*

Exclusive Kemresin worktops

- *Dished worksurface available in multiple colors*
- *Many other options, including stainless steel*

KEWAUNEE

Dynamic Barrier Fume Hood Features

The Dynamic Barrier fume hood requires over 70 percent less exhaust air volume than a traditional by-pass fume hood. The design conserves natural resources while saving thousands of dollars per fume hood on initial HVAC system requirements and on annual energy consumption.

The Dynamic Barrier fume hood is an ultra low constant volume design based on Kewaunee's Supreme Air fume hood line. Its basic size, shape, and construction is the same as the standard Supreme Air design; but, it incorporates new and innovative features that reduce exhaust air usage while increasing the ease of use and maintaining unsurpassed containment.

Based on proven constant volume technology, the Kewaunee Supreme Air Dynamic Barrier fume hood avoids the requirements of expensive, high maintenance alternatives. It has been vigorously tested to ANSI/ASHRAE 110-1995 guidelines. In addition, the Dynamic Barrier fume hood has been subjected to stringent dynamic testing including walk-by traffic, cross-drafts, and multiple breathing zone challenges, while maintaining unsurpassed containment.

Double vertical sash design *allows 37" opening height for apparatus setup while projecting only 9" above the hood.*

Frameless upper sash *for unobstructed view.*

Low profile sash frame *offers easy access through horizontal panels.*

Six-panel combination lower sash *provides multiple protective working configurations.*

Sash stop at 10" high *provides full width work opening while maximizing splatter and fume barrier for user protection.*

Aerodynamically shaped lower sash handle *provides smooth airflow through vertical opening.*

UL 1805 Listed *when specified with Kemglass or Stainless Steel liner*

Dynamic Barrier by-pass *bathes area behind sash with uncontaminated air maximizing user protection.*

Static pressure averaging mechanism *provides accurate face velocity readings regardless of sash positioning.*

Air Alert 600 Fume Hood Monitor *provides a visual one-hour timeline of fume hood performance.*

Service ports *provide convenient, safe passage of wires and tubes for equipment connections.*

Flush sill *for unobstructed access through vertical opening.*

UL 61010A-1 Listed *when pre-wired*

Guide to Fume Hood Selection

Introduction

Selection of the proper type of fume hood to use in a laboratory should be based upon two interrelated considerations:

1. The hood must allow the user to perform the work in a safe, efficient manner.
2. The need to reduce air conditioning cost.

The hood must be large enough to accommodate the required containers and apparatus within the prescribed safe work area of the hood (6" behind the plane of the sash). The configuration of the hood should be such that containers can be moved in and out of the hood easily. The sash opening of the hood must allow sufficient access for safely manipulating the containers and apparatus within the hood. The interior of the hood must resist the corrosive effects of chemicals. The hood understructure should provide for storage of the required chemicals for the work being done in the hood.

The total cost of a hood is greatly affected by its exhaust air requirements. The annual cost of heating and cooling the air exhausted by the hood can be as high as the initial cost of the hood itself. Choosing the proper hood type and sash configuration can significantly reduce these costs.

Types of Fume Hoods

Open by-pass fume hoods are designed for operation on constant air volume exhaust systems. The air by-pass provides for an alternate route for air to enter the hood as the sash is closed. The size of the by-pass is set so that, as the sash is closed, the velocity of the air increases to no more than three and one half times the velocity with the sash fully open. As a result, the static pressure loss through the front opening of these hoods is insignificant when compared to the pressure loss through the rear baffle and duct entry. Since the hood static pressure and the exhaust volume remain essentially constant, regardless of the sash position these hoods are classified as **Constant Volume** fume hoods.

Low constant volume fume hoods use a restricted sash opening or a lower face velocity, or both to reduce the exhaust quantity of air, measured in cubic feet per minute (CFM), necessary to contain fumes with a typical face velocity of 80-120 FPM. Traditionally, such fume hoods can reduce the exhaust CFM from 40% to 60% from open by-pass levels. Kewaunee's Dynamic Barrier fume hoods actually reduce exhaust requirements up to 73%.

Restricted by-pass fume hoods are designed for operation on variable air volume (VAV) exhaust systems when used with a fume hood face velocity controller (not provided with hood). On standard restricted by-pass hoods, the size of the air by-pass provides sufficient area that, with 100 feet per minute by-pass velocity with the sash closed, the exhaust volume will be 25 CFM per square foot of internal hood worksurface. This by-pass size is not appropriate for all VAV applications due to functional differences in face velocity controllers and variations in room exhaust requirements. If a different by-pass size is required, it should be specified at the time the hood is ordered. Hoods with horizontal and combination sashes are only cataloged as restricted by-pass hoods. In these hoods the size of the by-pass required for constant volume operation and for providing a minimum 25 CFM per squre foot of internal hood worksurface in VAV operation is the same.

Auxiliary air fume hoods are **Constant volume** hoods designed for use when it is not feasible to introduce the required make-up air through the room ventilation system. Up to 70% of the exhaust volume can be supplied through an auxiliary air chamber mounted above the hood. These hoods require a separate ducted fan system for the supply of the auxiliary air.

Open by-pass hoods are designated by the letter **"N"** in the eleventh space of the part number. **Restricted by-pass** hoods are designated by the letter "**B**" in the eleventh space of the part number. As an example H05G543672**N** is an open by-pass hood and H05G543672**B** is a restricted by-pass hood.

An **Auxiliary air** hood is designated by adding the appropriate auxiliary air chamber to the **Open by-pass** hood.

For answers to frequently asked questions about Kewaunee fume hoods visit the Kewaunee web site.

KEWAUNEE

Guide to Fume Hood Selection (continued)

Face Velocity

In a laboratory fume hood, the control of contaminants is achieved by drawing air through the face (sash) opening. The face velocity is defined as the average velocity of the air in this opening and is expressed in units of feet per minute (FPM). The Occupational Safety and Health Administration (OSHA) in its Laboratory Standard does not specify a required fume hood face velocity. As a result, hood users must look to published guidelines for recommendations on proper face velocities. The most authoritative of these published guidelines is the ANSI/AIHA Z9.5 American National Standard for Laboratory Ventilation. This publication recommends using an average face velocity of between 80 and 120 feet per minute.

Newer technologies have allowed face velocities as low as 55 FPM to show good containment. Part of the reasoning for these newer, lower face velocities is that the face velocity by itself does not define the protection level of a fume hood. There are other factors which are as important such as: the design of the hood, the location of the hood within the laboratory, the quality of the supply air distribution, and most importantly the work practices of the user. The ANSI/AIHA Z9.5 recommendation assumes that these factors have been optimized through proper design and work rules.

Where local and state codes require the use of a specific face velocity, these codes should be followed.

Sash Arrangements

Vertical sash hoods provide the best horizontal and vertical access to the hood interior but they also have the highest exhaust requirements. The exhaust requirements can be reduced by using gravity sash stops, although, this restricts the vertical access into the work area. Split sash hoods can be used where needed for two work areas.

Auto-Return Vertical Sash hoods use a vertical sash that will automatically return to a pre-set position if released from a higher position. A full-open lock-out is provided for set-ups.

Horizontal sash hoods provide good access into the hood vertically and allow for lower exhaust requirements. These sashes do restrict the access across the hood for loading of equipment and apparatus. This limitation becomes less significant in larger hoods.

Combination vertical rising/horizontal sash hoods, as the name implies, provide the benefits of both the vertical and horizontal sash hoods. For normal operation the sash can be partially raised vertically, or the horizontal panels can be used. The sash can be fully opened vertically for loading equipment into the hood.

Telescoping combination sash used on Kewaunee's Dynamic Barrier fume hood uses an interlocking twin sash mechanism that combines a restricted combination vertical rising/horizontal sash and small vertical rising sash to allow a very large 37" vertical opening. This sash facilitates set-ups while keeping the work opening small.

Configurations

Bench hoods are set on a worksurface approximately 36" above the floor and provide a convenient work area for the standing position. A minimum of 42" of interior working height is provided.

Walk-in hoods are used where taller apparatus is required or equipment is rolled into the hood. These hoods provide a minimum 78" of interior working height.

Distillation hoods are used where taller apparatus is required and convenient access to the floor of the hood is needed. These hoods provide a minimum 77" of interior working height.

ADA fume hoods are designed in accordance with the guidelines for the Americans with Disabilities Act. These hoods are also used when a sitting position is desired for work at the hood. They provide the same size work area as the corresponding bench hoods.

Special Purpose Fume Hoods

Isotope hoods are designed for use with radioactive materials. The Type 304 stainless steel cove corner seamless welded construction eases cleaning and decontamination.

Perchloric Acid hoods are required when this acid is heated above ambient temperature. The Type 316 stainless steel liner is fabricated to eliminate the possibility of formation of perchloric acid deposits. This hood includes a water wash down feature.

For answers to frequently asked questions about Kewaunee fume hoods visit the Kewaunee web site.

Guide to Fume Hood Selection (continued)

Baffle Design

Fixed baffles come with fixed slots in the rear baffle. The size of the slots are optimized to provide the best performance for general purpose use.

In some instances (e.g. use of large hot plates) it is advantageous to be able to change the air flow patterns within the hood by adjusting the slots in the rear baffle. This adjustment should only be done by someone familiar with hood air flows and performance.

Internally adjustable baffles come with movable baffle strips which can adjust the relative size of the top and bottom slots. The middle slot in the baffle is fixed.

Single point adjustable baffles are adjustable by moving a selector knob, near the front of the hood, which restricts the flow to the lower slot, thus increasing the flow at the upper baffle slot. This adjustment can be done without disturbing the apparatus within the hood.

The fixed baffle is the default option in the part number. Internally adjustable baffles are chosen by adding the suffix "**A**" to the part number (H05G543672N-**A**). Single point adjustable baffles are chosen by adding the suffix "**C**" to the part number (H05G543672N-**C**).

Liner Material

Kemglass, and **Phenolic Resin** are general purpose liners with very good to excellent chemical resistance. **Type 304 stainless steel** is usually used where cleanability and/or heat resistance are the prime requirements.

Phenolic Resin (T) liner is reinforced with cellulose fibers and is surfaced with white melamine material. The brown phenolic resin is visible at the edges of the sheet material.

Kemglass (G) is white fiberglass reinforced polyester sheet material.

Type 304 stainless steel (S) is 14 gauge stainless steel sheet with a No. 4 finish.

HOOD LINER CHARACTERISTICS

LINER MATERIAL	RESISTANCE TO HEAT	CHEMICAL RESISTANCE ACIDS	CHEMICAL RESISTANCE SOLVENTS	CLEANABILITY
Phenolic Resin	G	E	E	G
Kemglass	G	E	G	G
Stainless Steel	E	F	E	E

E = Excellent G = Good F = Fair P = Poor

Worktops

Epoxy Resin worktops are available in four colors, have excellent chemical resistance, and good heat resistance. They are the normal choice for general purpose hoods and highly corrosive applications.

Stainless Steel worktops are available in Types 304 and 316. They are used where cleanability and heat resistance are important. Type 316 is preferred where improved chemical resistance is desired.

The hood worktop is specified by a separate part number from the hood for all hoods except Isotope and Perchloric Acid hoods..

For answers to frequently asked questions about Kewaunee fume hoods visit the Kewaunee web site.

KEWAUNEE

Fume Hood Selection Chart

Hood Number	Purpose	Sash Type	By-pass			Page No.
Constant Volume						*Click Page Number*
	Bench	H05	General Purpose	Vertical	Open	10-11
		H08	ADA	Vertical	Open	16-17
		H20	Isotope	Vertical	Open	22-23
		H25	Perchloric Acid	Vertical	Open	24-25
	Walk-In	H30	General Purpose	Vertical	Open	30-31
	Distillation	H36	Distillation	Vertical	Open	38-39
Low Constant Volume						*Click Page Number*
	Bench	H50	General Purpose Ultra Low Volume	Telescoping Combination	Dynamic Barrier	12-13
		H07	General Purpose	Combination	Restricted	14-15
		H09	ADA	Combination	Restricted	18-19
		H10	General Purpose	Split Vertical	Open	20-21
		H05	General Purpose	Vertical w/Sash Stop	Open	10-11
		H70	General Purpose	Horizontal	Restricted	26-27
		HOP	General Purpose	Combination	Restricted	28-29
	Walk-In	H52	General Purpose	Low-flow Combination	Dynamic Barrier	32-33
		H32	General Purpose	Combination	Restricted	34-35
Variable Air Volume (VAV)						*Click Page Number*
	Bench	H05	General Purpose	Vertical	Restricted	10-11
		H07	General Purpose	Combination	Restricted	14-15
		H70	General Purpose	Horizontal	Restricted	26-27
		H20	Isotope	Vertical	Restricted	22-23
		HOP	General Purpose	Combination	Restricted	28-29
	Walk-In	H30	General Purpose	Vertical	Restricted	30-31
		H32	General Purpose	Combination	Restricted	34-35
		H34	General Purpose	Horizontal	Restricted	36-37
	Distillation	H36	Distillation	Vertical	Restricted	38-39
Auxiliary Air						*Click Page Number*
	Bench	H05 & H01	General Purpose	Vertical	Open	10-11
		H10 & H01	General Purpose	Split Vertical	Open	20-21
		H08 & H01	ADA	Vertical	Open	16-17
		H20 & H01	Isotope	Vertical	Open	22-23
		H25 & H01	Perchloric Acid	Vertical	Open	24-25
	Walk-In	H30 & H01	General Purpose	Vertical	Open	30-31
	Distillation	H36 & H01	General Purpose	Vertical	Open	38-39

Guide to Fume Hood Selection (continued)

Supreme Air Fume Hood Catalog Number Explanation

H05 G 54 36 72 N - A...9

Fume Hood Type

- **H01** = Auxiliary Air Chamber
- **H05** = Vertical Sash Bench Hood
- **H07** = Combination Sash Bench Hood
- **H08** = ADA Vertical Sash Bench Hood
- **H09** = ADA Combo Sash Bench Hood
- **H10** = Split Sash Bench Hood
- **H20** = Isotope Bench Hood
- **H25** = Perchloric Acid Bench Hood
- **H30** = Vertical Sash Walk-In Hood
- **H32** = Combination Sash Walk-In Hood
- **H34** = Horizontal Sash Walk-In Hood
- **H36** = Vertical Sash Distillation Hood
- **H50** = Dynamic Barrier Bench Hood
- **H52** = Dynamic Barrier Walk-In Hood
- **H70** = Horizontal Sash Bench Hood
- **HOP** = HOPEC Bench Hood

Interior Liner Material

- **G** = Kemglass (fiberglass reinforced polyester)
- **S** = Type 304 Stainless Steel
- **T** = Phenolic Resin

Add On Options

See list below

By-Pass Option

- **N** = Open By-Pass
- **B** = Restricted By-Pass

Hood Length

- **48** = 4'-0" / 48"
- **60** = 5'-0" / 60"
- **72** = 6'-0" / 72"
- **96** = 8'-0" / 96"
- **20** = 10'-0" / 120"
- **44** = 12'-0" / 144"

Hood Depth

- **36** = 3'-0" / 36"

Hood Height

- **13** = Air Chamber
- **54** = Bench Hood
- **90** = Walk-In Hoods & Distillation Hoods

Add On Options Lettering Code:

- **A** = Adjustable Baffles
- **C** = Single Point Adjustable Baffles
- **D** = Distillation Rack
- **E** = Fire Extinguisher
- **F** = Two Extra GFI Receptacles (120 VAC 20 amp – replaces bottom fixture holes on each side)
- **G** = Front Load Fittings
- **H** = Pre-wired/UL Listed
- **I** = Safety Shield
- **K** = Vapor Proof Light
- **L** = Explosion Proof Light
- **M** = Air Alert 600 Airflow Alarm
- **O** = Stainless Steel Deflector Vane
- **Q** = Stainless Steel Sash Handle
- **R** = Extra GFI Receptacle on right side (replaces bottom fixture hole)
- **S** = Extra GFI Receptacle on left side (replaces bottom fixture hole)
- **T** = Sight-Tight Chevron Grille
- **V** = Vision Panel
- **W** = Air Alert 300 Alarm (location 1)
- **Z** = Air Alert 300 Alarm (location 2)
- **1** = Frameless Tempered Glass Sash
- **2** = Framed Safety Glass Sash
- **3** = Framed Tempered Glass Sash
- **4** = St. Steel Safety Glass Sash
- **5** = St. Steel Tempered Glass Sash
- **6** = Tissue Screen
- **7** = Type 316 Stainless Steel Duct Collar
- **8** = Gravity Sash Stop
- **9** = Work Shelf Supports

KEWAUNEE

General Purpose Bench Fume Hood

with Vertical Rising Sash

Available Models:
Open By-Pass
Restricted By-Pass
Auxiliary Air

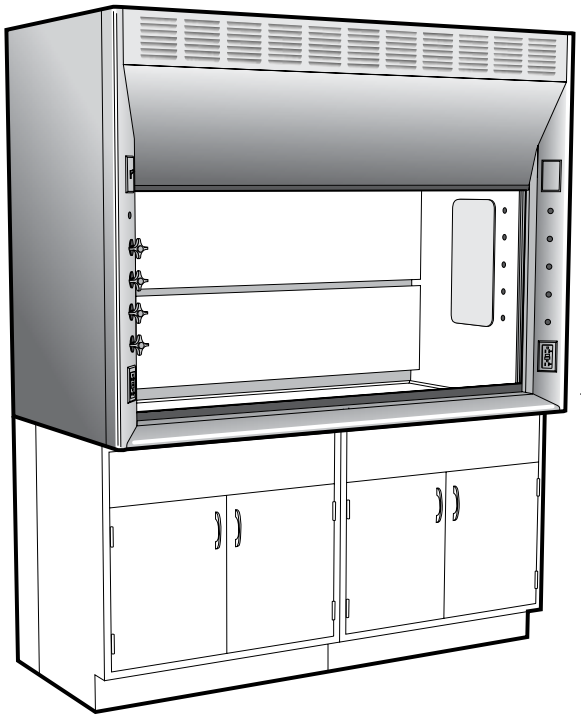

Features:

- Radiused corner posts and airfoils for smooth air movement assures high level of comfort, safety and efficiency.
- 4" thick endwalls provide more interior work space and clean-lined uncluttered design.
- Interior baffles designed to minimize turbulence and optimize containment.
- Frameless sash with full-length formed steel handle for neat, clean appearance and streamline air features.
- Low profile PVC sash tracks and exclusive sash leveling and alignment features assure easy-smooth sash operation
- Large friction-fit interior access panels provide easy access to piping and service fittings.
- Heavy gauge cold rolled steel exterior panels with independent rigid structural frame.
- Designed and tested using ASHRAE 110-1995, BS 7258, and DIN 12 924 standards.

Available Options:

Adjustable Baffles
Air Flow and Static Pressure Alarms
Service Fittings and Piping
Electrical Fixtures and Wiring
UL listed when pre-wired per UL 61010A-1
1805 UL classified with Kemglass or Stainless Steel liner
Vapor Proof and Explosion Proof Lighting
Stainless Steel Deflector Vane
Alternate Sash Handles
Sash Frames
Tempered Sash Glass
Tissue Screen
Fire Extinguisher
Distillation Rack
Sash Stop
Stainless Steel Duct Collar

KEWAUNEE

Supreme Air Fume Hood H05

Specifications:

Supreme Air General Purpose Bench Fume Hoods are furnished with a choice of liner and baffles with upper, center, and lower exhaust slots. Each fume hood is complete with a lower deflector vane, counterbalanced, frameless sash of ¼" combination safety glass and interior plumbing access panels. Hood exteriors are fabricated of cold rolled steel, phosphate coated with a baked chemical resistant, synthetic resin finish. The exhaust duct collar is polyethylene, 11 15/16" O.D. (8 foot hoods are furnished with two duct collars.) Supreme Air Bench Hoods are available with either an Open By-Pass or a Restricted By-Pass for VAV use. An auxiliary air chamber is available for use on the Open By-Pass hood.

Additional Parts Required to Make Up a Complete Fume Hood Assembly

Worktop	Jump to Section
Base Cabinets	casework catalogs
Service Fittings	Jump to Section
Cupsink	Jump to Section
Fan/Blower	Jump to Section

DIMENSIONS	HEIGHT	LENGTH				DEPTH
Overall Dimension	89¾" **	48"	60"	72"	96"	36"
Sash Opening	28" *	40"	52"	64"	88"	...
Worktop	37" **	40"	52"	64"	88"	25½"
Clearance (sash up)	97" **	...	...	...	...	...

* Sash opening height above airfoil. Add 1" in height to calculate sash opening area.
** Subtract 1" in height if wood base cabinets are used.

Overall Hood Length	Sash Opening Sq. Ft.	Total CFM and Static Pressure					
		80 FPM	S.P.	100 FPM	S.P.	120 FPM	S.P.
4'-0" / 48"	8.1	650	0.15"	810	0.25"	980	0.35"
5'-0" / 60"	10.5	840	0.20"	1050	0.30"	1260	0.45"
6'-0" / 72"	12.9	1040	0.25"	1290	0.40"	1550	0.60"
8'-0" / 96"	17.7	1420	0.15"	1770	0.25"	2130	0.35"

Static pressures shown are for the pressure drop through the hoods only. The total pressure drop through the hood and the duct system must be calculated to select the proper exhaust fan.

Note: CFM requirements shown above are for **Open By-Pass** hoods. The CFM requirements for a **Restricted By-Pass** hood with the sash fully open is the same as above. The by-pass opening with the sash closed is 20% of that with the sash fully open.

Liner Options:

T = Phenolic Resin

G = Kemglass
Fiberglass reinforced polyester

S = Type 304 Stainless Steel

The blank left in the fume hood catalog numbers is for designating the desired lining.

Example: H05**T**543648N would designate a 4' hood with a Phenolic Resin lining.

Accessories Include: Two 120 volt AC 20 amp GFI receptacles, dual-lamp T8 LED light fixture, and 20 amp light switch. **No wiring for the electrical fixtures is included unless H-Option is selected.**

Optional Accessories: Each front post and interior end liner is punched for up to five (5) remote control service fittings. The right hand post is punched for a second electrical fixture at the top which may be used for a fan switch or other electrical device. **Service fittings, fan, fan switch, worktop, cupsink, and base units must be ordered separately.**

General Purpose Bench Fume Hoods — Vertical Rising Sash

4'-0"

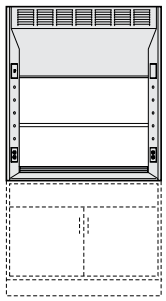

H05__543648N
Open By-Pass
H05__543648B
Restricted By-Pass

5'-0"

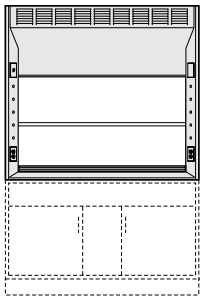

H05__543660N
Open By-Pass
H05__543660B
Restricted By-Pass

6'-0"

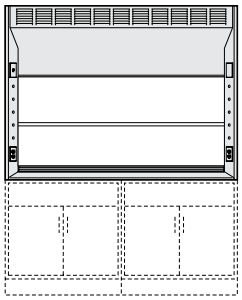

H05__543672N
Open By-Pass
H05__543672B
Restricted By-Pass

8'-0"

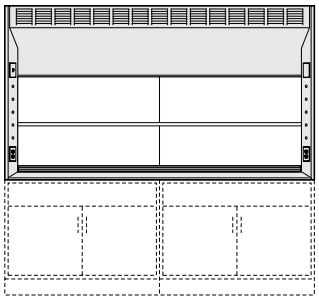

H05__543696N
Open By-Pass
H05__543696B
Restricted By-Pass

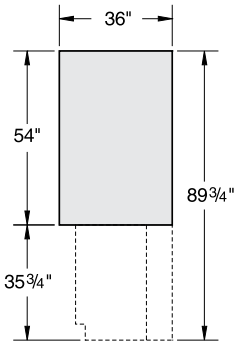

End View

Auxiliary Air

All Open By-Pass hoods can be Auxiliary Air hoods by adding an Auxiliary Air Chamber.

Notes: Open By-Pass Fume Hood shown. Restricted By-Pass Fume Hoods do not have louvered top front panel.

KEWAUNEE

Ultra Low Constant Volume Fume Hood

with Telescoping Combination Vertical Rising/Horizontal Sash

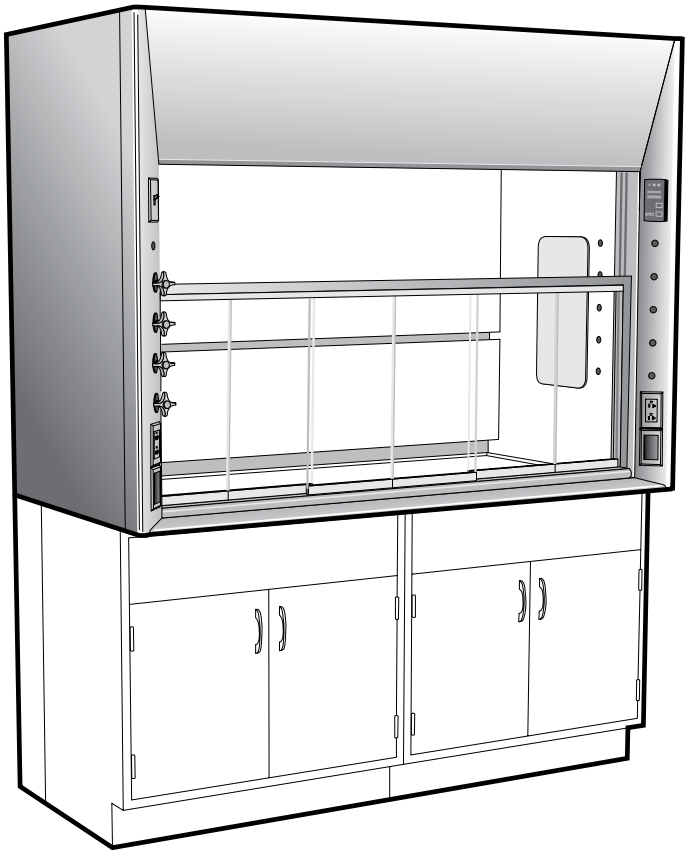

Available Models:
Dynamic Barrier By-Pass

Features:

- Requires over 70 percent less exhaust air volume than a traditional by-pass fume hood.
- Double telescoping vertical sash design allows full view into hood interior and 37" opening height for apparatus setup.
- Radiused corner posts and airfoils for smooth air movement assures high level of comfort, safety and efficiency.
- 4" thick endwalls provide more interior work space and clean-lined uncluttered design.
- Low profile sash frame for easy access through horizontal panels.
- Service ports provide convenient, safe passage for equipment connections.
- Exclusive Air Alert 600 Monitor provides a visual one-hour timeline of fume hood performance.
- Exclusive static pressure averaging mechanism provides accurate face velocity readings regardless of sash opening.
- Quiet fume hood operation, under 40 dBA with properly sized fans and ductwork.
- Designed and tested using ASHRAE 110-1995, BS 7258, and DIN 12 924 standards.

Available Option:

Service Fittings and Piping
Electrical Fixtures and Wiring
UL listed when pre-wired per UL 61010A-1
1805 UL classified with Kemglass or Stainless Steel liner
Lighting
Stainless Steel Deflector Vane
Tempered Sash Glass
Tissue Screen
Fire Extinguisher
Distillation Rack
Stainless Steel Duct Collar

Dynamic Barrier Fume Hood H50

Specifications:

Dynamic Barrier Supreme Air Bench Fume Hoods are furnished with a choice of liner and baffles with center and lower exhaust slots. Each fume hood is complete with a lower deflector vane, lower sash frame fitted with six ¼" combination safety glass panels, interlocking upper frameless ¼" combination safety glass sash, and an Air Alert 600 Monitor with static pressure averaging. Hood exteriors are fabricated of cold rolled steel, phosphate coated with a baked chemical resistant, synthetic resin finish.

The exhaust duct collar is polyethylene, 7 15/16" O.D. (8 foot hoods are furnished with two duct collars.)

Dynamic Barrier Supreme Air Bench Hoods are not designed for use with auxiliary air chambers.

Additional Parts Required to Make Up a Complete Fume Hood Assembly

Worktop	Jump to Section
Base Cabinets	casework catalogs
Service Fittings	Jump to Section
Cupsink	Jump to Section
Fan/Blower	Jump to Section

DIMENSIONS	HEIGHT	LENGTH				DEPTH
Overall Dimension	89¾" *	48"	60"	72"	96"	36"
Sash Opening	37"	40"	52"	64"	88"	...
Worktop	37" *	40"	52"	64"	88"	25½"
Clearance (sash up)	98¾" *	...	...	...	...	...

* Subtract 1" in height if wood base cabinets are used.

Overall Hood Length	Maximum Face Opening of Horizontal Sashes				Face Opening with Vertical Sash at 10" Sash Stop				Total CFM and Static Pressure	
	W	H	Ft^2*	Velocity	W	H	Ft^2*	Velocity	CFM	S.P.
4'-0" / 48"	14½"	22"	2.25	100 fpm	40"	10"	2.78	81fpm	225	0.11"
5'-0" / 60"	18"	22"	2.80	100 fpm	52"	10"	3.61	80fpm	280	0.15"
6'-0" / 72"	22"	22"	3.50	100 fpm	64"	10"	4.44	80fpm	350	0.21"
8'-0" / 96"	30"	22"	4.85	100 fpm	88"	10"	6.11	80fpm	485	0.11"

* Includes free area contributions from sash clearance spaces and by-pass opening.

Static pressures shown are for the pressure drop through the hoods only. The total pressure drop through the hood and the duct system must be calculated to select the proper exhaust fan.

Liner Options:

T = Phenolic Resin

G = Kemglass
Fiberglass reinforced polyester

S = Type 304 Stainless Steel

The blank left in the fume hood catalog numbers is for designating the desired lining.

Example: H50**T**543648N would designate a 4' hood with a Phenolic Resin lining.

Accessories Include: Two 120 volt AC 20 amp GFI receptacles, dual-lamp T8 LED light fixture, and 20 amp light switch, Air Alert 600 Air Flow Monitor and two cord ports. **No wiring for the electrical fixtures is included unless H-Option is added to part number.**

Optional Accessories: Each front post and interior end liner is punched for up to five (5) remote control service fittings. **Service fittings, fan, fan switch, worktop, cupsink, and base units must be ordered separately.**

Dynamic Barrier Bench Fume Hoods — Telescoping Combination Vertical Rising/Horizontal Sash

4'-0"

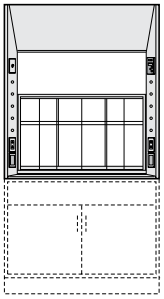

H50__543648N

5'-0"

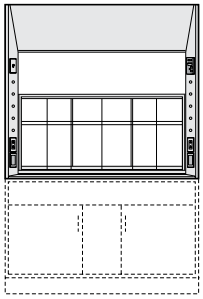

H50__543660N

6'-0"

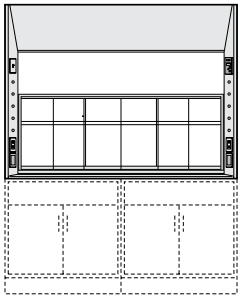

H50__543672N

8'-0"

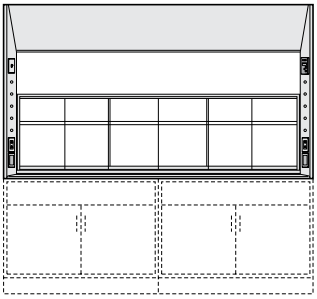

H50__543696N

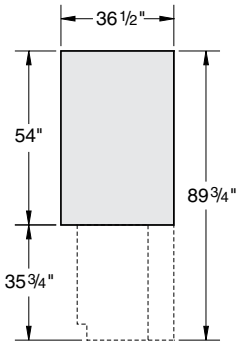

End View

Note:

KEWAUNEE

Combination Sash Bench Fume Hood

with Combination Vertical Rising/Horizontal Sash

Available Models:
Restricted By-Pass
Open By-Pass
(by special request only)

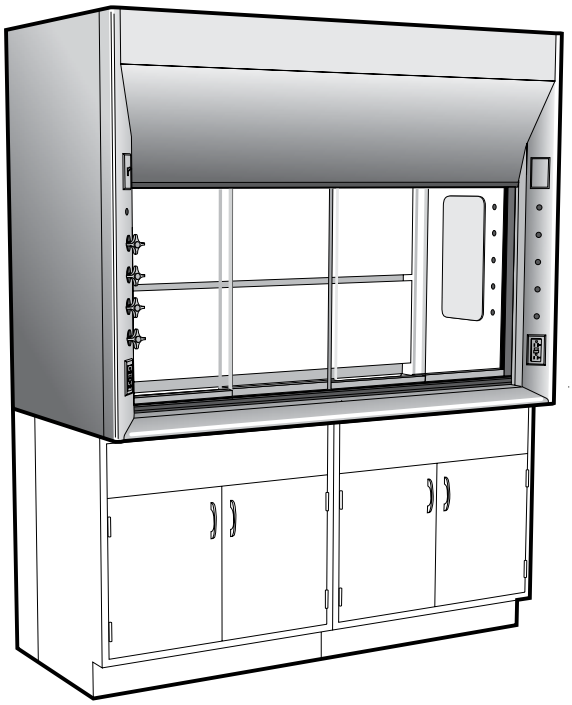

Available Options:

- Adjustable Baffles
- Air Flow and Static Pressure Alarms
- Service Fittings and Piping
- Electrical Fixtures and Wiring
- UL listed when pre-wired per UL 61010A-1
- 1805 UL classified with Kemglass or Stainless Steel liner
- Vapor Proof and Explosion Proof Lighting
- Stainless Steel Deflector Vane
- Stainless Steel Sash Frame
- Tempered Sash Glass
- Tissue Screen
- Fire Extinguisher
- Distillation Rack
- Sash Stop
- Stainless Steel Duct Collar

Features:

- Radiused corner posts and airfoils for smooth air movement assures high level of comfort, safety and efficiency.
- 4" thick endwalls provide more interior work space and clean-lined uncluttered design.
- Interior baffles designed to minimize turbulence and optimize containment.
- Narrow framed sash with four horizontal glass panels on two tracks for neat clean appearance and improved exhaust efficiency.
- Low profile PVC sash tracks and exclusive sash leveling and alignment features assure easy-smooth sash operation
- Large friction-fit interior access panels provide easy access to piping and service fittings.
- Heavy gauge cold rolled steel exterior panels with independent rigid structural frame.
- Designed and tested using ASHRAE 110-1995, BS 7258, and DIN 12 924 standards.

Supreme Air Fume Hood H07

Specifications:

Supreme Air Combination Sash Bench Fume Hoods are furnished with a choice of liner and baffles with upper, center, and lower exhaust slots. Each fume hood is complete with a lower deflector vane, counterbalanced, narrow framed sash with ¼" combination safety glass horizontal panels and interior plumbing access panels. Hood exteriors are fabricated of cold rolled steel, phosphate coated with a baked chemical resistant, synthetic resin finish. The exhaust duct collar is polyethylene, 11 15/16" O.D. (8 foot hoods are furnished with two duct collars.)

Combination Sash Bench Hoods are furnished with a Restricted By-Pass to match the restricted sash opening. They are designed for use with both constant volume and VAV applications. An Open By-Pass is available on request for applications where the hood is operated with the sash fully open. Combination Sash Bench Hoods are not designed for use with Auxiliary Air Chambers.

Additional Parts Required to Make Up a Complete Fume Hood Assembly

Worktop	Jump to Section
Base Cabinets	casework catalogs
Service Fittings	Jump to Section
Cupsink	Jump to Section
Fan/Blower	Jump to Section

Liner Options:

T = Phenolic Resin

G = Kemglass
Fiberglass reinforced polyester

S = Type 304 Stainless Steel

The blank left in the fume hood catalog numbers is for designating the desired lining.

Example: H07**T**543648N would designate a 4' hood with a Phenolic Resin lining.

DIMENSIONS	HEIGHT	LENGTH				DEPTH
Overall Dimension	89¾" **	48"	60"	72"	96"	36"
Sash Opening	28" *	40"	52"	64"	88"	...
Worktop	37" **	40"	52"	64"	88"	25½"
Clearance (sash up)	97" **	...	...	...	...	...

* Sash opening height above airfoil. Add 1" in height to calculate sash opening area.
** Subtract 1" in height if wood base cabinets are used.

Overall Hood Length	Sash Opening Sq. Ft. *	Total CFM and Static Pressure					
		80 FPM	S.P.	100 FPM	S.P.	120 FPM	S.P.
4'-0" / 48"	4.8	380	0.05"	480	0.10"	580	0.15"
5'-0" / 60"	6.3	500	0.10"	630	0.15"	760	0.20"
6'-0" / 72"	7.8	620	0.10"	780	0.15"	940	0.25"
8'-0" / 96"	10.9	870	0.10"	1090	0.10"	1310	0.15"

* Maximum sash opening with vertical sash down and horizontal panels fully open. Includes By-Pass opening and 1" below deflector vane.

Static pressures shown are for the pressure drop through the hoods only. The total pressure drop through the hood and the duct system must be calculated to select the proper exhaust fan.

Accessories Include: Two 120 volt AC 20 amp GFI receptacles, dual-lamp T8 LED light fixture, and 20 amp light switch. **No wiring for the electrical fixtures is included unless H-Option is selected.**

Optional Accessories: Each front post and interior end liner is punched for up to five (5) remote control service fittings. The right hand post is punched for a second electrical fixture at the top which may be used for a fan switch or other electrical device. **Service fittings, fan, fan switch, worktop, cupsink, and base units must be ordered separately.**

Combination Sash Bench Fume Hoods — Combination Vertical Rising/Horizontal Sash

4'-0"

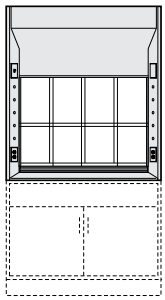

H07__543648B
Restricted By-Pass

5'-0"

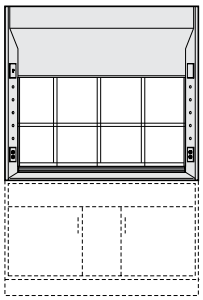

H07__543660B
Restricted By-Pass

6'-0"

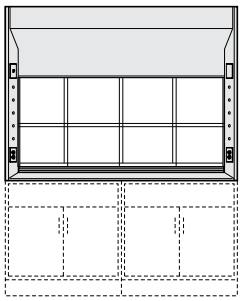

H07__543672B
Restricted By-Pass

8'-0"

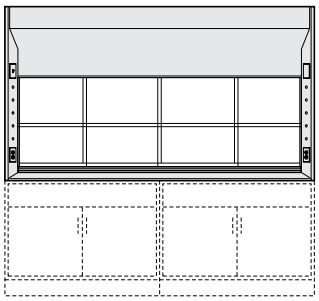

H07__543696B
Restricted By-Pass

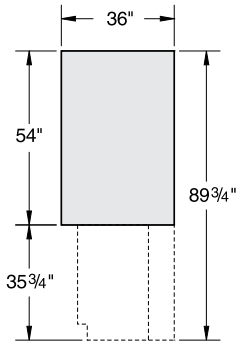

End View

Open By-Pass by special request

Notes: Restricted By-Pass Fume Hood shown. Open By-Pass Fume Hoods do not have louvered top front panel.

KEWAUNEE

ADA Bench Fume Hood

with Vertical Rising Sash

Available Models:
Open By-Pass
Restricted By-Pass
Auxiliary Air

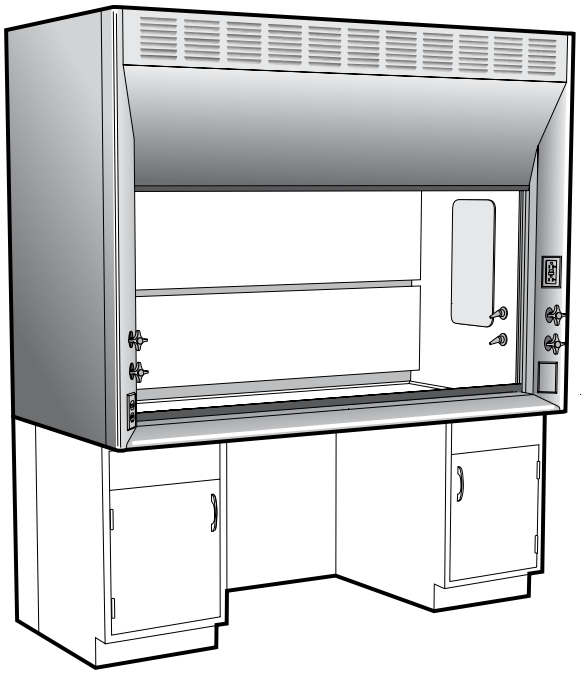

Features:

- Designed to meet guidelines of the Americans with Disabilities Act (ADA)
- Complete with Gravity Sash Stop.
- Fixtures and service fittings moved down to within reach of wheelchair bound operator.
- Radiused corner posts and airfoils for smooth air movement assures high level of comfort, safety and efficiency.
- 4" thick endwalls provide more interior work space and clean-lined uncluttered design.
- Interior baffles designed to minimize turbulence and optimize containment.
- Frameless sash with full-length formed steel handle for neat, clean appearance and streamline air features.
- Low profile PVC sash tracks and exclusive sash leveling and alignment features assure easy-smooth sash operation
- Large friction-fit interior access panels provide easy access to piping and service fittings.
- Heavy gauge cold rolled steel exterior panels with independent rigid structural frame.
- Designed and tested using ASHRAE 110-1995, BS 7258, and DIN 12 924 standards.

Available Options:

Adjustable Baffles
Air Flow and Static Pressure Alarms
Service Fittings and Piping
Electrical Fixtures and Wiring
UL listed when pre-wired per UL 61010A-1
1805 UL classified with Kemglass or Stainless Steel liner
Vapor Proof and Explosion Proof Lighting
Stainless Steel Deflector Vane
Alternate Sash Handles
Sash Frames
Tempered Sash Glass
Tissue Screen
Fire Extinguisher
Distillation Rack
Stainless Steel Duct Collar

Supreme Air Fume Hood H08

Specifications:

Supreme Air Vertical Rising Sash ADA Bench Fume Hoods are furnished with a choice of liner and baffles with upper, center, and lower exhaust slots. Each fume hood is complete with a lower deflector vane, counterbalanced, framless sash with ¼" combination safety glass, and interior plumbing access panels. Hood exteriors are fabricated of cold rolled steel, phosphate coated with a baked chemical resistant, synthetic resin finish. The exhaust duct collar is polyethylene, 11 15/16" O.D. Each hood is furnished with a sash stop mounted at 14" above the lower deflector to keep the sash from rising above the operators reach.

Supreme Air ADA Bench Hoods with Vertical Rising Sash are available with either an Open By-Pass or a Restricted By-Pass for VAV use. An auxiliary air chamber is available for use on the Open By-Pass hood.

Additional Parts Required to Make Up a Complete Fume Hood Assembly

Worktop	Jump to Section
Base Cabinets	casework catalogs
Service Fittings	Jump to Section
Cupsink	Jump to Section
Fan/Blower	Jump to Section

*ADA guidelines require a space 30" wide by 30" high by 25" deep for a wheelchair to roll beneath a fume hood.

Liner Options:

T = Phenolic Resin

G = Kemglass
Fiberglass reinforced polyester

S = Type 304 Stainless Steel

The blank left in the fume hood catalog numbers is for designating the desired lining.

Example: H08**T**543648N would designate a 4' hood with a Phenolic Resin lining.

DIMENSIONS	HEIGHT	LENGTH				DEPTH
Overall Dimension	84"	48"	60"	72"		36"
Sash Opening	14"	40"	52"	64"		...
Worktop	31¼"	40"	52"	64"		25½"
Clearance (sash up)	91"	...	...	...	...	...

Overall Hood Length	Sash Opening Sq. Ft.	Total CFM and Static Pressure					
		80 FPM	S.P.	100 FPM	S.P.	120 FPM	S.P.
4'-0" / 48"	4.7	380	0.05"	470	0.10"	570	0.15"
5'-0" / 60"	6.1	490	0.10"	610	0.10"	740	0.15"
6'-0" / 72"	7.6	600	0.10"	760	0.15"	910	0.20"

Static pressures shown are for the pressure drop through the hoods only. The total pressure drop through the hood and the duct system must be calculated to select the proper exhaust fan.

Note: CFM requirements shown above are for **Open By-Pass** hoods with sash stop at 14". CFM requirements for sash fully open is same as H05. The CFM requirements for a **Restricted By-Pass** hood with the sash fully open is the same as above.

Accessories Include: 120 volt AC 20 amp GFI duplex receptacle, combination 20 amp light switch—120 volt receptacle, and dual-lamp T8 LED light fixture,. **No wiring for the electrical fixtures is included unless H-Option is selected.**

Optional Accessories: Each front post and interior end liner is punched for up to two (2) remote control service fittings. The right hand post is punched for a second electrical fixture at the bottom which may be used for a fan switch or other electrical device. **Service fittings, fan, fan switch, worktop, cupsink, and base units must be ordered separately.**

ADA Bench Fume Hoods — Vertical Rising Sash

4'-0"

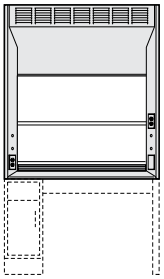

H08__543648N
Open By-Pass
H08__543648B
Restricted By-Pass

5'-0"

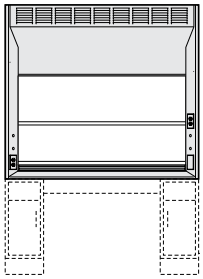

H08__543660N
Open By-Pass
H08__543660B
Restricted By-Pass

6'-0"

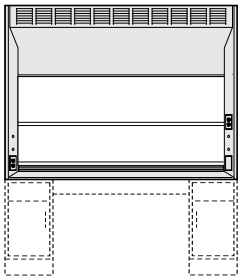

H08__543672N
Open By-Pass
H08__543672B
Restricted By-Pass

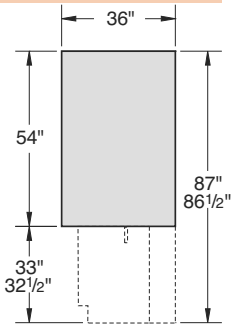

End View

Auxiliary Air

All Open By-Pass hoods can be Auxiliary Air hoods by adding an Auxiliary Air Chamber.

Notes: Open By-Pass Fume Hood shown. Restricted By-Pass Fume Hoods do not have louvered top front panel.

KEWAUNEE

ADA Bench Fume Hood

with Combination Vertical Rising/Horizontal Sash

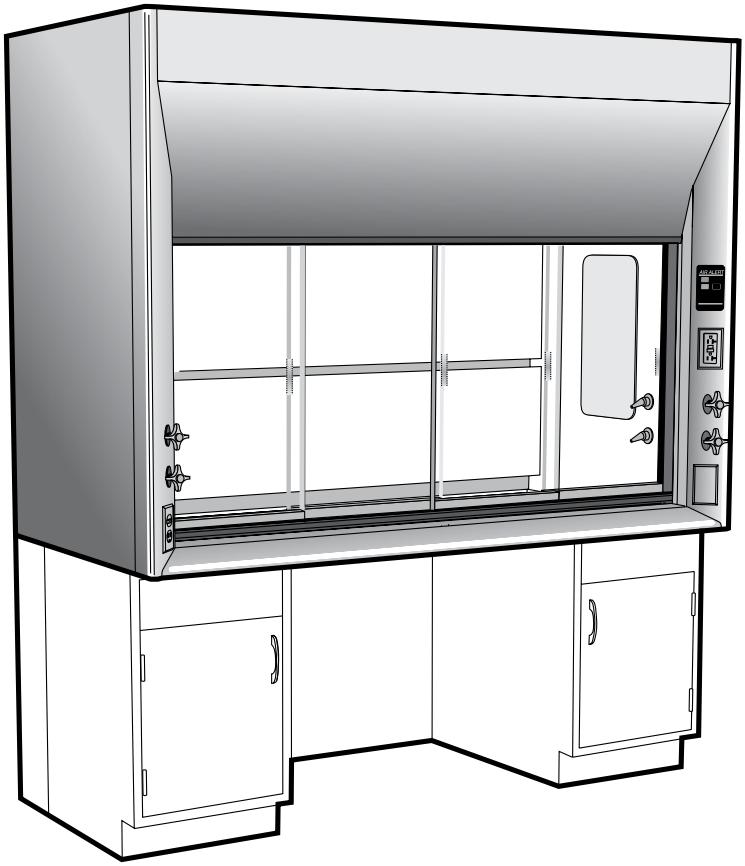

Available Models:
Restricted By-Pass
Open By-Pass
(by special request only)

Features:

- Designed to meet guidelines of the Americans with Disabilities Act (ADA)
- Complete with Air Alert 300 Alarm and Gravity Sash Stop.
- Fixtures and service fittings moved down to within reach of wheelchair bound operator.
- Radiused corner posts and airfoils for smooth air movement assures high level of comfort, safety and efficiency.
- 4" thick endwalls provide more interior work space and clean-lined uncluttered design.
- Interior baffles designed to minimize turbulence and optimize containment.
- Narrow framed sash with four horizontal glass panels on two tracks for neat clean appearance and improved exhaust efficiency.
- Low profile PVC sash tracks and exclusive sash leveling and alignment features assure easy-smooth sash operation
- Large friction-fit interior access panels provide easy access to piping and service fittings.
- Heavy gauge cold rolled steel exterior panels with independent rigid structural frame.
- Designed and tested using ASHRAE 110-1995, BS 7258, and DIN 12 924 standards.

Available Option:

Adjustable Baffles
Service Fittings and Piping
Electrical Fixtures and Wiring
UL listed when pre-wired per UL 61010A-1
1805 UL classified with Kemglass or Stainless Steel liner
Vapor Proof and Explosion Proof Lighting
Stainless Steel Deflector Vane
Stainless Steel Sash Frame
Tempered Sash Glass
Tissue Screen
Fire Extinguisher
Stainless Steel Duct Collar

Supreme Air Fume Hood H09

Specifications:

Supreme Air Combination Sash ADA Bench Fume Hoods are furnished with a choice of liner and baffles with upper, center, and lower exhaust slots. Each fume hood is complete with a lower deflector vane, counterbalanced, narrow framed sash with ¼" combination safety glass horizontal panels and interior plumbing access panels. Hood exteriors are fabricated of cold rolled steel, phosphate coated with a baked chemical resistant, synthetic resin finish. The exhaust duct collar is polyethylene, 11 15/16" O.D. Each hood is furnished with an Air Alert 300 Alarm and a sash stop mounted at 14" above the lower deflector.

ADA Combination Sash Hoods are furnished with a Restricted By-Pass to match the restricted sash opening. They are designed for use with both constant volume and VAV applications. An Open By-Pass is available on request for applications where the hood is operated with the sash fully open. Combination Sash Bench Hoods are not designed for use with Auxiliary Air Chambers.

Additional Parts Required to Make Up a Complete Fume Hood Assembly

Worktop	Jump to Section
Base Cabinets	casework catalogs
Service Fittings	Jump to Section
Cupsink	Jump to Section
Fan/Blower	Jump to Section

***** ADA guidelines require a space 30" wide by 30" high by 25" deep for a wheelchair to roll beneath a fume hood.

Liner Options:

T = Phenolic Resin

G = Kemglass
Fiberglass reinforced polyester

S = Type 304 Stainless Steel

The blank left in the fume hood catalog numbers is for designating the desired lining.

Example: H09**T**543648N would designate a 4' hood with a Phenolic Resin lining.

DIMENSIONS	HEIGHT	LENGTH				DEPTH
Overall Dimension	84"	48"	60"	72"		36"
Sash Opening	29"	40"	52"	64"		...
Worktop	31¼"	40"	52"	64"		25½"
Clearance (sash up)	91"	...	...	...	...	...

Overall Hood Length	Sash Opening Sq. Ft. *	Total CFM and Static Pressure					
		80 FPM	S.P.	100 FPM	S.P.	120 FPM	S.P.
4'-0" / 48"	4.8	380	0.05"	480	0.10"	580	0.15"
5'-0" / 60"	6.3	500	0.10"	630	0.15"	760	0.20"
6'-0" / 72"	7.8	620	0.10"	780	0.15"	940	0.25"

* Maximum sash opening with vertical sash down and horizontal panels fully open. Includes By-Pass opening and 1" below deflector vane.
Static pressures shown are for the pressure drop through the hoods only. The total pressure drop through the hood and the duct system must be calculated to select the proper exhaust fan.

Accessories Include: 120 volt AC 20 amp GFI duplex receptacle, combination 20 amp light switch—120 volt receptacle, dual-lamp T8 LED light fixture,, and an Air Alert 300 Airflow Alarm. **No wiring for the electrical fixtures is included unless H-Option is selected.**

Optional Accessories: Each front post and interior end liner is punched for up to two (2) remote control service fittings. The right hand post is punched for a second electrical fixture at the bottom which may be used for a fan switch or other electrical device. **Service fittings, fan, fan switch, worktop, cupsink, and base units must be ordered separately.**

ADA Bench Fume Hoods — Combination Vertical Rising/Horizontal Sash

4'-0"

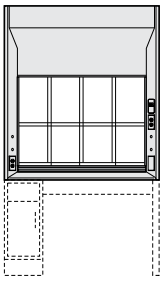

H09__543648B
Restricted By-Pass

5'-0"

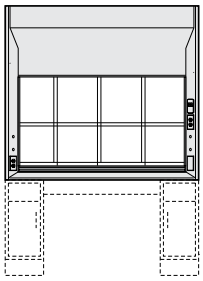

H09__543660B
Restricted By-Pass

6'-0"

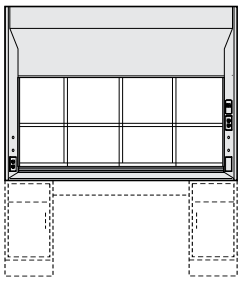

H09__543672B
Restricted By-Pass

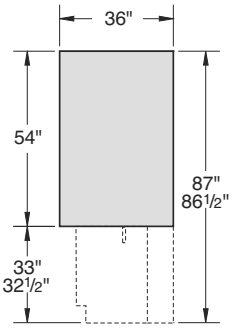

End View

Open By-Pass available by special request.

Note:

Note: Restricted By-Pass Fume Hood shown. Open By-Pass Fume Hoods have louvered top front panel.

KEWAUNEE

Split Sash Bench Fume Hood

Split Vertical Rising Sash with Disappearing Center Post

Available Models:
Open By-Pass
Restricted By-Pass
Auxiliary Air

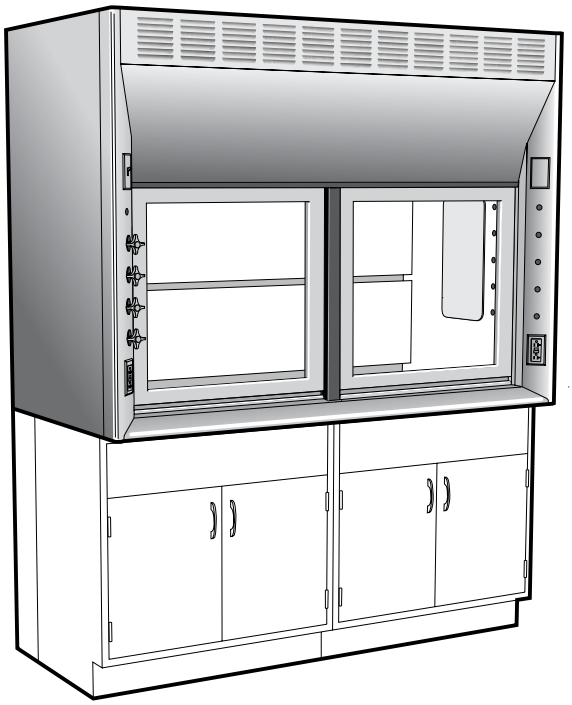

Features:

- Two piece vertical rising sash with a disappearing center post allows safer operating conditions.
- Radiused corner posts and airfoils for smooth air movement assures high level of comfort, safety and efficiency.
- 4" thick endwalls provide more interior work space and clean-lined uncluttered design.
- Interior baffles designed to minimize turbulence and optimize containment.
- Narrow framed sash with full-length formed steel handles for neat, clean appearance and streamline air features.
- Low profile PVC sash tracks and exclusive sash leveling and alignment features assure easy-smooth sash operation
- Large friction-fit interior access panels provide easy access to piping and service fittings.
- Heavy gauge cold rolled steel exterior panels with independent rigid structural frame.
- Designed and tested using ASHRAE 110-1995, BS 7258, and DIN 12 924 standards.

Available Option:

Adjustable Baffles
Air Flow and Static Pressure Alarms
Service Fittings and Piping
Electrical Fixtures and Wiring
UL listed when pre-wired per UL 61010A-1
1805 UL classified with Kemglass or Stainless Steel liner
Vapor Proof and Explosion Proof Lighting
Stainless Steel Deflector Vane
Stainless Steel Sash Frame
Tempered Sash Glass
Tissue Screen
Fire Extinguisher
Distillation Rack
Sash Stop
Stainless Steel Duct Collar

Supreme Air Fume Hood H10

Specifications:

Supreme Air Split Sash Bench Fume Hoods are furnished with a choice of liner and baffles with upper, center, and lower exhaust slots. Each fume hood is complete with a lower deflector vane, counterbalanced, two-piece, steel framed sash with¼" combination safety glass and interior plumbing access panels. Hood exteriors are fabricated of cold rolled steel, phosphate coated with a baked chemical resistant, synthetic resin finish. All are furnished with two polyethylene, 11 15/16" O.D. exhaust duct collars. Supreme Air Bench Hoods are available with either an Open By-Pass or a Restricted By-Pass for VAV use. An auxiliary air chamber is available for use on the Open By-Pass hood.

Additional Parts Required to Make Up a Complete Fume Hood Assembly

Worktop	Jump to Section
Base Cabinets	casework catalogs
Service Fittings	Jump to Section
Cupsink	Jump to Section
Fan/Blower	Jump to Section

DIMENSIONS	HEIGHT	LENGTH			DEPTH
Overall Dimension	89¾" **	96"	120"	144"	36"
Sash Opening	28" *	88"	112"	136"	...
Worktop	37" **	88"	112"	136"	25½"
Clearance (sash up)	107" **	...	...	...	...

* Sash opening height above airfoil. Add 1" in height to calculate sash opening area.
** Subtract 1" in height if wood base cabinets are used.

Overall Hood Length	Sash Opening Sq. Ft.	Total CFM and Static Pressure					
		80 FPM	S.P.	100 FPM	S.P.	120 FPM	S.P.
8'-0" / 96"	17.7	1420	0.15"	1770	0.25"	2130	0.35"
10'-0" / 120"	22.6	1810	0.25"	2260	0.35"	2720	0.50"
12'-0" / 144"	27.4	2200	0.30"	2740	0.45"	3290	0.65"

Static pressures shown are for the pressure drop through the hoods only. The total pressure drop through the hood and the duct system must be calculated to select the proper exhaust fan.

Note: CFM requirements shown above are for **Open By-Pass** hoods. The CFM requirements for a **Restricted By-Pass** hood with the sash fully open is the same as above. The by-pass opening with the sash closed is 20% of that with the sash fully open.

Liner Options:

T = Phenolic Resin

G = Kemglass
Fiberglass reinforced polyester

S = Type 304 Stainless Steel

The blank left in the fume hood catalog numbers is for designating the desired lining.

Example: H10**T**543672N would designate a 6' hood with a Phenolic Resin lining.

Accessories Include: Two 120 volt AC 20 amp GFI receptacles, dual-lamp T8 LED light fixture, and 20 amp light switch. **No wiring for the electrical fixtures is included unless H-Option is selected.**

Optional Accessories: Each front post and interior end liner is punched for up to five (5) remote control service fittings. The right hand post is punched for a second electrical fixture at the top which may be used for a fan switch or other electrical device. **Service fittings, fan, fan switch, worktop, cupsink, and base units must be ordered separately.**

Split Sash Bench Fume Hoods — Vertical Rising Sash with Disappearing Center Post

8'-0"

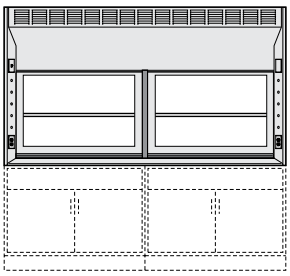

H10__543696N
Open By-Pass
H10__543696B
Restricted By-Pass

10'-0"

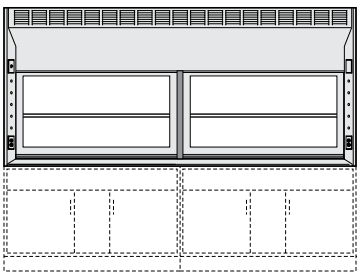

H10__543620N
Open By-Pass
H10__543620B
Restricted By-Pass

12'-0"

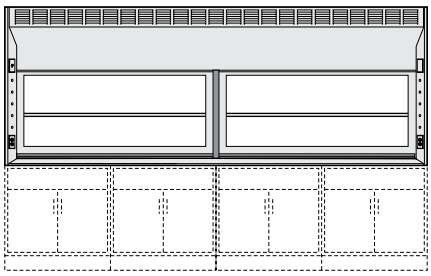

H10__543644N
Open By-Pass
H10__543644B
Restricted By-Pass

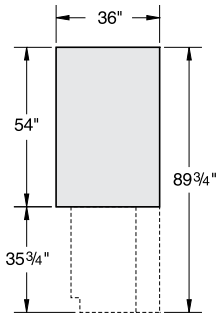

End View

Auxiliary Air

All Open By-Pass hoods can be Auxiliary Air hoods by adding an Auxiliary Air Chamber.

Notes: Open By-Pass Fume Hood shown. Restricted By-Pass Fume Hoods do not have louvered top front panel.

KEWAUNEE

Isotope Bench Fume Hood

with Vertical Rising Sash

Available Models:
Open By-Pass
Restricted By-Pass
Auxiliary Air

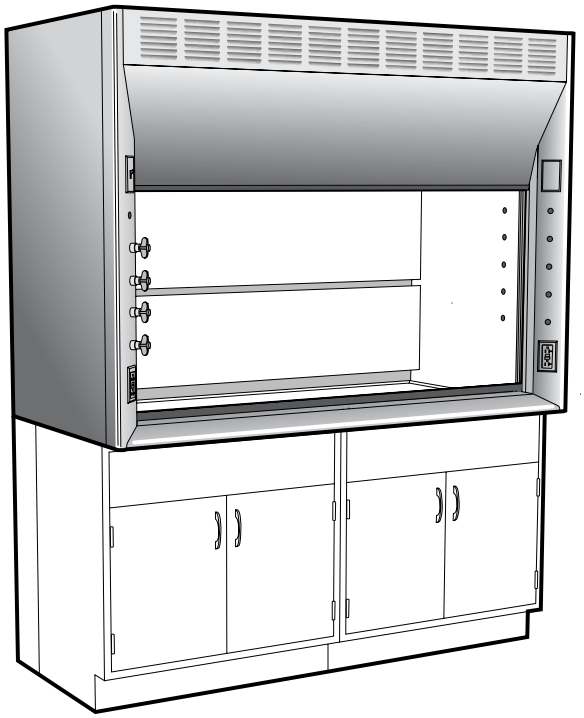

Available Option:

- Adjustable Baffles
- Air Flow and Static Pressure Alarms
- Service Fittings and Piping
- Electrical Fixtures and Wiring
- UL listed when pre-wired per UL 61010A-1
- Vapor Proof and Explosion Proof Lighting
- Stainless Steel Deflector Vane
- Alternate Sash Handles
- Sash Frame
- Tempered Sash Glass
- Tissue Screen
- Sash Stop

Features:

- Coved cornered, seamless welded stainless steel construction for easy cleaning and decontamination.
- Complete with integral worktop and hemispherical cupsink.
- Radiused corner posts and airfoils for smooth air movement assures high level of comfort, safety and efficiency.
- 4" thick endwalls provide more interior work space and clean-lined uncluttered design.
- Interior baffles designed to minimize turbulence and optimize containment.
- Frameless sash with full-length formed steel handle for neat, clean appearance and streamline air features.
- Low profile PVC sash tracks and exclusive sash leveling and alignment features assure easy-smooth sash operation
- Heavy gauge cold rolled steel exterior panels with independent rigid structural frame.
- Designed and tested using ASHRAE 110-1995, BS 7258, and DIN 12 924 standards.

KEWAUNEE

Supreme Air Fume Hood H20

Specifications:

Supreme Air Isotope Bench Fume Hoods are furnished with a type 304 stainless steel liner and baffles with upper, center, and lower exhaust slots. Each fume hood is complete with a lower deflector vane, counterbalanced, frameless sash of ¼" combination safety glass, dished worktop, and 5" diameter cupsink. Hood exteriors are fabricated of cold rolled steel, phosphate coated with a baked chemical resistant, synthetic resin finish. The exhaust duct collar is stainless steel, 11 15/16" O.D. (8 foot hoods are furnished with two duct collars.) Supreme Air Isotope Hoods are available with either an Open By-Pass or a Restricted By-Pass for VAV use. An auxiliary air chamber is available for use on the Open By-Pass hood.

Additional Parts Required to Make Up a Complete Fume Hood Assembly

Worktop	Jump to Section
Base Cabinets	casework catalogs
Service Fittings	Jump to Section
Cupsink	Jump to Section
Fan/Blower	Jump to Section

DIMENSIONS	HEIGHT		LENGTH				DEPTH
Overall Dimension	89¾"	**	48"	60"	72"	96"	36"
Sash Opening	28"	*	40"	52"	64"	88"	...
Worktop	37"	**	40"	52"	64"	88"	25½"
Clearance (sash up)	97"	**	...	...	...	...	...

* Sash opening height above airfoil. Add 1" in height to calculate sash opening area.
** Subtract 1" in height if wood base cabinets are used.

Overall Hood Length	Sash Opening Sq. Ft.	Total CFM and Static Pressure					
		80 FPM	S.P.	100 FPM	S.P.	120 FPM	S.P.
4'-0" / 48"	8.1	not recommended		810	0.25"	980	0.35"
5'-0" / 60"	10.5	not recommended		1050	0.30"	1260	0.45"
6'-0" / 72"	12.9	not recommended		1290	0.40"	1550	0.60"
8'-0" / 96"	17.7	not recommended		1770	0.25"	2130	0.35"

Static pressures shown are for the pressure drop through the hoods only. The total pressure drop through the hood and the duct system must be calculated to select the proper exhaust fan.

Note: CFM requirements shown above are for **Open By-Pass** hoods. The CFM requirements for a **Restricted By-Pass** hood with the sash fully open is the same as above. The by-pass opening with the sash closed is 20% of that with the sash fully open.

Stainless Steel Lining

Interior fume hood 14 gauge lining and 16 gauge baffles are type 304 stainless steel. The seamless welded 14 gauge, type 304 stainless steel worktop is dished ½" to retain spillage, and has an integrally welded 5" diameter cupsink at the left rear. (It is not recommended to punch vent holes in the worktop of isotope hoods for use with acid storage or vacuum pump storage base cabinets.)

Accessories Include: Two 120 volt AC 20 amp GFI receptacles, dual-lamp T8 LED light fixture, and 20 amp light switch. **No wiring for the electrical fixtures is included unless H-Option is selected.**

Optional Accessories: Each front post and interior end liner is punched for up to five (5) front loading remote control service fittings. The right hand post is punched for a second electrical fixture at the top which may be used for a fan switch or other electrical device. **Service fittings, fan, fan switch, and base units must be ordered separately.**

Isotope Bench Fume Hoods — Vertical Rising Sash

4'-0"

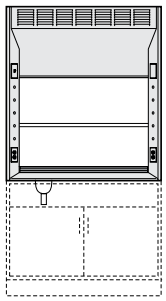

H20S543648N
Open By-Pass
H20S543648B
Restricted By-Pass

5'-0"

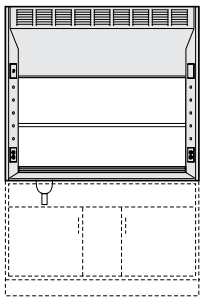

H20S543660N
Open By-Pass
H20S543660B
Restricted By-Pass

6'-0"

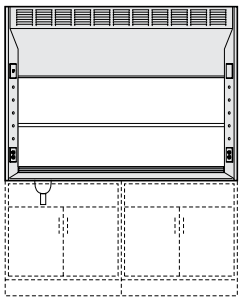

H20S543672N
Open By-Pass
H20S543672B
Restricted By-Pass

8'-0"

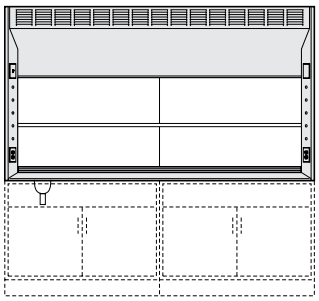

H20S543696N
Open By-Pass
H20S543696B
Restricted By-Pass

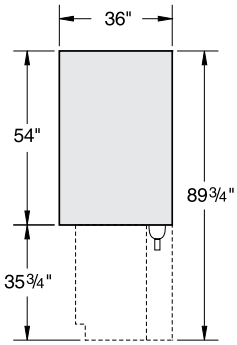

End View

Auxiliary Air

All Open By-Pass hoods can be Auxiliary Air hoods by adding an Auxiliary Air Chamber.

Notes: Open By-Pass Fume Hood shown. Restricted By-Pass Fume Hoods do not have louvered top front panel.

KEWAUNEE

Perchloric Acid Bench Fume Hood

with Vertical Rising Sash

Available Models:
Open By-Pass
Auxiliary Air

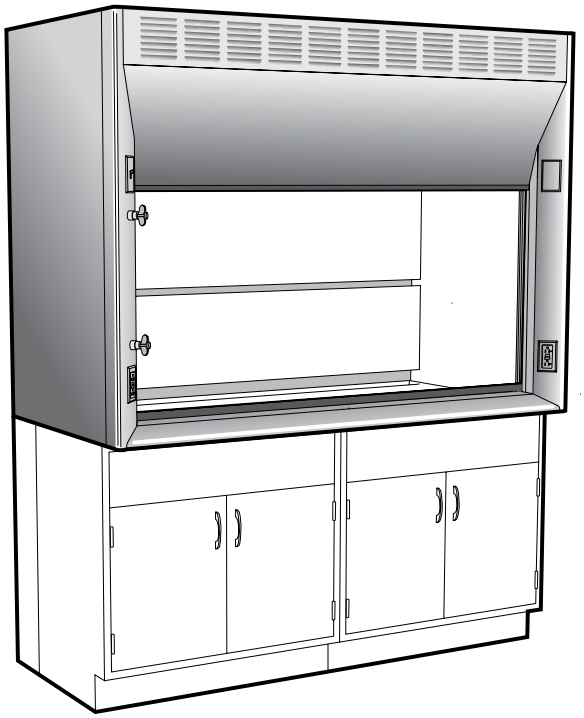

Features:

- Coved cornered, seamless welded type 316 stainless steel construction for easy cleaning and decontamination.
- Complete with integral worktop drain trough, cold water service fitting, and cold water hood washdown.
- Radiused corner posts and airfoils for smooth air movement assures high level of comfort, safety and efficiency.
- 4" thick endwalls provide more interior work space and clean-lined uncluttered design.
- Interior baffles designed to minimize turbulence and optimize containment.
- Frameless sash with full-length formed steel handle for neat, clean appearance and streamline air features.
- Low profile PVC sash tracks and exclusive sash leveling and alignment features assure easy-smooth sash operation
- Heavy gauge cold rolled steel exterior panels with independent rigid structural frame.
- Designed and tested using ASHRAE 110-1995, BS 7258, and DIN 12 924 standards.

Available Option:

Adjustable Baffles
Air Flow and Static Pressure Alarms
Service Fittings and Piping
Electrical Fixtures and Wiring
UL listed when pre-wired per UL 61010A-1
Explosion Proof Lighting
Stainless Steel Deflector Vane
Sash Frame
Tempered Sash Glass
Sash Stop

Supreme Air Fume Hood H25

Specifications:

Supreme Air Perchloric Acid Bench Fume Hoods are furnished with a stainless steel liner and baffles with upper, center, and lower exhaust slots. Each fume hood is complete with a lower deflector vane, counter balanced, frameless sash of ¼" combination safety glass, and a louvered top front panel. A full length perforated spray pipe is located behind the top baffle, and is provided to simplify periodic washdown procedures. Hood exteriors are fabricated of cold rolled steel, phosphate coated with a baked chemical resistant, synthetic resin finish. The exhaust duct collar is st. steel, 11 15/16" O.D. Perchloric Acid Hoods are available only with an Open By-Pass. An auxiliary air chamber is available.

Additional Parts Required to Make Up a Complete Fume Hood Assembly

Base Cabinets casework catalogs
Fan/Blower Jump to Section

* Only steel base cabinets are recommended for use under perchloric acid fume hoods.

DIMENSIONS	HEIGHT	LENGTH				DEPTH
Overall Dimension	89¾"	48"	60"	72"		36"
Sash Opening	28" *	40"	52"	64"		...
Worktop	37"	40"	52"	64"		25½"
Clearance (sash up)	97"	...	...	...	...	...

* Sash opening height above airfoil. Add 1" in height to calculate sash opening area.
Wood base cabinets are not recommended for use under perchloric acid fume hoods.

Overall Hood Length	Sash Opening Sq. Ft.	Total CFM and Static Pressure					
		80 FPM	S.P.	100 FPM	S.P.	120 FPM	S.P.
4'-0" / 48"	8.1	not recommended		not recommended		980	0.35"
5'-0" / 60"	10.5	not recommended		not recommended		1260	0.45"
6'-0" / 72"	12.9	not recommended		not recommended		1550	0.60"

Static pressures shown are for the pressure drop through the hoods only. The total pressure drop through the hood and the duct system must be calculated to select the proper exhaust fan.

Note: Due to the use of hot plates in perchloric acid hoods, Kewaunee recommends using a minimum of 120 FPM face velocity.

Stainless Steel Lining

Interior Perchloric Acid fume hood 14 gauge linings and 16 gauge baffles are type 316 stainless steel. The seamless welded 14 gauge, type 316 stainless steel worktop is dished ½" to retain spillage, and has an integrally welded trough sink at the rear.

Note: acid storage or vacuum pump storage cabinets can not be vented through perchloric acid fume hood worktops.

Accessories Include: Two front loaded remote controlled service fittings (one cold water, one cold water washdown), Two 120 volt AC 20 amp GFI receptacles, vapor-proof light fixture(s) (bulbs not included) with 20 amp light switch. **No wiring for the electrical fixtures is included unless H-Option is selected.**

Optional Accessories: The right hand post is punched for a second electrical fixture at the top which may be used for a fan switch or other electrical device. **Fan, fan switch, and base units must be ordered separately.**

Perchloric Acid Bench Fume Hoods — Vertical Rising Sash

4'-0"

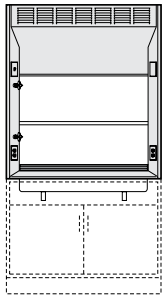

H25L543648N
Open By-Pass

5'-0"

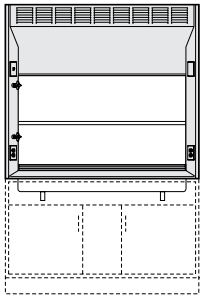

H25L543660N
Open By-Pass

6'-0"

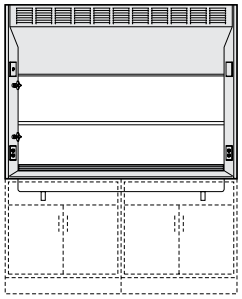

H25L543672N
Open By-Pass

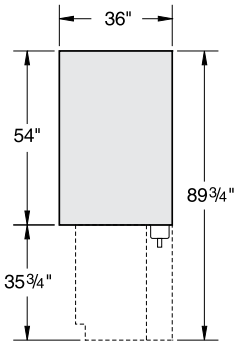

End View

Auxiliary Air
All Open By-Pass hoods can be Auxiliary Air hoods by adding an Auxiliary Air Chamber.

Note:

KEWAUNEE

Horizontal Sash – Bench Fume Hood

with Four Panel Horizontal Sash

Available Models:
Restricted By-Pass

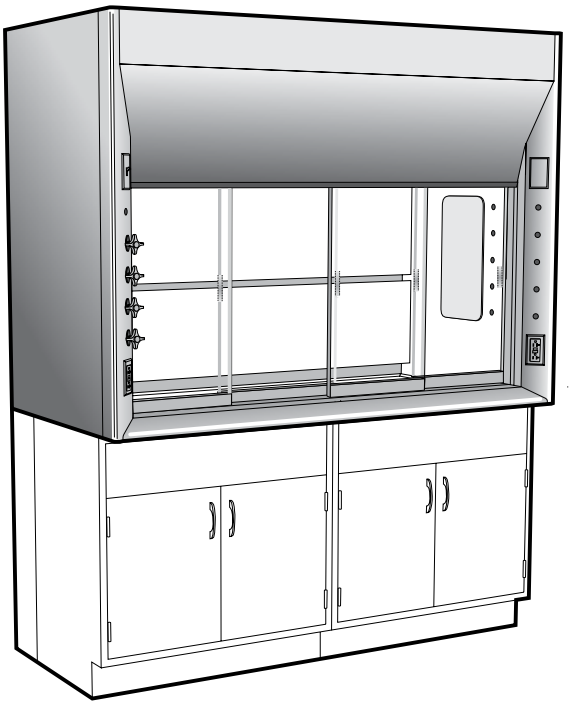

Available Option:

- Adjustable Baffles
- Air Flow and Static Pressure Alarms
- Service Fittings and Piping
- Electrical Fixtures and Wiring
- UL listed when pre-wired per UL 61010A-1
- 1805 UL classified with Kemglass or Stainless Steel liner
- Vapor Proof and Explosion Proof Lighting
- Stainless Steel Deflector Vane
- Sash Frame
- Tempered Sash Glass
- Tissue Screen
- Fire Extinguisher
- Distillation Rack
- Sash Stop
- Stainless Steel Duct Collar

Features:

- Radiused corner posts and airfoils for smooth air movement assures high level of comfort, safety and efficiency.
- 4" thick endwalls provide more interior work space and clean-lined uncluttered design.
- Interior baffles designed to minimize turbulence and optimize containment.
- Frameless, four-panel, two-track, horizontal sash with ¼" laminated safety glass for neat, clean appearance and streamline air features.
- Large friction-fit interior access panels provide easy access to piping and service fittings.
- Heavy gauge cold rolled steel exterior panels with independent rigid structural frame.
- Designed and tested using ASHRAE 110-1995, BS 7258, and DIN 12 924 standards.

Supreme Air Fume Hood H70

Specifications:

Supreme Air Horizontal Sash Bench Fume Hoods are furnished with a choice of liner and baffles with upper, center, and lower exhaust slots. Each fume hood is complete with a lower deflector vane, four-panel, frameless sash of ¼" combination safety glass and interior plumbing access panels. Hood exteriors are fabricated of cold rolled steel, phosphate coated with a baked chemical resistant, synthetic resin finish. The exhaust duct collar is polyethylene, 11 15/16" O.D. (8 foot hoods are furnished with two duct collars.) Supreme Air Bench Hoods are available only as a Restricted By-Pass hood. They may be used either with or without a VAV system.

Additional Parts Required to Make Up a Complete Fume Hood Assembly

Worktop	Jump to Section
Base Cabinets	casework catalogs
Service Fittings	Jump to Section
Cupsink	Jump to Section
Fan/Blower	Jump to Section

Liner Options:

T = Phenolic Resin

G = Kemglass
Fiberglass reinforced polyester

S = Type 304 Stainless Steel

The blank left in the fume hood catalog numbers is for designating the desired lining.

Example: H70**T**543648B would designate a 4' hood with a Phenolic Resin lining.

DIMENSIONS	HEIGHT	LENGTH				DEPTH
Overall Dimension	89¾" **	48"	60"	72"	96"	36"
Sash Opening	29" *	18½"	24½"	30½"	42½"	...
Worktop	37" **	40"	52"	64"	88"	25½"
Clearance (sash up)	89¾" **	...	...	...	...	...

* Sash opening height above airfoil. Add 1" in height to calculate sash opening area.
** Subtract 1" in height if wood base cabinets are used.

Overall Hood Length	Sash Opening Sq. Ft. *	Total CFM and Static Pressure					
		80 FPM	S.P.	100 FPM	S.P.	120 FPM	S.P.
4'-0" / 48"	5.2	410	0.10"	520	0.10"	620	0.15"
5'-0" / 60"	6.8	550	0.10"	680	0.15"	820	0.20"
6'-0" / 72"	8.5	680	0.15"	850	0.20"	1020	0.25"
8'-0" / 96"	11.8	940	0.10"	1180	0.15"	1410	0.15"

* At maximum sash opening. Includes By-Pass opening and 1" below deflector vane.

Static pressures shown are for the pressure drop through the hoods only. The total pressure drop through the hood and the duct system must be calculated to select the proper exhaust fan.

Accessories Include: Two 120 volt AC 20 amp GFI receptacles, dual-lamp T8 LED light fixture, and 20 amp light switch. **No wiring for the electrical fixtures is included unless H-Option is selected.**

Optional Accessories: Each front post and interior end liner is punched for up to five (5) remote control service fittings. The right hand post is punched for a second electrical fixture at the top which may be used for a fan switch or other electrical device. **Service fittings, fan, fan switch, worktop, cupsink, and base units must be ordered separately.**

Horizontal Sash Bench Fume Hoods — Four Panel Horizontal Sash

4'-0"

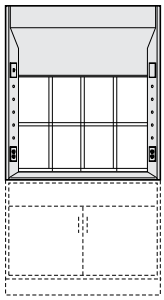

H70__543648B
Restricted By-Pass

5'-0"

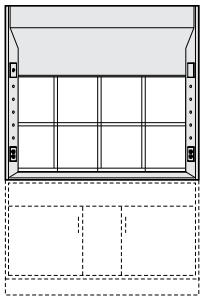

H70__543660B
Restricted By-Pass

6'-0"

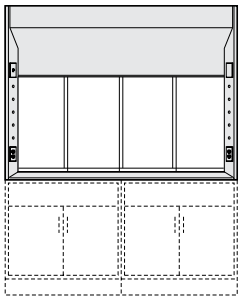

H70__543672B
Restricted By-Pass

8'-0"

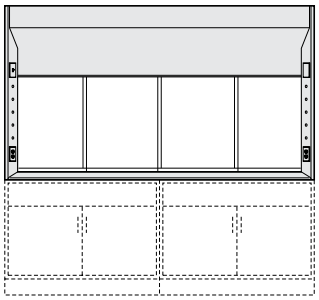

H70__543696B
Restricted By-Pass

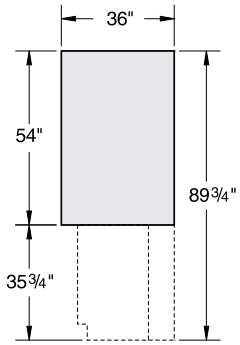

End View

Note:

KEWAUNEE

HOPEC Style Bench Fume Hood

with Combination Vertical Rising/Horizontal Sash

Available Models:
Restricted By-Pass

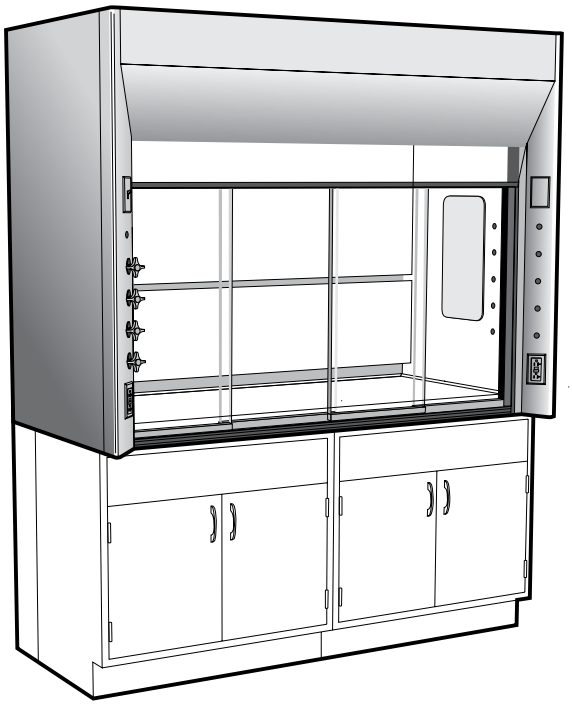

Features:

- Flush bottom airfoil with integral spill trough—painted stainless steel.
- Transparent Vision Panel standard, for increased hood interior visability.
- Radiused corner posts and airfoils for smooth air movement assures high level of comfort, safety and efficiency.
- 4" thick endwalls provide more interior work space and clean-lined uncluttered design.
- Interior baffles designed to minimize turbulence and optimize containment.
- Narrow framed sash with four horizontal glass panels on two tracks for neat clean appearance and improved exhaust efficiency.
- Low profile PVC sash tracks and exclusive sash leveling and alignment features assure easy-smooth sash operation
- Large friction-fit interior access panels provide easy access to piping and service fittings.
- Heavy gauge cold rolled steel exterior panels with independent rigid structural frame.
- Designed and tested using ASHRAE 110-1995, BS 7258, and DIN 12 924 standards.

Available Options:

Adjustable Baffles
Air Flow and Static Pressure Alarms
Service Fittings and Piping
Electrical Fixtures and Wiring
UL listed when pre-wired per UL 61010A-1
1805 UL classified with Kemglass
or Stainless Steel liner
Vapor Proof and Explosion Proof Lighting
Stainless Steel Sash Frame
Tempered Sash Glass
Tissue Screen
Fire Extinguisher
Distillation Rack
Sash Stops
Stainless Steel Duct Collar

Supreme Air Fume Hood HOP

Specifications:

HOPEC Style Supreme Air Bench Fume Hoods are furnished with a choice of liner and baffles with upper, center, and lower exhaust slots. Each fume hood is complete with a flush lower airfoil with integral spill trough, counterbalanced, narrow framed sash with ¼" combination safety glass horizontal panels, vision panel and interior plumbing access panels. Hood exteriors are fabricated of cold rolled steel, phosphate coated with a baked chemical resistant, synthetic resin finish. The exhaust duct collar is polyethylene, 11 15/16" O.D. (8 foot hoods are furnished with two duct collars.)

HOPEC Bench Hoods are available only with a Restricted By-Pass to match the restricted sash opening. They are designed for use with both constant volume and VAV applications. HOPEC Bench Hoods are not designed for use with Auxiliary Air Chambers.

Additional Parts Required to Make Up a Complete Fume Hood Assembly

Worktop	Jump to Section
Base Cabinets	casework catalogs
Service Fittings	Jump to Section
Cupsink	Jump to Section
Fan/Blower	Jump to Section

Liner Options:

T = Phenolic Resin

G = Kemglass
Fiberglass reinforced polyester

S = Type 304 Stainless Steel

The blank left in the fume hood catalog numbers is for designating the desired lining.

Example: HOP**T**543648B would designate a 4' hood with a Phenolic Resin lining.

DIMENSIONS	HEIGHT	LENGTH				DEPTH
Overall Dimension	88¾"	48"	60"	72"	96"	36"
Sash Opening	29"	40"	52"	64"	88"	...
Worktop	36"	40"	52"	64"	88"	25½"
Clearance (sash up)	97"	...	...	...	...	...

Overall Hood Length	Sash Opening Sq. Ft. *	Total CFM and Static Pressure					
		80 FPM	S.P.	100 FPM	S.P.	120 FPM	S.P.
4'-0" / 48"	4.0	320	0.05"	400	0.05"	490	0.10"
5'-0" / 60"	5.4	430	0.05"	540	0.10"	650	0.15"
6'-0" / 72"	6.8	540	0.10"	680	0.15"	820	0.20"
8'-0" / 96"	9.5	760	0.05"	950	0.10"	1150	0.10"

* Maximum sash opening with vertical sash down and horizontal panels fully open. Includes By-Pass opening and 1" below deflector vane.

Static pressures shown are for the pressure drop through the hoods only. The total pressure drop through the hood and the duct system must be calculated to select the proper exhaust fan.

Accessories Include: Two 120 volt AC 20 amp GFI receptacles, dual-lamp T8 LED light fixture, and 20 amp light switch. **No wiring for the electrical fixtures is included unless H-Option is selected.**

Optional Accessories: Each front post and interior end liner is punched for up to five (5) remote control service fittings. The right hand post is punched for a second electrical fixture at the top which may be used for a fan switch or other electrical device. **Service fittings, fan, fan switch, worktop, cupsink, and base units must be ordered separately.**

HOPEC Bench Fume Hoods — Combination Vertical Rising/Horizontal Sash

4'-0"

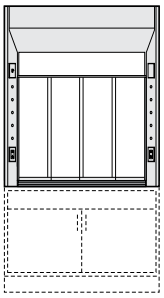

HOP__543648B
Restricted By-Pass

5'-0"

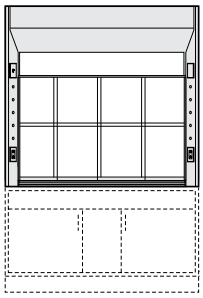

HOP__543660B
Restricted By-Pass

6'-0"

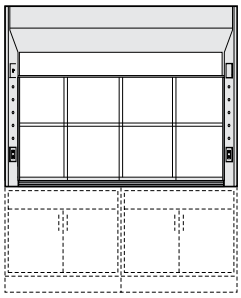

HOP__543672B
Restricted By-Pass

8'-0"

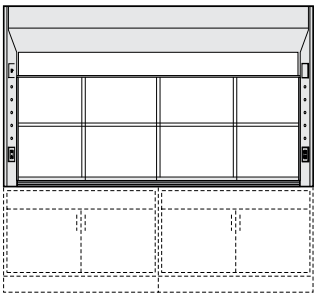

HOP__543696B
Restricted By-Pass

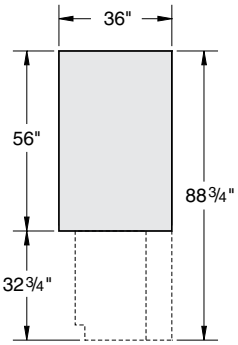

End View

Note:

KEWAUNEE

General Purpose Walk-In Fume Hood

with Vertical Rising Sash

Available Models:
Open By-Pass
Restricted By-Pass
Auxiliary Air

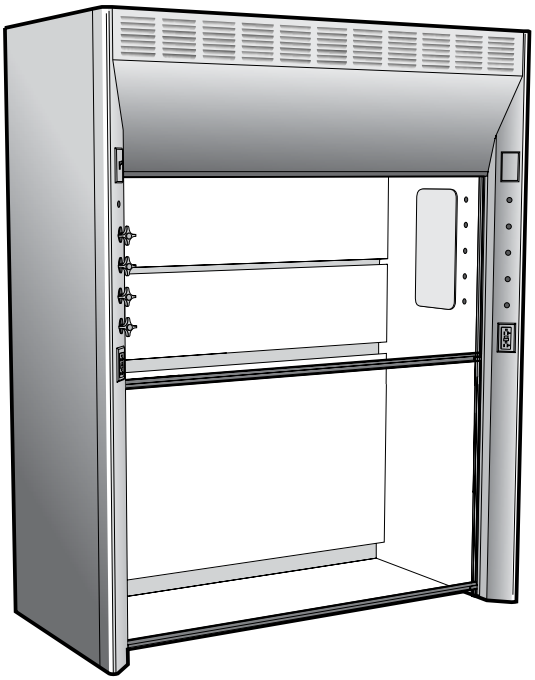

Features:

- Radiused corner posts and airfoils for smooth air movement assures high level of comfort, safety and efficiency.
- 4" thick endwalls provide more interior work space and clean-lined uncluttered design.
- Interior baffles designed to minimize turbulence and optimize containment.
- Frameless sashes with full-length formed steel handle for neat, clean appearance and streamline air features.
- Low profile PVC sash tracks and exclusive sash leveling and alignment features assure easy-smooth sash operation
- Large friction-fit interior access panels provide easy access to piping and service fittings.
- Heavy gauge cold rolled steel exterior panels with independent rigid structural frame.
- Designed and tested using ASHRAE 110-1995, BS 7258, and DIN 12 924 standards.

Available Option:

Adjustable Baffles
Air Flow and Static Pressure Alarms
Service Fittings and Piping
Electrical Fixtures and Wiring
UL listed when pre-wired per UL 61010A-1
1805 UL classified with Kemglass or Stainless Steel liner
Vapor Proof and Explosion Proof Lighting
Stainless Steel Deflector Vane
Alternate Sash Handles
Sash Frame
Tempered Sash Glass
Tissue Screen
Fire Extinguisher
Distillation Rack
Sash Stop
Stainless Steel Duct Collar
Work Floor & Removable Work Shelf

KEWAUNEE

Supreme Air Fume Hood H30

Specifications:

Supreme Air General Purpose Walk-In Fume Hoods are furnished with a choice of liner and baffles with upper, center, and lower exhaust slots. Each fume hood is complete with two counter- balanced, frameless sashes of ¼" combination safety glass and interior plumbing access panels. Hood exteriors are fabricated of cold rolled steel, phosphate coated with a baked chemical resistant, synthetic resin finish. The exhaust duct collar is polyethylene, 11 15/16" O.D. (8 foot hoods are furnished with two duct collars.) Supreme Air Walk-In Hoods are available with either an Open By-Pass or a Restricted By-Pass for VAV use. An auxiliary air chamber is available for use on the Open By-Pass hood.

Additional Parts Required to Make Up a Complete Fume Hood Assembly

Worktop	Jump to Section
Base Cabinets	casework catalogs
Service Fittings	Jump to Section
Cupsink	Jump to Section
Fan/Blower	Jump to Section

DIMENSIONS	HEIGHT	LENGTH				DEPTH
Overall Dimension	89¾"	48"	60"	72"	96"	36"
Sash Opening	28" *	40"	52"	64"	88"	...
Optional Work Shelf	37"	40"	52"	64"	88"	24½"
Clearance (sash up)	103"	...	...	...	...	...

* Upper sash opening height above lower sash. Add 1" in height to calculate sash opening area.

Overall Hood Length	Sash Opening Sq. Ft.	Total CFM and Static Pressure					
		80 FPM	S.P.	100 FPM	S.P.	120 FPM	S.P.
4'-0" / 48"	8.1 *	650	0.15"	810	0.25"	980	0.35"
5'-0" / 60"	10.5 *	840	0.20"	1050	0.30"	1260	0.45"
6'-0" / 72"	12.9 *	1040	0.25"	1290	0.40"	1550	0.60"
8'-0" / 96"	17.7 *	1420	0.15"	1770	0.25"	2130	0.35"

* Includes Upper Sash Opening only and 1" opening below lower sash.

Static pressures shown are for the pressure drop through the hoods only. The total pressure drop through the hood and the duct system must be calculated to select the proper exhaust fan.

Note: CFM requirements shown above are for **Open By-Pass** hoods. The CFM requirements for a **Restricted By-Pass** hood with the sash fully open is the same as above. The by-pass opening with the sash closed is 20% of that with the sash fully open.

Liner Options:

T = Phenolic Resin

G = Kemglass
Fiberglass reinforced polyester

S = Type 304 Stainless Steel

The blank left in the fume hood catalog numbers is for designating the desired lining.

Example: H30**T**903648N would designate a 4' hood with a Phenolic Resin lining.

Accessories Include: Two 120 volt AC 20 amp GFI receptacles, dual-lamp T8 LED light fixture, and 20 amp light switch. **No wiring for the electrical fixtures is included unless H-Option is selected.**

Optional Accessories: Each front post and interior end liner is punched for up to five (5) remote control service fittings. The right hand post is punched for a second electrical fixture at the top which may be used for a fan switch or other electrical device. **Service fittings, fan, fan switch, optional work floor, and removable work shelf must be ordered separately.**

General Purpose Walk-In Fume Hoods — Vertical Rising Sash

4'-0"

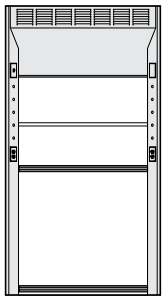

H30__903648N
Open By-Pass
H30__903648B
Restricted By-Pass

5'-0"

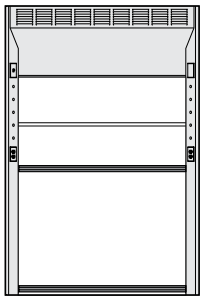

H30__903660N
Open By-Pass
H30__903660B
Restricted By-Pass

6'-0"

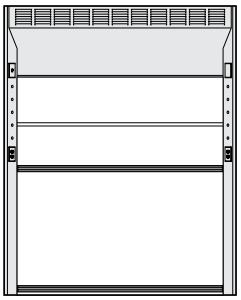

H30__903672N
Open By-Pass
H30__903672B
Restricted By-Pass

8'-0"

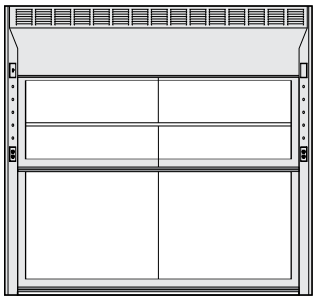

H30__903696N
Open By-Pass
H30__903696B
Restricted By-Pass

8' Walk-In Hood available with framed sash only.

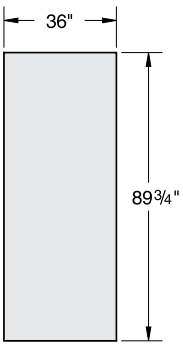

End View

Auxiliary Air

All Open By-Pass hoods can be Auxiliary Air hoods by adding an Auxiliary Air Chamber.

Notes: Open By-Pass Fume Hood shown. Restricted By-Pass Fume Hoods do not have louvered top front panel.

KEWAUNEE

Ultra Low Constant Volume Fume Hood

with Low-flow Combination Vertical Rising/Horizontal Sash

Available Models:
Dynamic Barrier By-Pass

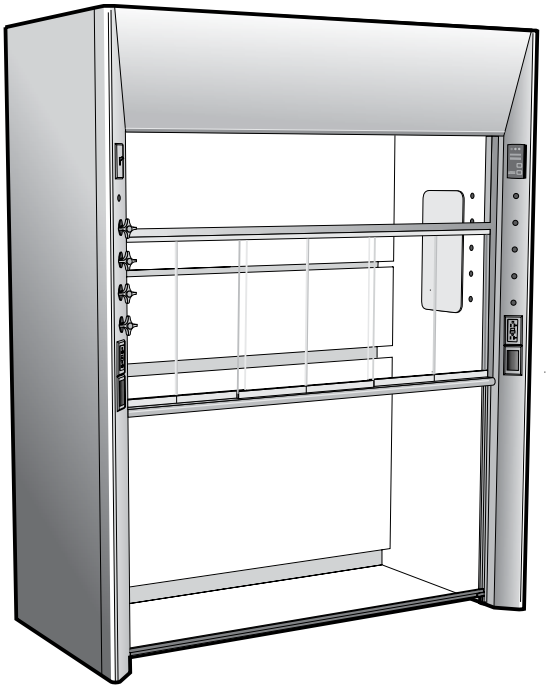

Features:

- Requires over 60 percent less exhaust air volume than a traditional by-pass fume hood.
- Extra large vertical sash design allows full view into hood interior and 73" opening height for apparatus setup.
- Radiused corner posts and airfoils for smooth air movement assures high level of comfort, safety and efficiency.
- 4" thick endwalls provide more interior work space and clean-lined uncluttered design.
- Low profile sash frame for easy access through horizontal panels.
- Service ports provide convenient, safe passage for equipment connections.
- Exclusive Air Alert 600 Monitor provides a visual one-hour timeline of fume hood performance.
- Exclusive static pressure averaging mechanism provides accurate face velocity readings regardless of sash opening.
- Quiet fume hood operation, under 40 dBA with properly sized fans and ductwork.
- Designed and tested using ASHRAE 110-1995, BS 7258, and DIN 12 924 standards.

Available Option:

Service Fittings and Piping
Electrical Fixtures and Wiring
UL listed when pre-wired per UL 61010A-1
1805 UL classified with Kemglass or Stainless Steel liner
Lighting
Stainless Steel Deflector Vane
Tempered Sash Glass
Tissue Screen
Fire Extinguisher
Distillation Rack
Stainless Steel Duct Collar
Removable Work Shelf

Dynamic Barrier Fume Hood H52

Specifications:

Dynamic Barrier Supreme Air Walk-In Fume Hoods are furnished with a choice of liner and baffles with center and lower exhaust slots and interior plumbing access panels. Each fume hood is complete with a counter balanced, extra large, low-flow narrow framed upper sash with six horizontal panels, and a frameless lower sash of ¼" combination safety glass, and an Air Alert 600 Monitor with static pressure averaging. Hood exteriors are fabricated of cold rolled steel, phosphate coated with a baked chemical resistant, synthetic resin finish. The exhaust duct collar is polyethylene, 7 15/16" O.D. (8 foot hoods are furnished with two duct collars.)

Dynamic Barrier Supreme Air Walk-In Hoods are not designed for use with auxiliary air chambers.

Additional Parts Required to Make Up a Complete Fume Hood Assembly

Worktop	Jump to Section
Base Cabinets	casework catalogs
Service Fittings	Jump to Section
Cupsink	Jump to Section
Fan/Blower	Jump to Section

DIMENSIONS	HEIGHT	LENGTH				DEPTH
Overall Dimension	89¾"	48"	60"	72"	96"	36"
Sash Opening	37"	40"	52"	64"	88"	...
Optional Work Shelf	37"	40"	52"	64"	88"	24½"
Clearance (sash up)	113"	...	...	...	...	...

Overall Hood Length	Maximum Face Opening of Horizontal Sashes				Face Opening with Vertical Sash at 10" Sash Stop				Total CFM and Static Pressure	
	W	H	Ft²*	Velocity	W	H	Ft²*	Velocity	CFM	S.P.
4'-0" / 48"	14½"	22"	3.00	100 fpm	40"	10"	3.53	85fpm	300	0.17"
5'-0" / 60"	18"	22"	4.00	100 fpm	52"	10"	4.81	85fpm	400	0.23"
6'-0" / 72"	22"	22"	5.00	100 fpm	64"	10"	5.94	85fpm	500	0.37"
8'-0" / 96"	30"	22"	6.75	100 fpm	88"	10"	8.01	85fpm	675	0.20"

* Includes free area contributions from sash clearance spaces and by-pass opening.

Static pressures shown are for the pressure drop through the hoods only. The total pressure drop through the hood and the duct system must be calculated to select the proper exhaust fan.

Liner Options:

T = Phenolic Resin

G = Kemglass
Fiberglass reinforced polyester

S = Type 304 Stainless Steel

The blank left in the fume hood catalog numbers is for designating the desired lining.

Example: H52**T**903648N would designate a 4' hood with a Phenolic Resin lining.

Accessories Include: Two 120 volt AC 20 amp GFI receptacles, dual-lamp T8 LED light fixture, and 20 amp light switch, Air Alert 600 Air Flow Monitor and two cord ports. **No wiring for the electrical fixtures is included unless H-Option is added to part number.**

Optional Accessories: Each front post and interior end liner is punched for up to five (5) remote control service fittings. **Service fittings, fan, fan switch, optional work floor and work shelf must be ordered separately.**

Dynamic Barrier Walk-In Fume Hoods — Low-flow Combination Vertical Rising/Horizontal Sash

4'-0"

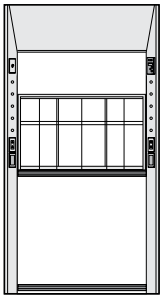

H52__903648N

5'-0"

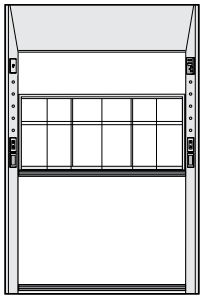

H52__903660N

6'-0"

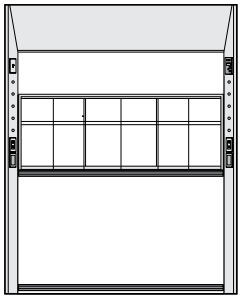

H52__903672N

8'-0"

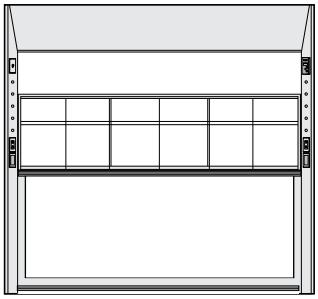

H52__903696N

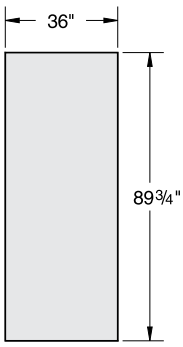

End View

Note:

KEWAUNEE

Combination Sash – Walk-In Fume Hood

with Combination Vertical Rising/Horizontal Sash

Available Models:
Restricted By-Pass
Open By-Pass
(by special request only)

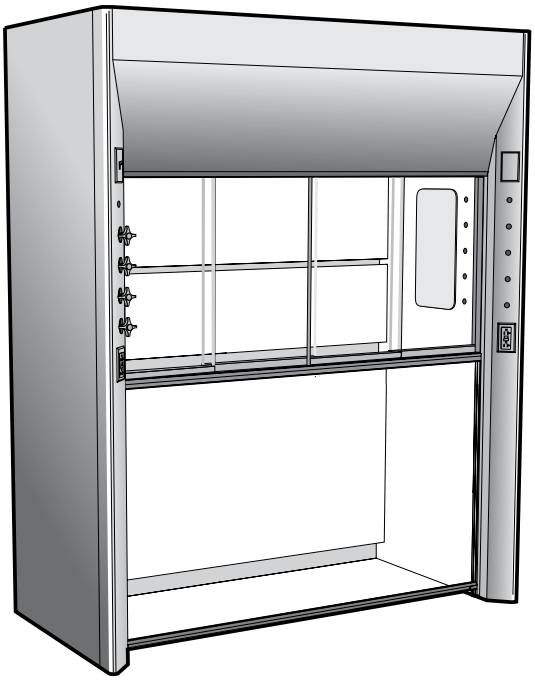

Available Option:

- Adjustable Baffles
- Air Flow and Static Pressure Alarms
- Service Fittings and Piping
- Electrical Fixtures and Wiring
- UL listed when pre-wired per UL 61010A-1
- 1805 UL classified with Kemglass or Stainless Steel liner
- Vapor Proof and Explosion Proof Lighting
- Stainless Steel Deflector Vane
- Sash Frame
- Tempered Sash Glass
- Tissue Screen
- Fire Extinguisher
- Distillation Rack
- Sash Stop
- Stainless Steel Duct Collar
- Work Floor & Removable Work Shelf

Features:

- Radiused corner posts and airfoils for smooth air movement assures high level of comfort, safety and efficiency.
- 4" thick endwalls provide more interior work space and clean-lined uncluttered design.
- Interior baffles designed to minimize turbulence and optimize containment.
- Narrow framed upper sash with four horizontal glass panels on two tracks, frameless lower sash with full-length formed steel handle for neat, clean appearance and streamline air features.
- Low profile PVC sash tracks and exclusive sash leveling and alignment features assure easy-smooth sash operation
- Large friction-fit interior access panels provide easy access to piping and service fittings.
- Heavy gauge cold rolled steel exterior panels with independent rigid structural frame.
- Designed and tested using ASHRAE 110-1995, BS 7258, and DIN 12 924 standards.

Supreme Air Fume Hood H32

Specifications:

Supreme Air Combination Sash Walk-In Fume Hoods are furnished with a choice of liner and baffles with upper, center, and lower exhaust slots. Each fume hood is complete with a counter balanced, narrow framed upper sash with horizontal panels, and a frameless lower sash of ¼" combination safety glass and interior plumbing access panels. Hood exteriors are fabricated of cold rolled steel, phosphate coated with a baked chemical resistant, synthetic resin finish. The exhaust duct collar is polyethylene, 11 15/16" O.D. (8 foot hoods are furnished with two duct collars.)

Combination Sash Walk-In Hoods are furnished with a Restricted By-Pass to match the restricted sash opening. They are designed for use with both constant volume and VAV applications. An Open By-Pass is available on request for applications where the hood is operated with the sash fully open. Combination Sash Walk-In Hoods are not designed for use with Auxiliary Air Chambers.

Additional Parts Required to Make Up a Complete Fume Hood Assembly

Worktop	Jump to Section
Base Cabinets	casework catalogs
Service Fittings	Jump to Section
Cupsink	Jump to Section
Fan/Blower	Jump to Section

Liner Options:

T = Phenolic Resin

G = Kemglass
Fiberglass reinforced polyester

S = Type 304 Stainless Steel

The blank left in the fume hood catalog numbers is for designating the desired lining.

Example: H32**T**903648B would designate a 4' hood with a Phenolic Resin lining.

DIMENSIONS	HEIGHT	LENGTH				DEPTH
Overall Dimension	89¾"	48"	60"	72"	96"	36"
Sash Opening	28" *	40"	52"	64"	88"	...
Optional Work Shelf	37"	40"	52"	64"	88"	24½"
Clearance (sash up)	103"	...	...	...	...	...

* Upper sash opening height above lower sash.

Overall Hood Length	Sash Opening Sq. Ft. *	Total CFM and Static Pressure					
		80 FPM	S.P.	100 FPM	S.P.	120 FPM	S.P.
4'-0" / 48"	4.8	380	0.05"	480	0.10"	580	0.15"
5'-0" / 60"	6.3	500	0.10"	630	0.15"	760	0.20"
6'-0" / 72"	7.8	620	0.10"	780	0.15"	940	0.25"
8'-0" / 96"	10.9	870	0.10"	1090	0.10"	1310	0.15"

* Maximum sash opening with vertical sash down and horizontal panels fully open. Includes By-Pass opening and 1" below deflector vane.

Static pressures shown are for the pressure drop through the hoods only. The total pressure drop through the hood and the duct system must be calculated to select the proper exhaust fan.

Accessories Include: Two 120 volt AC 20 amp GFI receptacles, dual-lamp T8 LED light fixture, and 20 amp light switch. **No wiring for the electrical fixtures is included unless H-Option is selected.**

Optional Accessories: Each front post and interior end liner is punched for up to five (5) remote control service fittings. The right hand post is punched for a second electrical fixture at the top which may be used for a fan switch or other electrical device. **Service fittings, fan, fan switch, optional work floor, and removable work shelf must be ordered separately.**

Combination Sash Walk-In Fume Hoods — Combination Vertical Rising/Horizontal Sash

4'-0" 5'-0" 6'-0" 8'-0"

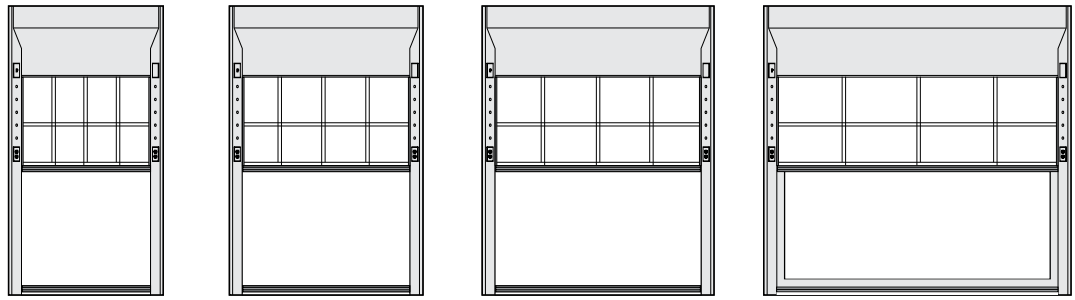

H32__903648B Restricted By-Pass

H32__903660B Restricted By-Pass

H32__903672B Restricted By-Pass

H32__903696B Restricted By-Pass

Open By-Pass by special request

8' Walk-In Hood available with framed sash only.

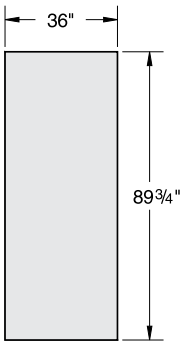

End View

Notes: Restricted By-Pass Fume Hood shown. Open By-Pass Fume Hoods do not have louvered top front panel.

KEWAUNEE

Horizontal Sash – Walk-In Fume Hood

with Three Panel Horizontal Sash

Available Models:
Restricted By-Pass

Available Option:

- Adjustable Baffles
- Air Flow and Static Pressure Alarms
- Service Fittings and Piping
- Electrical Fixtures and Wiring
- UL listed when pre-wired per UL 61010A-1
- 1805 UL classified with Kemglass or Stainless Steel liner
- Vapor Proof and Explosion Proof Lighting
- Stainless Steel Deflector Vane
- Stainless Steel Sash Frame
- Tempered Sash Glass
- Tissue Screen
- Fire Extinguisher
- Distillation Rack
- Sash Stop
- Stainless Steel Duct Collar
- Work Floor & Removable Work Shelf

Features:

- Radiused corner posts and airfoils for smooth air movement assures high level of comfort, safety and efficiency.
- 4" thick endwalls provide more interior work space and clean-lined uncluttered design.
- Interior baffles designed to minimize turbulence and optimize containment.
- Three panel framed sash, hung from full length triple track overhead carrier on nylon rollers for smooth operation and easy access.
- Large friction-fit interior access panels provide easy access to piping and service fittings.
- Heavy gauge cold rolled steel exterior panels with independent rigid structural frame.
- Designed and tested using ASHRAE 110-1995, BS 7258, and DIN 12 924 standards.

Supreme Air Fume Hood H34

Specifications:

Supreme Air Horizontal Sash Walk-In Fume Hoods are furnished with a choice of liner and baffles with upper, center, and lower exhaust slots. Each fume hood is complete with three panel framed sash of ¼" combination safety glass, hanging on a triple track overhead carrier and interior plumbing access panels. Hood exteriors are fabricated of cold rolled steel, phosphate coated with a baked chemical resistant, synthetic resin finish. They are furnished with two polyethylene exhaust duct collars, 11 15/16" O.D.

Supreme Air Horizontal Sash Walk-In Fume Hoods are available with a Restricted By-Pass only. They may be used either with or without a VAV system.

Additional Parts Required to Make Up a Complete Fume Hood Assembly

Worktop	Jump to Section
Base Cabinets	casework catalogs
Service Fittings	Jump to Section
Cupsink	Jump to Section
Fan/Blower	Jump to Section

DIMENSIONS	HEIGHT	LENGTH			DEPTH
Overall Dimension	89¾"	72"	96"	120"	36"
Sash Opening	67¾"	41"	57"	73"	...
Optional Work Shelf	37"	64"	64"	112"	22½"

Overall Hood Length	Sash Opening Sq. Ft.	Total CFM and Static Pressure					
		80 FPM	S.P.	100 FPM	S.P.	120 FPM	S.P.
6'-0" / 72"	22.1 *	1770	0.35"	2210	0.50"	2650	0.70"
8'-0" / 96"	30.7 *	2460	0.45"	3070	0.70"	3680	1.00"
10'-0" / 120"	39.3 *	3140	0.65"	3930	1.00"	4710	1.40"

* Maximum sash opening plus By-Pass opening and 1" opening below sash.

Static pressures shown are for the pressure drop through the hoods only. The total pressure drop through the hood and the duct system must be calculated to select the proper exhaust fan.

Liner Options:

T = Phenolic Resin

G = Kemglass
Fiberglass reinforced polyester

S = Type 304 Stainless Steel

The blank left in the fume hood catalog numbers is for designating the desired lining.

Example: H34**T**903672B would designate a 6' hood with a Phenolic Resin lining.

Accessories Include: Two 120 volt AC 20 amp GFI receptacles, dual-lamp T8 LED light fixture, and 20 amp light switch. **No wiring for the electrical fixtures is included unless H-Option is selected.**

Optional Accessories: Each front post and interior end liner is punched for up to five (5) remote control service fittings. The right hand post is punched for a second electrical fixture at the top which may be used for a fan switch or other electrical device. **Service fittings, fan, fan switch, optional work floor and removable work shelf must be ordered separately.**

Horizontal Sash Walk-In Fume Hood — With Three Panel Horizontal Sash

6'-0"

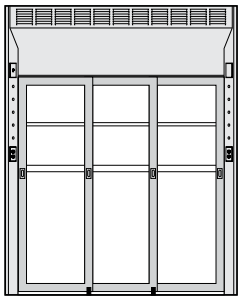

H34__903672B
Restricted By-Pass

8'-0"

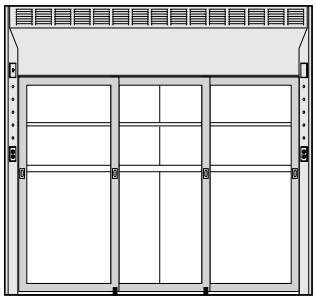

H34__903696B
Restricted By-Pass

10'-0"

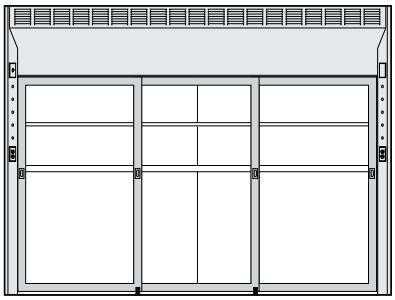

H34__903620B
Restricted By-Pass

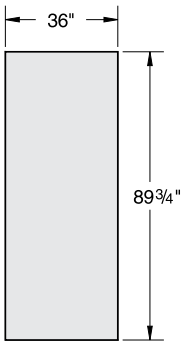

End View

Consult your Kewaunee representative or the factory for other sash arrangements.

Note:

KEWAUNEE

Distillation Fume Hood

with Vertical Rising Sash

Available Models:
Open By-Pass
Restricted By-Pass
Auxiliary Air

Features:

- Radiused corner posts and airfoils for smooth air movement assures high level of comfort, safety and efficiency.
- 4" thick endwalls provide more interior work space and clean-lined uncluttered design.
- Interior baffles designed to minimize turbulence and optimize containment.
- Frameless sashes with full-length formed steel handle for neat, clean appearance and streamline air features.
- Low profile PVC sash tracks and exclusive sash leveling and alignment features assure easy-smooth sash operation
- Large friction-fit interior access panels provide easy access to piping and service fittings.
- Heavy gauge cold rolled steel exterior panels with independent rigid structural frame.
- Designed and tested using ASHRAE 110-1995, BS 7258, and DIN 12 924 standards.

Available Option:

Adjustable Baffles
Air Flow and Static Pressure Alarms
Service Fittings and Piping
Electrical Fixtures and Wiring
UL listed when pre-wired per UL 61010A-1
1805 UL classified with Kemglass or Stainless Steel liner
Vapor Proof and Explosion Proof Lighting
Stainless Steel Deflector Vane
Sash Frame & Tempered Sash Glass
Tissue Screen
Fire Extinguisher
Distillation Rack
Sash Stop
Stainless Steel Duct Collar
Removable Work Shelf

Supreme Air Fume Hood H36

Specifications:

Supreme Air Distillation Fume Hoods are furnished with a choice of liner and baffles with upper, center, and lower exhaust slots. Each fume hood is complete with a lower deflector vane, two counterbalanced, frameless sash of ¼" combination safety glass and interior plumbing access panels.

Hood exteriors are fabricated of cold rolled steel, phosphate coated with a baked chemical resistant, synthetic resin finish. The exhaust duct collar is polyethylene, 11 15/16" O.D. (8 foot hoods are furnished with two duct collars.)

Supreme Air Distillation Hoods are available with either an Open By-Pass or a Restricted By-Pass for VAV use. An auxiliary air chamber is available for use on the Open By-Pass hood.

Additional Parts Required to Make Up a Complete Fume Hood Assembly

Worktop	Jump to Section
Base Cabinets	casework catalogs
Service Fittings	Jump to Section
Cupsink	Jump to Section
Fan/Blower	Jump to Section

Liner Options:

T = Phenolic Resin

G = Kemglass
Fiberglass reinforced polyester

S = Type 304 Stainless Steel

The blank left in the fume hood catalog numbers is for designating the desired lining.

Example: H36**T**903648N would designate a 4' hood with a Phenolic Resin lining.

DIMENSIONS	HEIGHT	LENGTH				DEPTH
Overall Dimension	106½"	48"	60"	72"	96"	36"
Lower Sash Opening	35¾" *	40"	52"	64"	88"	...
Worktop	18"	40"	52"	64"	88"	25½"
Optional Work Shelf	37"	40"	52"	64"	88"	24½"
Clearance (sash up)	119¾"	...	...	...	...	...

* Sash opening height above airfoil. Add 1" in height to calculate sash opening area.

Overall Hood Length	Sash Opening Sq. Ft.	Total CFM and Static Pressure					
		80 FPM	S.P.	100 FPM	S.P.	120 FPM	S.P.
4'-0" / 48"	11.6 *	930	0.30"	1160	0.45"	1400	0.65"
5'-0" / 60"	15.1 *	1210	0.40"	1510	0.60"	1820	0.90"
6'-0" / 72"	18.6 *	1490	0.55"	1860	0.85"	2240	1.20"
8'-0" / 96"	25.5 *	2040	0.35"	2550	0.50"	3060	0.70"

* Includes lower sash opening and 1" opening below defector vane.

Static pressures shown are for the pressure drop through the hoods only. The total pressure drop through the hood and the duct system must be calculated to select the proper exhaust fan.

Note: CFM requirements shown above are for **Open By-Pass** hoods. The CFM requirements for a **Restricted By-Pass** hood with the sash fully open is the same as above. The by-pass opening with the sash closed is 20% of that with the sash fully open.

Accessories Include: Two 120 volt AC 20 amp GFI receptacles, dual-lamp T8 LED light fixture, and 20 amp light switch. **No wiring for the electrical fixtures is included unless H-Option is selected.**

Optional Accessories: Each front post and interior end liner is punched for up to five (5) remote control service fittings. The right hand post is punched for a second electrical fixture at the top which may be used for a fan switch or other electrical device. **Hood base, service fittings, fan, fan switch, worktop, cupsink, and optional removable work shelf must be ordered separately.**

Distillation Fume Hoods — Vertical Rising Sash

4'-0"

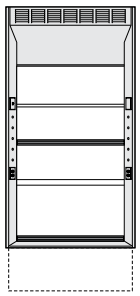

H36__903648N
Open By-Pass
H36__903648B
Restricted By-Pass

5'-0"

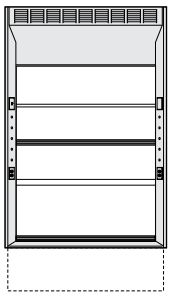

H36__903660N
Open By-Pass
H36__903660B
Restricted By-Pass

6'-0"

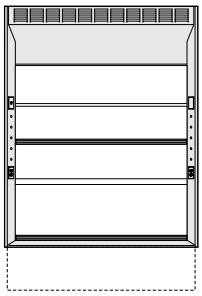

H36__903672N
Open By-Pass
H36__903672B
Restricted By-Pass

8'-0"

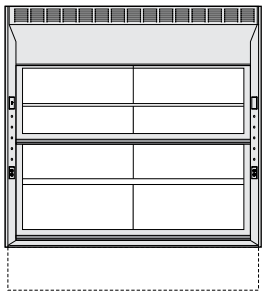

H36__903696N
Open By-Pass
H36__903696B
Restricted By-Pass

8' Distillation Hood available with framed sash only.

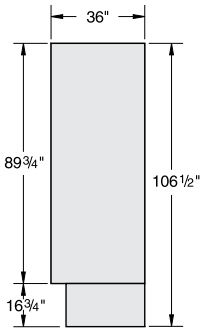

End View

Distillation Hood – Base Assemblies

HUSM172248N	**HUSM172260N**	**HUSM172272N**	**HUSM172296N**	Steel Base Assembly
HUSW172248N	**HUSW172260N**	**HUSW172272N**	**HUSW172296N**	Wood Base Assembly

Auxiliary Air

All Open By-Pass hoods can be Auxiliary Air hoods by adding an Auxiliary Air Chamber.

Notes: Open By-Pass Fume Hood shown. Restricted By-Pass Fume Hoods do not have louvered top front panel.

KEWAUNEE

Auxiliary Air Chambers

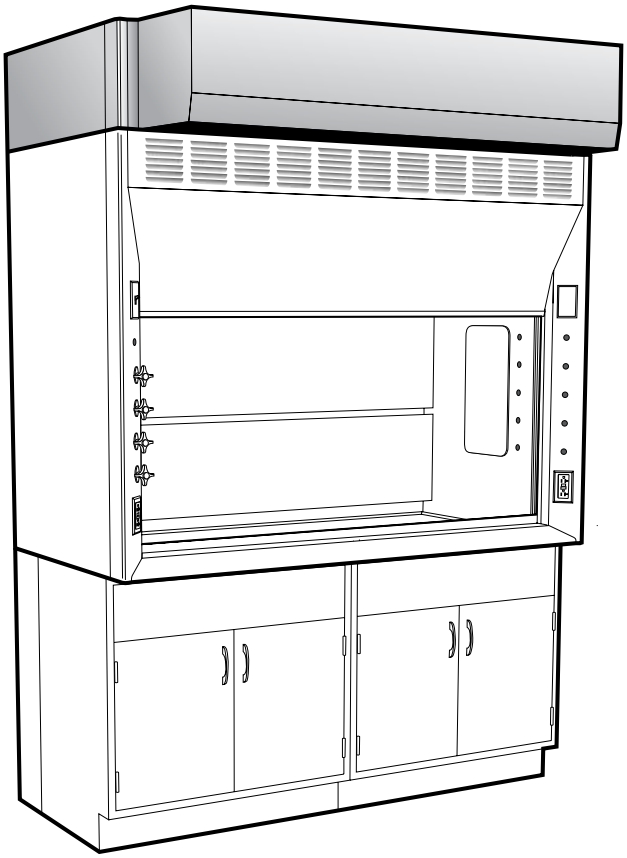

Available for following Hoods:

- H05 General Purpose Bench Hood
- H08 ADA Bench Hood
- H10 Split Sash Bench Hood
- H20 Isotope Bench Hood
- H25 Perchloric Acid Bench Hood
- H30 General Purpose Walk-In Hood
- H36 Distillation Hood

Features:

- Provides up to 70 percent of the total exhaust air used by the hood, thereby saving energy an lowering operation costs.
- Include sash pocket enclosure and closure panels to back of hood for clean modern design.
- May be added to any Open By-Pass Supreme Air Fume Hood when originally installed or a later date.
- May be added to existing Supreme Air hood without disconnecting the exhaust duct.
- Heavy gauge cold rolled steel exterior panels designed to match Supreme Air Fume Hoods.
- Designed and tested using ASHRAE 110-1995, BS 7258, and DIN 12 924 standards.

Supreme Air Auxiliary Air Chambers H01

Specifications:

Supreme Air Auxiliary Air Chambers may be added to the top of any Open By-Pass Supreme Air Fume Hood to convert them to Auxiliary Air fume hoods. Adding the auxiliary air chamber makes it possible for the fume hood to operate on up to 70% auxiliary air, thus saving expensive conditioned room air from being exhausted. No modifications to the fume hood are required and the chamber comes complete with all necessary parts to make the conversion, except fan and duct work. The chambers are fabricated of cold rolled steel, phosphate coated with a baked chemical resistant, synthetic resin finish to match the fume hood.

Auxiliary Air Requirements (based on 70% of hood air requirements)

for Bench and Walk-In Fume Hoods

Overall Hood Length	Total CFM and Static Pressure					
	80 FPM	S.P.	100 FPM	S.P.	120 FPM	S.P.
4'-0" / 48"	460	0.15"	570	0.25"	690	0.35"
5'-0" / 60"	590	0.15"	740	0.25"	880	0.30"
6'-0" / 72"	730	0.15"	900	0.25"	1090	0.30"
8'-0" / 96"	990	0.15"	1240	0.25"	1490	0.30"
10'-0" / 120"	1270	0.15"	1580	0.25"	1900	0.30"
12'-0" / 144"	1540	0.15"	1920	0.25"	2300	0.30"

for Distillation Fume Hoods

Overall Hood Length	Total CFM and Static Pressure					
	80 FPM	S.P.	100 FPM	S.P.	120 FPM	S.P.
4'-0" / 48"	650	0.35"	810	0.50"	980	0.65"
5'-0" / 60"	850	0.35"	1060	0.50"	1270	0.60"
6'-0" / 72"	1040	0.35"	1300	0.50"	1570	0.60"
8'-0" / 96"	1430	0.35"	1790	0.50"	2140	0.60"

Auxiliary Air Chambers for Bench and Walk-In Fume Hoods

4'-0"

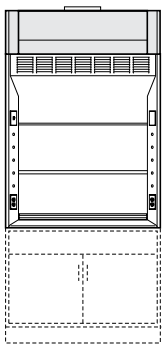

H01M134848N

5'-0"

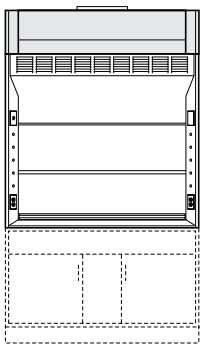

H01M134860N

6'-0"

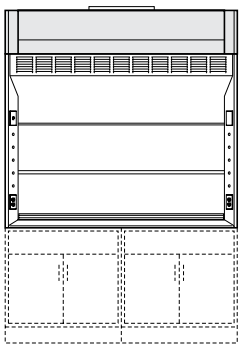

H01M134872N

8'-0"

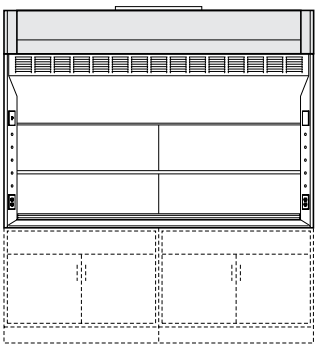

H01M134896N

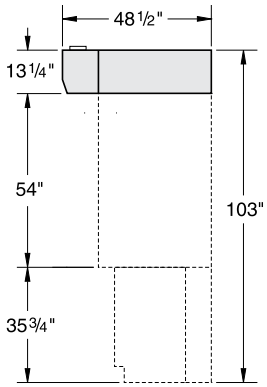

End View

Auxiliary Air Chambers for Bench and Walk-In Fume Hoods

10'-0"

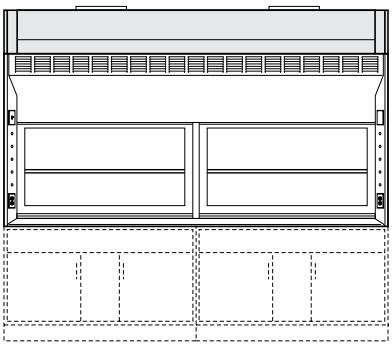

H01M134820N

12'-0"

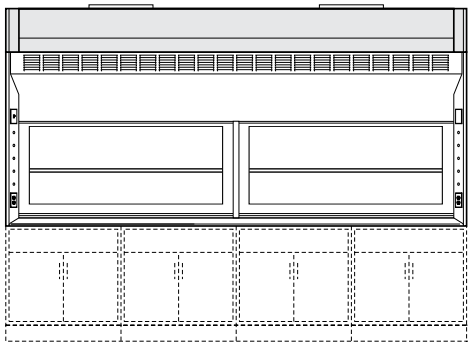

H01M134844N

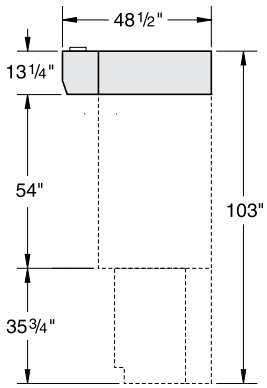

End View

KEWAUNEE

Supreme Air Fume Hood Option Availability

Options		H05	H07	H08	H09	H10	H20	H25	H30	H32	H34	H36	H50	H52	H70	HOP
Open By-Pass	–	A	NR	A	NR	A	A	Std	A	NR		A				
Restricted By-Pass	B	A	Std	A	Std	A	A		A	A	Std	A	Std	Std	Std	Std
Phenolic Resin	T	A	A	A	A	A			A	A	A	A	A	A	A	A
Kemglass Liner	G	A	A	A	A	A			A	A	A	A	A	A	A	A
Stainless Steel Liner	S	A	A	A	A	A	Std	Std	A	A	A	A	A	A	A	A
Auxiliary Air Chamber		OB		A		OB	OB	A	OB			OB				
Adjustable Baffle	A	A	A	A	A	A	A	A	A	A	A	A			A	A
Single Point Adjustable Baffle	C	A	A	A	A	A			A	A	A	A			A	A
Distillation Rack	D	A	A	A	A	A			A	A	A	A	A	A	A	A
Fire Extinguisher	E	A	A	A	A	A			A	A	A	A	A	A	A	A
Additional GFI Receptacles (2)	F	A	A			A	A	A	A	A	A	A			A	A
Front Load Fittings	G	A	A			A	Std	Std	A	A	A	A	A	A	A	A
Pre-Wired / UL Listed	H	A	A	A	A	A	A	A	A	A	A	A	A	A	A	A
Safety Shield	I	A		A		A	A	A								
Vapor Proof Light	K	A	A	A	A	A	A	Std	A	A	A	A	A	A	A	A
Explosion Proof Light	L	A	A	A	A	A	A	A	A	A	A	A	A	A	A	A
Air Alert 600 Alarm (at Top Right)	M	A	A	A	A	A	A	A	A	A	A	A			A	A
Stainless Steel Deflector Vane	O	A	A	A	A	A	A	A				A	A		A	
Stainless Steel Sash Handle	Q	A		A		A	A	A	A			A				
Additional GFI Receptacle (Right)	R	A	A			A	A	A	A	A	A	A			A	A
Additional GFI Receptacle (Left)	S	A	A			A	A	A	A	A	A	A			A	A
Sight-Tight Chevron Grill	T	OB	OB	OB	OB	OB	OB	A	OB	OB	A	OB				
Vision Panel	V	A	A	A	A	A	A	A	A	A	A	A			A	Std
Air Alert 300 Alarm (location 1)	W	A†	A	A†	Std	A†	A†	A†	A†	A	A	A†			A	A
Air Alert 300 Alarm (location 2)	Z	A†	A	A†	A	A†	A†	A†	A†	A	A	A†			A	A
Frameless Tempered Glass Sash	1	A		A			A	A	A[8]			A[8]			A	
Framed Safety Glass Sash	2	A	Std*	A	Std*	Std	A	A	A	Std*	Std	A			A	Std*
Framed Tempered Glass Sash	3	A	A*	A	A*	A	A	A	A	A*	A	A	A	A	A	A*
St. Steel Safety Glass Sash	4	A	A*	A	A*	A	A	A	A	A*	A	A			A	A*
St. Steel Tempered Glass Sash	5	A	A*	A	A*	A	A	A	A	A*	A	A			A	A*
Tissue Screen	6	A	A	A	A	A	A	A	A	A	A	A	A	A	A	A
Stainless Steel Duct Collar	7	A	A	A	A	A	Std	Std	A	A	A	A	A	A	A	A
Gravity Sash Stop	8	A	A	Std	Std	A	A	A	A	A		A				A
Work Shelf Supports	9								A	A	A	A		A		

A = Option is available.
Std = Option is standard.
NR = Option is available, but Not Recommended.
OB = Option is available on Open By-Pass models only.

A[8] = 8 foot Walk-In available with framed sash only.
* = Combination sash available in narrow frame only.
† = Not recommended for use with Auxiliary Air.

Supreme Air Fume Hood Options

Adjustable Baffles – Option A

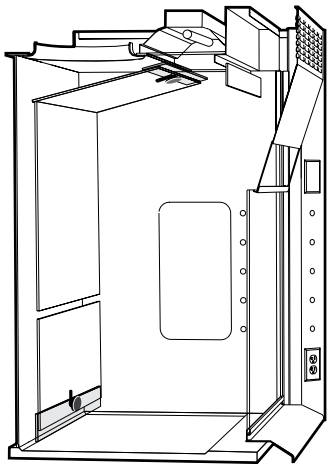

Internally adjustable baffles consist of movable baffle strips which can be adjusted my means of two slots and two threaded knobs. By sliding the strips up or down, the operator can adjust the relative size of the top and bottom slots. The middle slot in the baffle remains fixed.

Single Point Adjustable Baffles – Option C

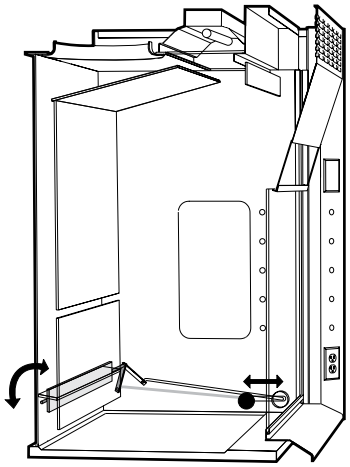

Single point adjustable baffles employ a pivoting baffle strip with an an articulating arm, a linkage rod, and a thread knob. By sliding the knob which rides in a slot in the lining near the front of the hood, the baffle strip is rotated to provide varying degrees of blockage to the bottom slot. This adjustment can be done without disturbing the apparatus within the hood.

Alternate Lighting

Option K
Vapor Proof
Incandescent Light

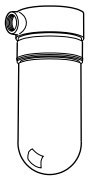

0750-0S *(150 watt)*

(Type A21, 150W, E26 base. Bulb not included)

Option L
Explosion Proof
LED Light

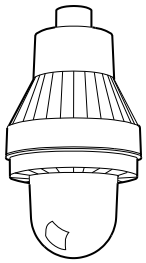

0753-00

(Built-in LED Bulb included)

Meets NEC Classifications:
Class 1, Division 1 & 2, Group C & D
Class 2, Division 1 & 2, Group E, F, & G
Class 3

KEWAUNEE

Supreme Air Fume Hood Options

Distillation Racks – Option D

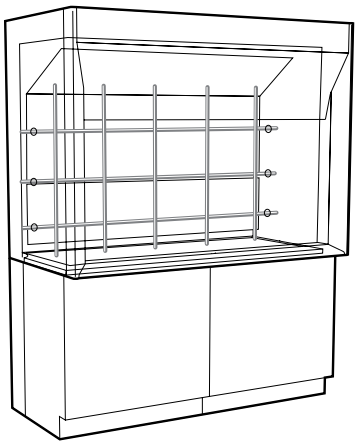

Supreme Air Fume Hoods may be furnished with a lattice style distillation rack. The rack consists of vertical and horizontal ½" diameter Duralumin rods. The rods are fastened with rod clamps to form a lattice of approximate 12" squares. Bench hoods have three horizontal rods, while walk-in and distillation hoods have six.

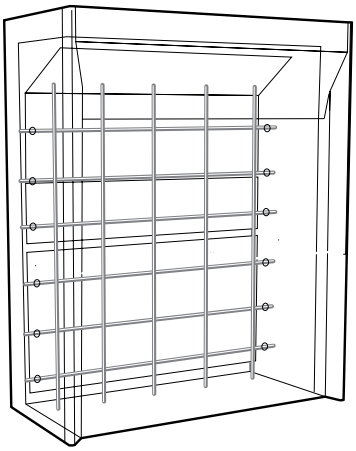

Fire Extinguisher – Option E

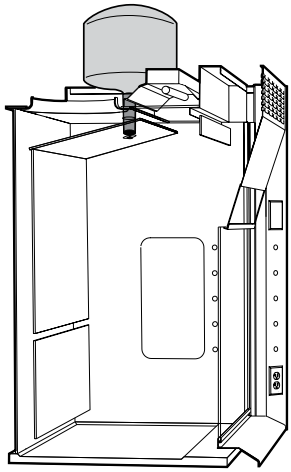

Supreme Air Fume Hoods may be fitted with a Fire Extinguisher System to control runaway experiments and the hazards of fire. At the heart of the system are multiple ABC dry chemical fire extinguisher, vertically mounted in the top of the fume hood for complete coverage. The extinguishers are fully self-contained and may be easily removed for maintenance and recharging.

Each fire extinguisher is equipped with a bright stainless steel, five pound capacity, canister; a pressure gauge for easy status checking, a patented valve and delivery nozzle, and a 165° F fusible link for automatic fire containment.

To ensure complete coverage, four foot, five foot, and six foot long fume hoods are furnished with two extinguishers mounted on opposite sides of the duct collar. Eight foot long hoods are furnished with three extinguishers, one at each end, and one in the middle.

Sliding Safety Shield – Option I

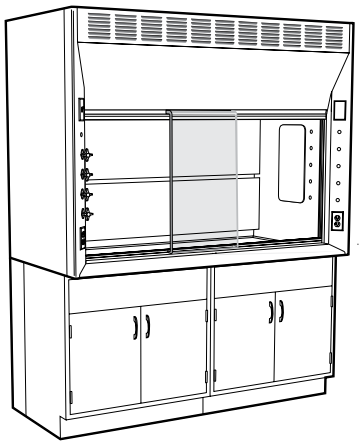

Supreme Air Bench Fume Hoods may be furnished with a polycarbonate safety shield designed to provide protection to fume hood users from small explosions, splattering of chemicals, breaking glass, etc. Designed to be used on Vertical Rising Sash Bench Hoods only, this 12" wide x ¼" thick shield slides the full length of the hood face opening on ball bearing rollers suspended from a track at the top of the sash opening, with a guide at the bottom to keep the shield from swinging. When the shield is not in use, it can be easily removed from the upper track and stored until it is needed again for safety purposes.

Supreme Air Fume Hood Options

Stainless Steel Lower Deflector Vane – Option O

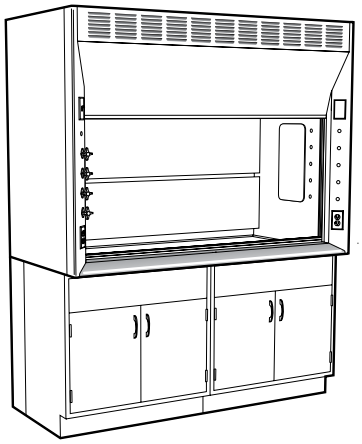

The standard painted cold rolled steel Lower Defector Vane on bench and distillation Supreme Air fume hoods may be optionally replaced with stainless steel. Stainless steel offers improved scratch and abrasion resistance.

Fabricated of 12 gauge, type 304 stainless steel, the deflector vane is furnished with a No. 4 finish.

Stainless Steel Sash Handle – Option Q

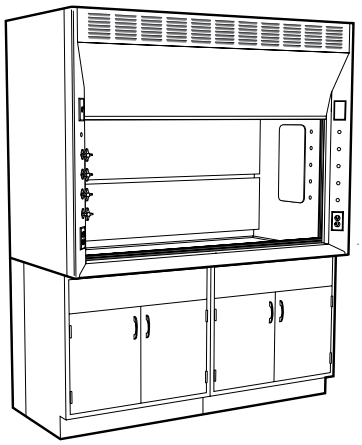

The standard painted aluminum sash handle may be replaced with a type 304 stainless steel sash handle.

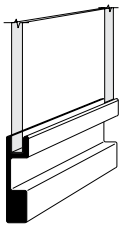

Sash Handle Profile

Sash Frame and Glass Options

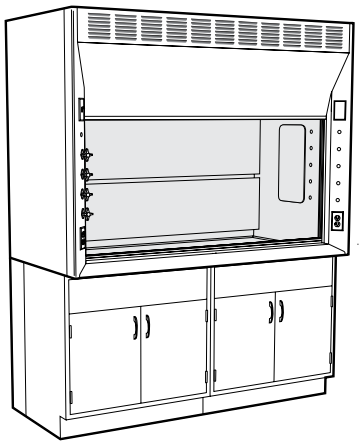

Standard Supreme Air fume hoods are fitted with frameless sashes of ¼" laminated safety glass. Optionally, as the chart below indicates, these hoods may be furnished with framed sashes of either painted cold rolled steel or stainless steel. In addition, all sashes may be fitted with ¼" tempered glass instead of laminated safety glass.

Option	Sash Frame	Sash Glass
Standard	Frameless	Laminated Safety
Option 1	Frameless	Tempered
Option 2 *	Painted CRS	Laminated Safety
Option 3	Painted CRS	Tempered
Option 4	Stainless Steel	Laminated Safety
Option 5	Stainless Steel	Tempered

* Painted CRS sash frames are standard on:
H07, H09, H10, H32, H34, H50, H52, and HOP hoods

KEWAUNEE

Supreme Air Fume Hood Options

Sight-Tight Chevron Grille – Option T

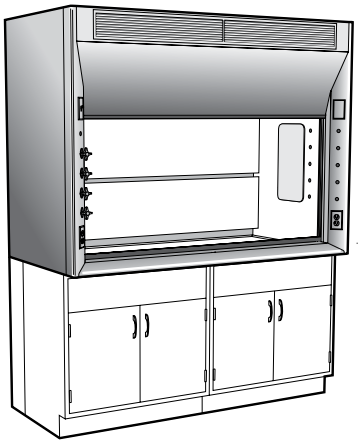

The standard louvered top front panel on all Open By-Pass Supreme Air Fume Hoods may be replaced with an optional top front panel that contains a Sight-Tight Chevron Grille. The unique chevron shape of the grille vanes adds protection to the user from flying debris from within the hood.

Fabricated of aluminum, the Sight-Tight Grille is finished to match the hood. The Sight-Tight Grille option may be used in conjunction with the Vision Panel option.

Vision Panel – Option V

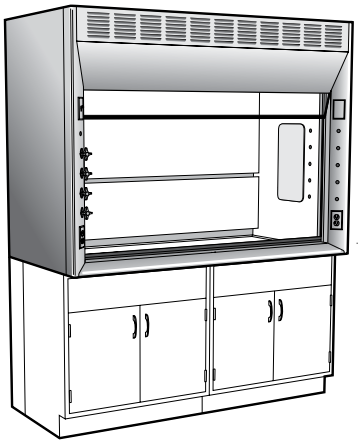

The standard louvered top front panel on all Supreme Air Fume Hoods may be replaced with an optional top front panel that contains a transparent Vision Panel. The tinted acrylic Vision Panel offers added convenience by allowing the hood operator a clear view to the entire interior of the hood without bending down or placing their head inside the hood. The Vision Panel option may be used in conjunction with the Sight-Tight Grille option.

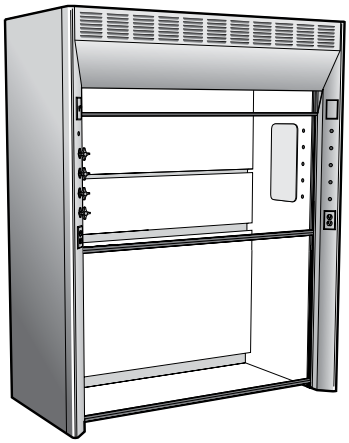

Tissue Screen – Option 6

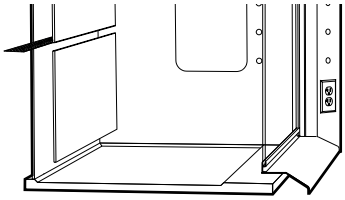

The optional Tissue Screen protects the back baffle area just above the safety slot on both bench and walk-in fume hoods. Fabricated of perforated stainless steel, the screen blocks tissue and other light material from being swept up behind the upper baffle and into the exhaust system.

Stainless Collar – Option 7

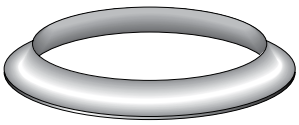

A Stainless Steel Duct Collar may be specified on any Supreme Air fume hood instead of the standard polyethylene collar.
(Type 316 Stainless Steel)

Note: H20 Isotope Bench Hoods, H25 Perchloric Acid Bench Hoods, and all other stainless steel lined hoods are furnished standard with stainless steel collars.

Gravity Sash Stop – Option 8

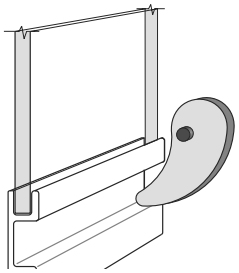

As an energy conservation or safety measure, a Sash Stop may be added to any hood with a vertically rising sash. It may be mounted at any distance above the lower deflector vane to keep the sash from rising past that point. When needed the stop may be pivoted out of the way. Contact your Kewaunee representative for CFM data at various sized openings.

Supreme Air Fume Hood Worksurfaces

Worktop for Bench Hoods and Distillation Hoods

Supreme Air Bench Hoods and Distillation Hoods require a Worktop that may be either Kemresin or Stainless Steel. Only Isotope and Perchloric Acid hoods have the Worktop as part of their standard part number. Worktops for all other bench hoods must be specified separately. Worktops are dished ⅜" to retain spillage and incorporate a 6" wide safety rim at the front. They may include cutouts for cupsinks, sinks, steam baths, hot plates fixtures, vent pipes or other apparatus as specified. Kemresin Tops are furnished with a cupsink cutout only; Stainless Steel Tops include an integrally welded cupsink as listed below.

Worktops for **H05 – H07** **H10 – H70** Bench **H-36** Distillation Fume Hoods	Overall Hood Length	Kemresin	Type 304 Stainless Steel	Type 316 Stainless Steel
	4'-0" / 48"	**HWT1R013648**	**HWT1S013648**	**HWT1L013648**
	5'-0" / 60"	**HWT1R013660**	**HWT1S013660**	**HWT1L013660**
	6'-0" / 72"	**HWT1R013672**	**HWT1S013672**	**HWT1L013672**
	8'-0" / 96"	**HWT1R013696**	**HWT1S013696**	**HWT1L013696**
	10'-0" / 120"	**HWT1R013620**	**HWT1S013620**	**HWT1L013620**
	12'-0" / 144"	**HWT1R013644**	**HWT1S013644**	**HWT1L013644**
	Standard Cupsink Cutout Location	0491 (3" x 6") Cupsink Cutout Left Rear	0950 (5" Dia.) St. Steel Cupsink Left Rear	0951 (5" Dia.) St. Steel Cupsink Left Rear

Worktops for **H08 – H09** ADA Bench Fume Hoods	Overall Hood Length	Kemresin	Type 304 Stainless Steel	Type 316 Stainless Steel
	4'-0" / 48"	**HWT3R013648**	**HWT3S013648**	**HWT3L013648**
	5'-0" / 60"	**HWT3R013660**	**HWT3S013660**	**HWT3L013660**
	6'-0" / 72"	**HWT3R013672**	**HWT3S013672**	**HWT3L013672**
	Standard Cupsink Cutout Location	0491 (3" x 6") Cupsink Cutout Left Front	0950 (5" Dia.) St. Steel Cupsink Left Front	0950 (5" Dia.) St. Steel Cupsink Left Front

Worktops for **H50** Dynamic Barrier Bench Fume Hoods	Overall Hood Length	Kemresin	Type 304 Stainless Steel	Type 316 Stainless Steel
	4'-0" / 48"	**HWT2R013648**	**HWT2S013648**	**HWT2L013648**
	5'-0" / 60"	**HWT2R013660**	**HWT2S013660**	**HWT2L013660**
	6'-0" / 72"	**HWT2R013672**	**HWT2S013672**	**HWT2L013672**
	8'-0" / 96"	**HWT2R013696**	**HWT2S013696**	**HWT2L013696**
	Standard Cupsink Cutout Location	0491 (3" x 6") Cupsink Cutout Left Rear	0950 (5" Dia.) St. Steel Cupsink Left Rear	0950 (5" Dia.) St. Steel Cupsink Left Rear

Worktops for **HOPEC** Style Bench Fume Hoods	Overall Hood Length	Kemresin	Type 304 Stainless Steel	Type 316 Stainless Steel
	4'-0" / 48"	**HWT4R013648**	**HWT4S013648**	**HWT4L013648**
	5'-0" / 60"	**HWT4R013660**	**HWT4S013660**	**HWT4L013660**
	6'-0" / 72"	**HWT4R013672**	**HWT4S013672**	**HWT4L013672**
	8'-0" / 96"	**HWT4R013696**	**HWT4S013696**	**HWT4L013696**
	Standard Cupsink Cutout Location	0491 (3" x 6") Cupsink Cutout Left Rear	0950 (5" Dia.) St. Steel Cupsink Left Rear	0950 (5" Dia.) St. Steel Cupsink Left Rear

Kemresin Color Option

Kemresin Worksurfaces may be specified in one of four colors:

BK = Black
GR = Grey
PT = Putty
SL = Slate

Place the letter code at the end of the part number to specify the color.

Example: HWT1R013648-BK for Black

If no color is specified, worksurface will be furnished in Black

KEWAUNEE

Supreme Air Fume Hood Worksurfaces

Optional Work Floor for Walk-In Hoods

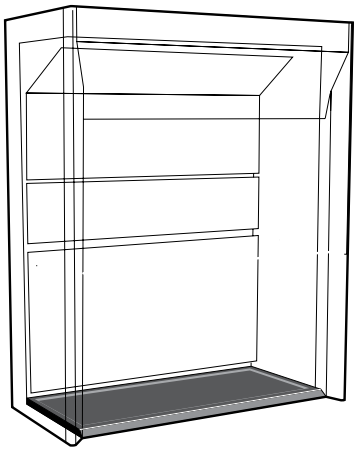

Supreme Air Walk-In Fume Hoods may be fitted with an Optional Work Floor for added protection to the laboratory floor. Available in either Kemresin or stainless steel, the Work Floor is fabricated with a beveled front safety rim to retain spills and facilitate rolling carts into the hood.

Work Floors may include cutouts for drain outlets or other apparatus when specified.

Worktops for **H30 – H32 & H52** Walk-in Fume Hoods with Vertical Rising Sash	Overall Hood Length	Kemresin	Type 304 Stainless Steel
	4'-0" / 48"	**HWF1R013648**	**HWF1S013648**
	5'-0" / 60"	**HWF1R013660**	**HWF1S013660**
	6'-0" / 72"	**HWF1R013672**	**HWF1S013672**
	8'-0" / 96"	**HWF1R013696**	**HWF1S013696**
	Standard Cutout/Cupsink Location	None	None

Worktops for **H34** Walk-in Fume Hoods with Horizontal Sash	Overall Hood Length	Kemresin	Type 304 Stainless Steel
	6'-0" / 72"	**HWF2R012672**	**HWF2S013672**
	8'-0" / 96"	**HWF2R012696**	**HWF2S013696**
	10'-0" / 120"	**HWF2R012620**	**HWF2S013620**
	Standard Cutout/Cupsink Location	None	None

Optional Removable Work Shelf for Walk-In and Distillation Hoods

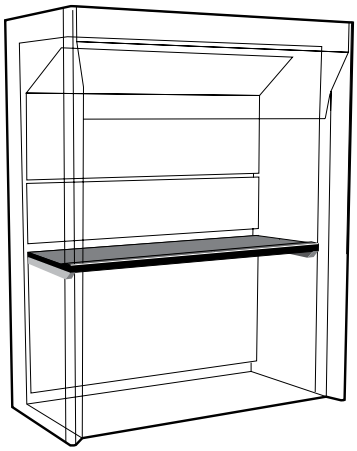

Supreme Air Walk-In and Distillation Fume Hoods may be fitted with a removable Work Shelf mounted at 36 5/16" above the floor. Available in either Kemresin or stainless steel, the Work Shelf is provided with a front safety rim to minimize spills.

Work Shelves are available either 18" or 24" deep. 18" deep shelves may be used in conjuction with distillation racks, or when clearance is required at the front of the hood.

Work Shelves may include cutouts when specified but should not include cupsinks or drains, as the shelf is removable.

Fume hoods with Removable Work Shelves must be specified with Option 9 to include the shelf support.

18" Deep Optional Work Shelf for Walk-in & Distillation Fume Hoods	Overall Hood Length	Kemresin	Type 304 Stainless Steel
	4'-0" / 48"	**HWS1R011848**	**HWS1S011848**
	5'-0" / 60"	**HWS1R011860**	**HWS1S011860**
	6'-0" / 72"	**HWS1R011872**	**HWS1S011872**
	Standard Cutout/Cupsink Location	None	None

24" Deep Optional Work Shelf for Walk-in & Distillation Fume Hoods	Overall Hood Length	Kemresin	Type 304 Stainless Steel
	4'-0" / 48"	**HWS1R012448**	**HWS1S012448**
	5'-0" / 60"	**HWS1R012460**	**HWS1S012460**
	6'-0" / 72"	**HWS1R012472**	**HWS1S012472**
	Standard Cutout/Cupsink Location	None	None

Contact Factory for Work Shelves for Hoods over 72" long.

Kemresin Color Option

Kemresin Worksurfaces may be specified in one of four colors:

BK = Black
GR = Grey
PT = Putty
SL = Slate

Place the letter code at the end of the part number to specify the color.

Example: HWS1R012448-BK for Black

If no color is specified, worksurface will be furnished in Black

Hood Enclosures, Trim & Finished Backs

Fume Hood Ceiling Enclosures

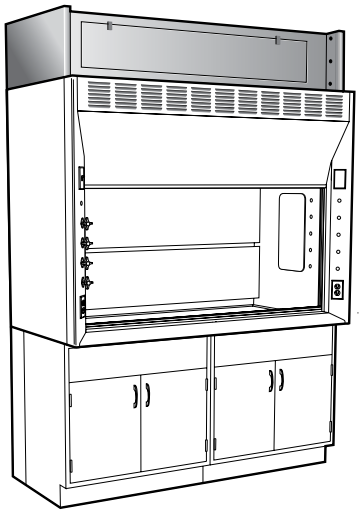

Fume Hood Ceiling Enclosures are designed to fill the space between the top of the hood and the ceiling to provide a finished appearance. They are available in three sizes: 9¼" High for ceilings 8 foot and lower, and 13" or 21¼" high, for ceilings up to 9 feet high. The 13" and 21¼" enclosures are provided with an Access Panel in the front for easy access to the light fixture. The front panel is mounted behind the sash to allow the hood by-pass to remain open to the room.

Supreme Air Enclosures

9¼" High w/o Access	13" High w/Access	21¼" High w/Access
HCE1M093648	**HCE1M133648**	**HCE1M213648**
HCE1M093660	**HCE1M133660**	**HCE1M213660**
HCE1M093672	**HCE1M133672**	**HCE1M213672**
HCE1M093696	**HCE1M133696**	**HCE1M213696**
HCE1M093620	**HCE1M133620**	**HCE1M213620**
HCE1M093644	**HCE1M133644**	**HCE1M213644**

Supreme Air Enclosure Finished Backs

9¼" High	13" High	21¼" High
HCE2M090148	**HCE2M130148**	**HCE2M210148**
HCE2M090160	**HCE2M130160**	**HCE2M210160**
HCE2M090172	**HCE2M130172**	**HCE2M210172**
HCE2M090196	**HCE2M130196**	**HCE2M210196**

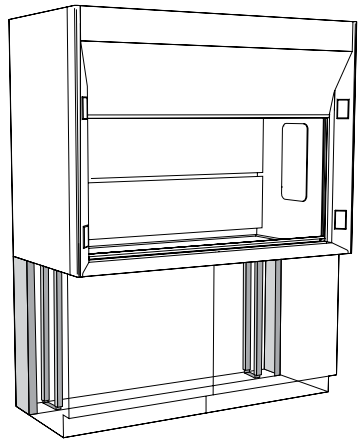

Base Cabinet Rear Filler

To close opening between wall and rear of fume hood base cabinet.

Steel Rear Filler	Height
BRSC350008N	35¾"
BRSC320008N	33"

Wood Rear Filler	
X40W360108N-00_0	36"

Kemstruts

Floor mounted support to provide stability to rear overhang of fume hood tops and provides mounting struts for plumbing and electrical service lines. Adjustable in height and 7⅞" deep to fit 8" deep plumbing chase.

Kemstrut	Height
K12M350108A	36"
K12M320108A	33"

Fume Hood Finished Backs

Fume Hood Finished Backs are designed to enclose the back of the fume hood when it is exposed to view.

Supreme Air Bench Fume Hood 54" High	Supreme Air Walk-In Fume Hood 90" High	Dynamic Barrier Bench Fume Hood 54" High	Dynamic Barrier Walk-In Fume Hood 90" High	
HFB1M540148	**HFB1M900148**	**HFB2M540148**	**HFB2M900148**	48" L
HFB1M540160	**HFB1M900160**	**HFB2M540160**	**HFB2M900160**	60" L
HFB1M540172	**HFB1M900172**	**HFB2M540172**	**HFB2M900172**	72" L
HFB1M540196	**HFB1M900196**	**HFB2M540196**	**HFB2M900196**	96" L

KEWAUNEE

Pre-Wired and Pre-Piped

Specifications:

Pre-Wired — Supreme Air Fume Hoods may be factory pre-wired using flexible metallic conduit to a single junction box at the top of the hood for one-point field connection. Standard pre-wired configurations are UL listed. Contact Kewaunee Engineering for non-standard electrical requirements.

Option H must be selected for fume hoods to be UL 61010A-1 listed.

Pre-Piped —The fume hoods may be factory pre-piped when pre-piped fittings are selected. Piping is routed to the rear of the hood on the side where fittings are installed; hoods with fittings on both ends have two connection points. Piping may be routed to the top or bottom of the hood, as specified.

Note: Standard joints are soldered; brazed joints are available upon special request.

Standard ⅜" Piping Materials

Water — Hard Drawn Type L Copper
Gas — Black Steel
Vacuum — Hard Drawn Type L Copper
Air — Hard Drawn Type L Copper
DI Water — PVC
Other — Hard Drawn Type L Copper
(Copper connections made with lead free solder, black steel connections are threaded)

Typical Walk-In Hood

(Piped to top of hood)

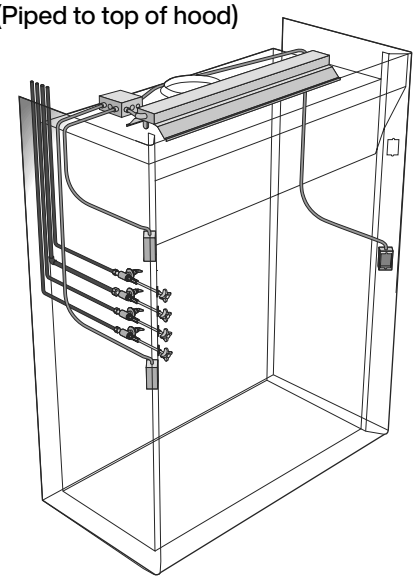

Typical Bench Hood

(Piped to top of hood)

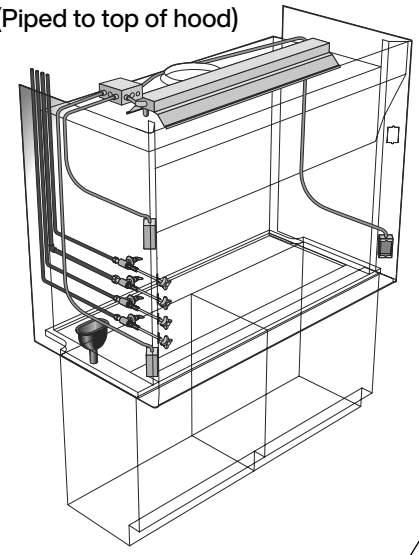

Typical Fume Hood with Plumbing & Wiring Connections

(Piped to bottom of hood)

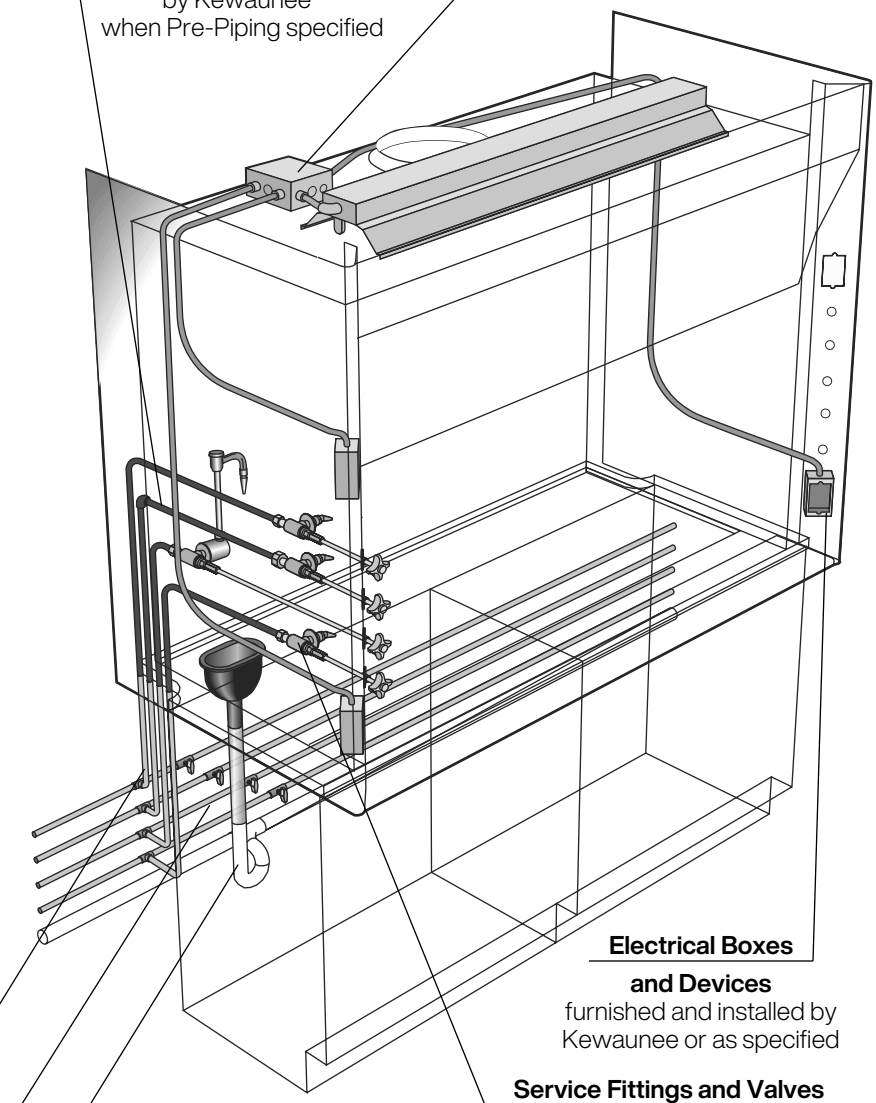

Sinks and Cupsinks

Poly Cupsinks

SCP0499B Black Poly
SCP0499G Grey Poly
SCP0499S Slate Poly
Complete with integral strainer, 12" horizontal tail-piece, and 90° elbow with 1½" IPS male straight thread outlet. Cupsink inside dimension, 5½" x 3½". (Overall height is 7", tailpiece and elbow not illustrated)

0491-BP Black Poly
0491-GP Grey Poly
Complete with removable strainer. 6"x 3" inside dimension. 1½" IPS male straight thread outlet. (Overall height is 8½")

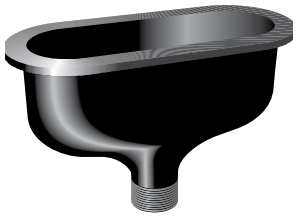

0492-BP Black Poly
0492-GP Grey Poly
Complete with removable strainer. 9"x 3" inside dimension. 1½" IPS male straight thread outlet. (Overall height is 7")

Side Mounted Cupsink

0476-BP Black Poly
0476-GP Grey Poly
Molded of black polyolefin resins. Complete with 90° union elbow. Designed to be mounted in a vertical panel not over ¼" thick. 6" x 3" inside dimension. 1½" IPS male straight thread outlet.

Epoxy Cupsinks

SCR0490N-BE Black Epoxy
SCR0490N-GE Grey Epoxy
SCR0490N-PE Putty Epoxy
SCR0490N-SE Slate Epoxy
Complete with removable strainer. 6"x 3" inside dimension. 1½" IPS male straight thread outlet. (Overall height is 7½")

Rectangular Epoxy Cupsinks

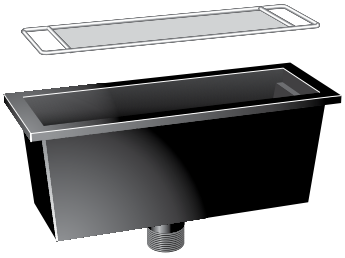

SCR0493N-BE Black Epoxy
SCR0493N-GE Grey Epoxy
SCR0493N-PE Putty Epoxy
SCR0493N-SE Slate Epoxy
Complete with gasket and removable type 316 stainless steel wire screen. 13⅜" x 4⅛" x 5¼" I.D. 1½" IPS male straight thread outlet. (Overall height is 8")

Stainless Cupsinks

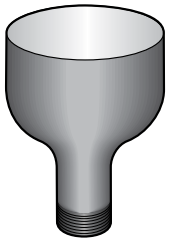

0950-00 Stainless Steel
Made of type 304 stainless steel and has integral cross bars. 5" I.D. 1½" IPS male straight thread outlet. Designed to be welded into stainless steel tops.

0951-00 Stainless Steel
Same as 0950-00 except made of type 316 stainless steel.

Epoxy Resin Tub Sinks

Tub sinks are one piece molded of modified epoxy resins and cured at high temperatures for maximum chemical, impact, and thermal shock resistance. All inside corners are coved and the bottom is pitched to the drain cutout. All dimensions are inside.

Cat. No.	L	H	W
SUR1000N	14"	6"	10"
SUR1001N	16"	7"	8"
SUR1003N	18"	11 13/16"	15"
SUR1005N	25"	10"	15"
SUR1006N	18"	8"	15"
SUR1007N	24"	8"	16"
SUR1011N	18"	6"	6½"
SUR1021N	16"	7½"	16"

Sink Outlet

0482-BP Black Poly
0482-GP Grey Poly
Complete with locknut. 1½" IPS male straight thread outlet. For use with epoxy resin tub sinks and troughs.

Sink Overflow

0494BP-04 4" High
0494BP-06 6" High
0494BP-08 8" High
0494BP-10 10" High
Sink Overflows are designed to be used with **0482-BP** sink outlets. 1½" diameter.

KEWAUNEE

Fume Hood Service Fittings

Specifications:

All Supreme Air Fume Hood Fittings include brass valve with replaceable seat, Nylon color-coded panel flange with angle serrated hose connector, or gooseneck with sepia bronze finish, plastic color-coded four arm handle, and tank nipple, locknut, and washer. Standard fittings also include remote control rod assembly and black plastic angle flange. They may be used on either side of the hood in any location. (They can not be used on Isotope or Perchloric Acid hoods.) Gooseneck fittings are available with either long or short rod handles for either front or rear fixture locations.

Fitting Part Number Options:

Part Numbers shown below indicate the fittings will be installed in the hood at the factory. If the fittings are to be Pre-Piped, the **-I** at the end of the part number must be replaced by **-P**. If the fittings need to be shipped loose, omit the **-I** from the part number.

Fittings for services not listed may be specified by replacing the service indicator letter at the end of the part number with a **0** and specifying the service required.

Service Fitting Color Codes:

Air ..... Orange
Cold Water ..... Dark Green
Distilled Water ..... White
Gas ..... Dark Blue
Hot Water ..... Red
Hydrogen ..... Pink
Nitrogen ..... Brown
Oxygen ..... Light Green
Special Gases ..... Light Blue
Steam ..... Black
Vacuum ..... Yellow

Remote Control Needle Valve Fittings

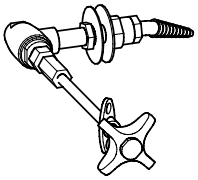

Panel Flange with Angle Serrated Hose Connector

W-0860-3A-I	Air
W-0860-3G-I	Gas
W-0860-3N-I	Nitrogen
W-0860-3V-I	Vacuum
W-0861-3S-I *	Steam
W-0861-3W-I	Cold Water
W-0862-3D-I	Distilled Water

2½" Long Handle
* Sepia bronze flange and connector

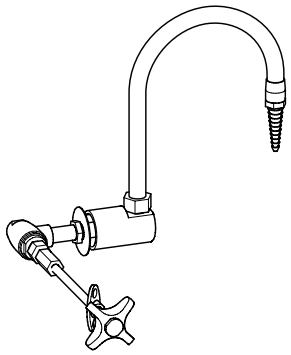

Water Valve Gooseneck

W-0864-3W-I	27¾" Long Handle
W-0864-3WA-I	12½" Long Handle

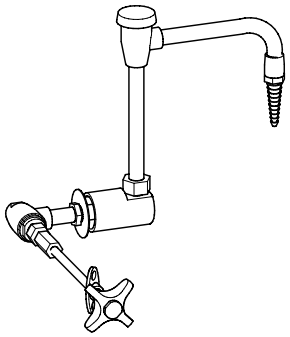

Water Valve Gooseneck with Vacuum Breaker

W-0864-3WV-I	27¾" Long Handle
W-0864-3WVA-I	12½" Long Handle

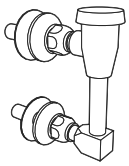

Vacuum Breaker Assembly
for elevated mounting in top front panel of fume hood

H0112-P Assembly
⅜" I.P.S inlet and outlet, includes brass nipples, locknuts, and washers.

Vacuum Breaker (not pictured)
for elevated mounting in side wall of fume hood

H0539-P Vacuum Breaker only
⅜" I.P.S inlet and outlet

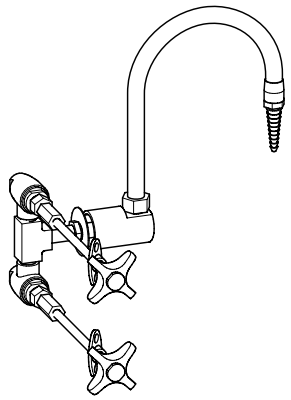

Mixing Valve Gooseneck

W-0868-3W-I	27¾" Long Handle
W-0868-3WA-I	12½" Long Handle

(occupies two fitting holes)

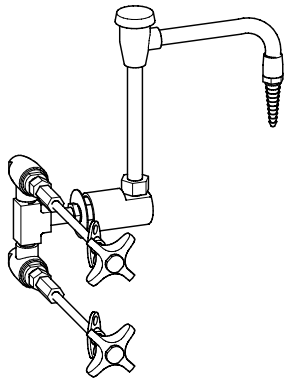

Mixing Valve Gooseneck with Vacuum Breaker

W-0868-3WV-I	27¾" Long Handle
W-0868-3WVA-I	12½" Long Handle

(occupies two fitting holes)

Fume Hood Service Fittings

Specifications:

Supreme Air Fume Hood Ball Valve Fittings include brass valve, Nylon color-coded panel flange with angle serrated hose connector, or gooseneck with sepia bronze finish, chrome-plated lever handle with on-off label, and tank nipple, locknut, and washer. Fittings also include remote control rod assembly and black plastic angle flange. They must be ordered for either right or left hand mounting. (They can not be used on Isotope or Perchloric Acid hoods.) Gooseneck fittings are available with either long or short rod handles for either front or rear fixture locations.

Fitting Part Number Options:

Part Numbers shown below indicate the fittings will be installed in the hood at the factory. If the fittings are to be Pre-Piped, the **-I** at the end of the part number must be replaced by **-P**. If the fittings need to be shipped loose, omit the **-I** from the part number.

Fittings for services not listed may be specified by replacing the service indicator letter at the end of the part number with a **0** and specifying the service required.

Service Fitting Color Codes:

Air	Orange
Cold Water	Dark Green
Distilled Water	White
Gas	Dark Blue
Hot Water	Red
Hydrogen	Pink
Nitrogen	Brown
Oxygen	Light Green
Special Gases	Light Blue
Steam	Black
Vacuum	Yellow

Remote Control Ball Valve Fittings — Left Hand Mounting for ADA Hoods Only

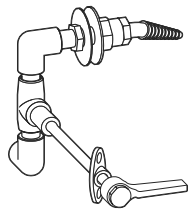

Panel Flange with Angle Serrated Hose Connector

W-4285-L-3A-I	Air
W-4285-L-3G-I	Gas
W-4285-L-3N-I	Nitrogen
W-4285-L-3V-I	Vacuum
W-4285-L-3W-I	Cold Water

12½" Long Handle

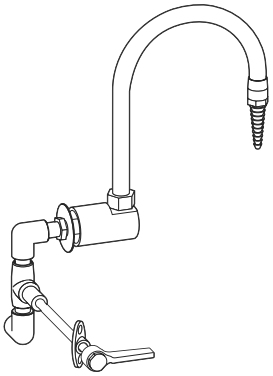

Water Valve Gooseneck

W-4285-L-3GW-I	27¾" L. Handle
W-4285-L-3GWA-I	12½" L. Handle

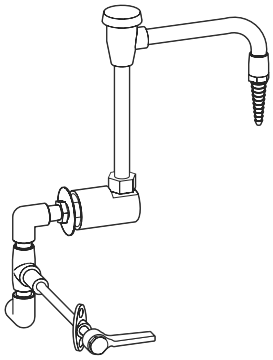

Water Valve Gooseneck with Vacuum Breaker

W-4285-L-3GVW-I	27¾" L. Handle
W-4285-L-3GVWA-I	12½" L. Handle

Remote Control Ball Valve Fittings — Right Hand Mounting for ADA Hoods Only

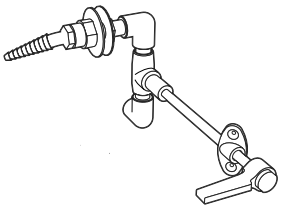

Panel Flange with Angle Serrated Hose Connector

W-4285-R-3A-I	Air
W-4285-R-3G-I	Gas
W-4285-R-3N-I	Nitrogen
W-4285-R-3V-I	Vacuum
W-4285-R-3W-I	Cold Water

12½" Long Handle

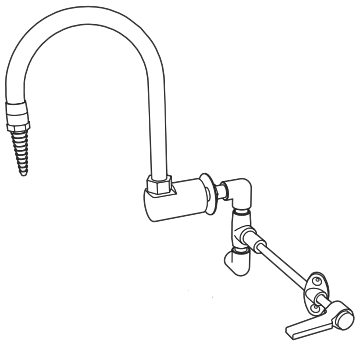

Water Valve Gooseneck

W-4285-R-3GW-I	27¾" L. Handle
W-4285-R-3GWA-I	12½" L. Handle

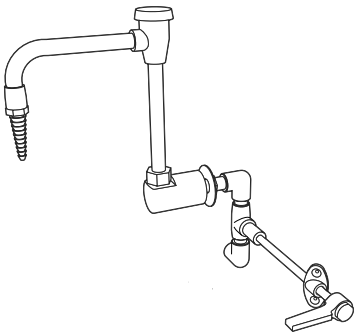

Water Valve Gooseneck with Vacuum Breaker

W-4285-R-3GVW-I	27¾" L. Handle
W-4285-R-3GVWA-I	12½" L. Handle

KEWAUNEE

Fume Hood Service Fittings

Specifications:

Front Load Remote Control Fittings are ideal for hoods where space is tight or high levels of maintenance are expected, as they can be accessed from outside the hood at the front. They are used standard on Isotope and Perchloric Acid hoods, but may be specified as an option on all hoods by adding **Option G.** They must be ordered for use on either the left or right side of the hood. Front Load Fittings include brass valve with replaceable seat, Nylon color-coded panel flange with angle serrated hose connector, or gooseneck with sepia bronze finish, plastic color-coded four arm handle, and tank nipple, locknut, and washer. They include the piping from the valve to the panel flange or gooseneck tank nipple when they are installed in the hood at the factory.

Fitting Part Number Options:

Part Numbers shown below indicate the fittings will be installed in the hood at the factory. If the fittings are to be Pre-Piped, the **-I** at the end of the part number must be replaced by **-P**. If the fittings need to be shipped loose, omit the **-I** from the part number.

Fittings for services not listed may be specified by replacing the service indicator letters at the end of the part number with a **0** and specifying the service required.

Front Load Remote Control Needle Valve Fittings — Left Hand Mounting

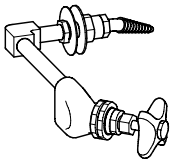

Nylon Panel Flange with Angle Hose Connector

W-0739-L-AIR-I	Air
W-0739-L-GAS-I	Gas
W-0739-L-NIT-I	Nitrogen
W-0739-L-VAC-I	Vacuum
W-0739-L-STM-I*	Steam
W-0739-L-CW-I	Cold Water
W-0739-L-FD-I	Distilled Water

* Sepia bronze flange and hose tip

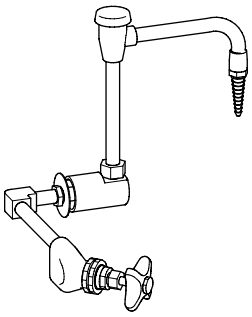

Water Valve Gooseneck

W-0740-L-CW-I	Cold Water
W-0740-L-CW-VB-I	Cold Water with Vacuum Breaker

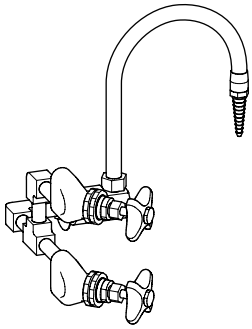

Mixing Valve Gooseneck

W-0740-L-HCW-I	H&C Water
W-0740-L-HCW-VB-I	H&C Water with Vacuum Breaker

Front Load Remote Control Needle Valve Fittings — Right Hand Mounting

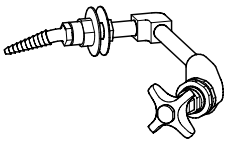

Nylon Panel Flange with Angle Hose Connector

W-0739-R-AIR-I	Air
W-0739-R-GAS-I	Gas
W-0739-R-NIT-I	Nitrogen
W-0739-R-VAC-I	Vacuum
W-0739-R-STM-I*	Steam
W-0739-R-CW-I	Cold Water
W-0739-R-FD-I	Distilled Water

* Sepia bronze flange and hose tip

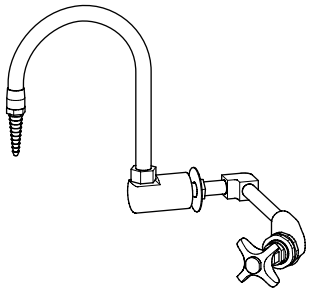

Water Valve Gooseneck

W-0740-R-CW-I	Cold Water
W-0740-R-CW-VB-I	Cold Water with Vacuum Breaker

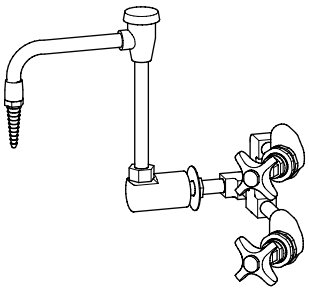

Mixing Valve Gooseneck

W-0740-R-HCW-I	H&C Water
W-0740-R-HCW-VB-I	H&C Water with Vacuum Breaker

Fume Hood Electrical Fixtures

Specifications:

All Electrical Fixtures except the fan switch are complete with 2½" deep steel electrical box, stainless steel face plate, and a 3-wire polarized grounding device, ivory in color. The fan switch is furnished with a specially sized 2" deep cast aluminum electrical box, stainless steel face plate, and motor rated starter switch, grey in color. Single gang receptacles and switches may be mounted in the fume hood vertical fascia. Double gang fittings and the Powerstat variable power controller must be mounted in the base cabinet below.

Fixture Part Number Options:

Part Numbers shown below indicate the fittings will be installed in the hood at the factory. If the fixtures are to be Pre-Wired, the **-I** at the end of the part number must be replaced by **-P** and the H-Option added to the hood.

If the fixtures need to be shipped loose, omit the **-I** from the part number.

Option H must be selected for fume hoods to be UL 61010A-1 listed.

Electrical Fixtures for mounting in Supreme Air Fume Hoods and Base Cabinets

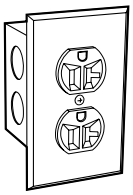

S581-1V Receptacle, 120 volt AC, specification grade, 20 amp, single duplex.

S582 Receptacle, 240 volt AC, specification grade, 20 amp, single duplex. (not pictured)

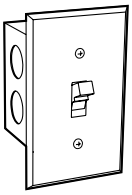

S655-1V Toggle Switch, single pole, 120/240 volt AC, 20 amp.

S593 Combination Toggle Switch/Receptacle, specification grade, single receptacle, 20 amp; switch, single pole, 20 amp. 120/240 VAC. (not pictured)

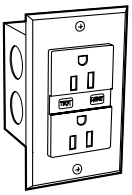

S656-1V *Receptacle, 120 Volt GFI, specification grade, 20 amp, ground fault protected, single duplex.

***Note:** One ground fault interrupter will protect all outlets on the same circuit.

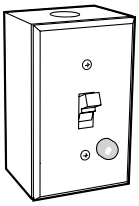

S695 Fan Switch, Motor rated starter switch with pilot light mounted in a single gang receptacle box complete with face plate, 120 volt pilot light, and double pole toggle switch with thermal overload protection for up to 1 HP single phase, 60 hertz 120/240 volt AC motors. (Thermal unit not provided)

Electrical Fixtures for mounting in Base Cabinets (will not fit in fume hood)

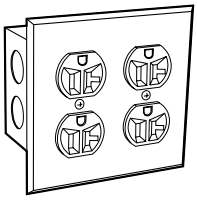

S581-6V Receptacle, 120 volt AC, specification grade, 20 amp, double duplex.

S582-6 *Receptacle, 240 volt AC, specification grade, 20 amp, double duplex. (not pictured)

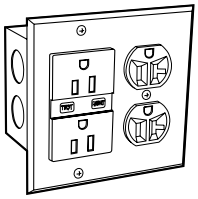

S657-6V *Receptacle, 120 volt GFI, specification grade, 20 amp, ground fault protected, double duplex.

***Note:** One ground fault interrupter will protect all outlets on the same circuit.

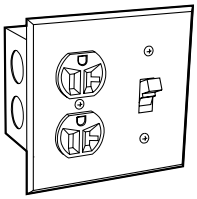

S589 Combination Toggle Switch/Receptacle, specification grade, receptacle, 20 amp, duplex; switch, single pole, 20 amp, 120/240 volt AC.

Variable Power Controllers

0767-00 Powerstat
Variable Power Controller

Ratings:

Input:	120 VAC 50/60 hertz single phase
Output:	0-120 VAC or 0-140 VAC
Max. Load:	10 amp.

Requires separate on/off control.

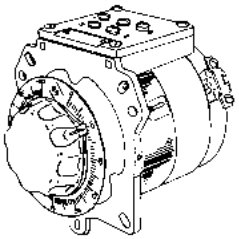

0767-03 Powermite
Solid State
Variable Power Controller

Ratings:

Input:	120 VAC
Output:	10-105 VAC
Max. Load:	600W, 5A

Includes controller, outlet and fuse mounted in a special jumbo handy box with stainless steel face plate. (Device is not UL Listed)

Fume Hood Alarms & Safety Devices

Air Alert 600 Fume Hood Monitor – Option M

Air Alert 600 consists of a thermistor sensor mounted on the fume hood interior wall and connected to fume hood containment cavity by a sensor port. A tube to the fume hood facia completes monitored air path. The monitor measures and records the fume hood face velocity and sounds an alarm when the airflow falls below safe levels. Green, amber, and red LEDs signal safe, marginal, and low face velocity conditions. Alarm and lights are augmented by a digital liquid crystal readout and a visual one-hour "Event Timeline" that records alarm occurrences and their length for a continually updated one-hour time interval. Mounted on the hood fascia, the control monitor also contains "enter", "+", and "-" buttons that offers the hood user a variety of alarm features. Alarm set points, metric or classical units, alarm delay intervals, nighttime setback, and muting options are all programmable. The Air Alert 600 operates on 9-30 volts AC or DC and comes complete with an adapter that can be plugged into any 120 VAC receptacle.

Contact Kewaunee factory when using Air Alert 600 on existing horizontal sash or combination sash fume hood.

Air Alert 300 Fume Hood Monitor – Option W and Option Z

Option W Air Alert 300 Airflow Alarm mounted on right-hand fascia below blank face plate replacing uppermost fixture hole.

Option Z Air Alert 300 Airflow Alarm mounted on right-hand fascia replacing blank face plate.

Air Alert 300 consists of a thermistor sensor mounted through the end wall of the hood, and a control monitor that gives both a visual and audible alarm. The alarm monitors the fume hood face velocity and sounds an alarm when the airflow falls below safe levels. A glowing green light signals when conditions are again safe. The control monitor, which is mounted on the hood fascia, also contains a test/reset button that allows the hood user to verify alarm readiness.

The Air Alert 300 operates on a 9 volt DC circuit and comes complete with an adapter that can be plugged into any 120 VAC receptacle.

Air Alert 300 not recommended for use with Auxiliary Air Fume Hoods

Inclined Manometer

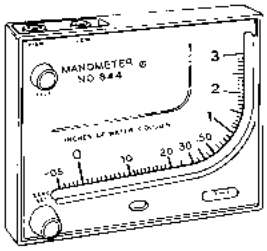

0844-00 Inclined Manometer
Housed in a molded plastic case, it is excellent for general purpose work, including measurement of air filter resistance, fume hood static pressures, and other pressure differentials.

Complete with 8 feet of flexible double column plastic tubing, two ⅛" N.P.T. connector fittings with nuts, two mounting screws, ¾ oz. bottle of indicating fluid and complete instructions.

Sash Label

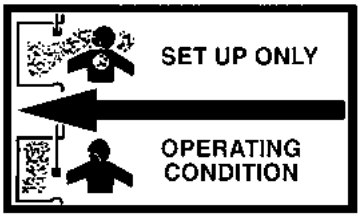

Half-Size
Actual Label 2½" x 4"

F-4803-00 Sash Open Safety Label
Designed to be used with Gravity Sash Stop, but may be used on any hood to indicate proper sash position for safe fume hood operation. Ideal for use when fans are sized for less than full sash open operation. Label is printed in black on clear vinyl.

Fume Hood Base Cabinets

DIMENSIONAL VIEW

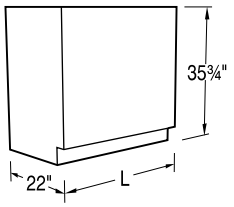

Specifications

Standing Height Steel and Wood Fume Hood Base Cabinets are 35" high and a nominal 22" deep. ADA Height Steel Fume Hood Base Cabinets are 32" high and 22" deep; ADA Height Wood Fume Hood Base Cabinets are 32½" high and nominal 22" deep. Lengths as shown.

See the **Research Collection Steel** and **Signature Series Wood Catalogs** for available styles and details.

Fume Hood Solvent Storage Cabinet Specifications

Solvent Storage Cabinets are specifically designed for the storage of flammable and combustible liquids. Both steel and wood cabinets meet UFC, OSHA and NFPA No. 30-1993 construction standards and are UL listed. All Solvent Storage Cabinets are labeled:

CAUTION FLAMMABLE – KEEP FIRE AWAY

in English, Spanish, and French.

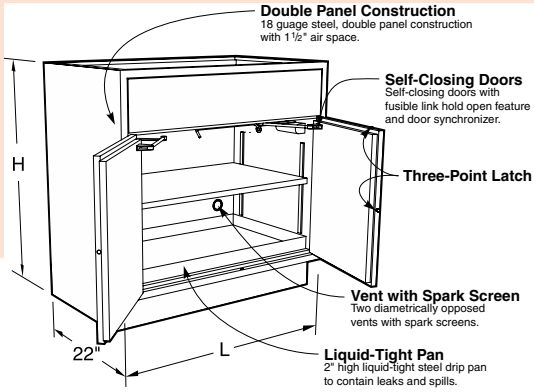

Fume Hood Acid Storage Cabinet Specifications

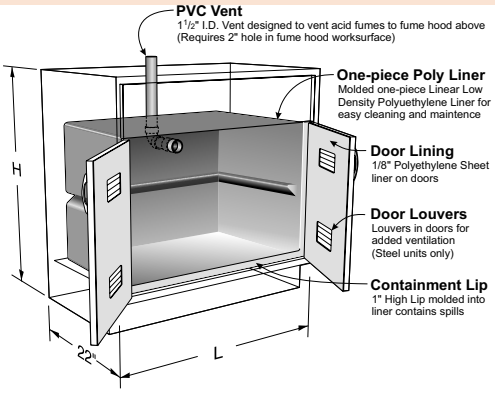

Acid Storage Fume Hood Base Cabinets are specifically designed for the storage of corrosive chemicals. They are available in either steel or wood. These cabinets are lined with a molded one piece linear low density polyethylene tub with coved corners and a 1" lip at the bottom front. The cabinet doors are lined with ⅛" sheet polyethylene and the doors are latched using a nylon roller catch.

Fume Hood Vacuum Pump Storage Cabinet Specifications

Vacuum Pump Storage Fume Hood Cabinets are designed without a bottom to allow vacuum pumps and other equipment to be rolled in or out of the cabinets. The interior is lined with 1" thick neoprene foam for sound deadening and easy cleaning. Each cabinet is furnished with a 120 VAC, 20 amp, duplex receptacle mounted on the inside cabinet back and a pilot lighted toggle switch mounted in the top front rail. (Wiring is not included.)

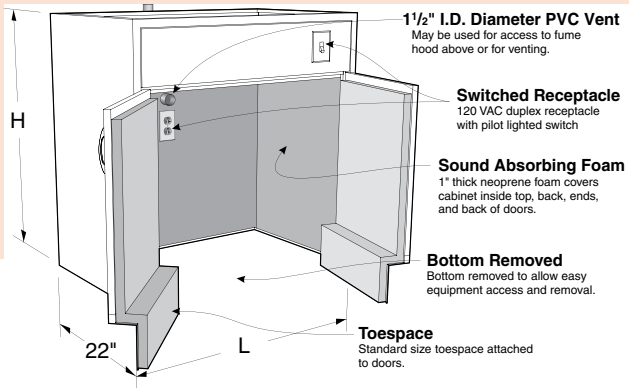

Fume Hood Filters & Canopy Hoods

Filter Housings and Filters

Filter Housing

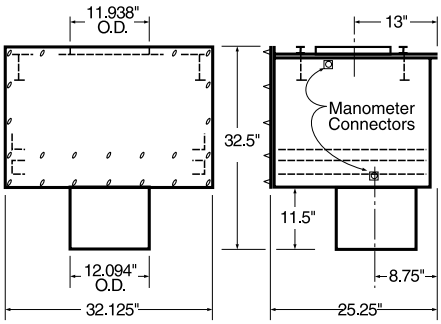

Filter Housings with Filters are designed to entrap and retain airborne contamination (usually radioactive) at their source or origin, rather than permitting them to circulate further through the exhaust duct and into the atmosphere. These filter housings are designed for use with one 2" thick pre-filter, and one 11½" thick high efficiency or charcoal filter. The housings are available in either painted, cold rolled steel or stainless steel and with an optional manometer connection.

Painted CRS	St. Steel	
FHFM222532N	**FHFS222532N**	Filter Housing
FHFM222532M	**FHFS222532M**	w/Manometer Connection

Filters must be ordered separately.

High Efficiency Filter

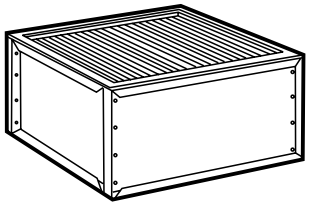

The high efficiency (HEPA absolute type) filter, has an efficiency of 99.7% for particles in the size range of 0.3 to 0.5 microns. The charcoal absorber filter, is designed for high efficiency removal of gaseous contaminants using activated charcoal. Not intended for radioactive or nuclear applications. Both filters as well as the pre-filter are standard replaceable filters.

0864-00	High Efficiency Filter	11½" x 24" x 30"
0855-00	Charcoal Absorber	11½" x 24" x 30"

When High Efficiency Filters are used, exhaust fans should be sized for 3" or more static pressure to allow for dirt loading of the filters.

Pre-Filter

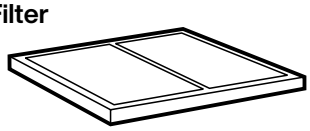

0863-00	Pre-Filter	2" x 24" x 30"

Canopy Hoods

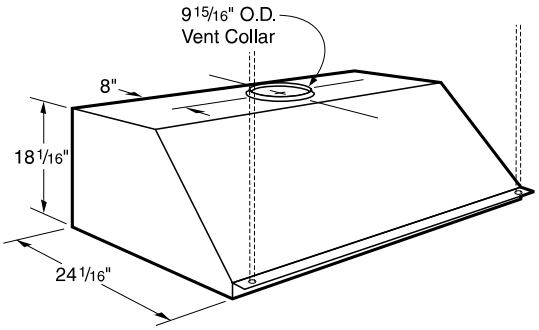

Canopy Hoods are useful for conducting heat out of laboratories, and can be mounted over tables where hot plates or other heat generating apparatus is located. They are fabricated of cold rolled steel, phosphate coated with a baked chemical resistant, synthetic resin finish, or of type 304 stainless steel. They are available 3 feet, 4 feet, 5 feet , 6 feet and 8 feet long. The painted steel canopies are available with or without a lining of ¼" thick Kemglass. Each canopy hood is furnished a with 9 15/16" O.D. vent collar. (8 foot canopies are furnished with two duct collars, 48" on center.) (½" diameter support rods to the ceiling are not included.)

Unlined Painted Steel	Unlined Stainless Steel	
CNPHM182436	**CNPHS182436**	36"L
CNPHM182448	**CNPHS182448**	48"L
CNPHM182460	**CNPHS182460**	60"L
CNPHM182472	**CNPHS182472**	72"L
CNPHM182496	**CNPHS182496**	96"L

Demonstration & Teaching Hoods

Duo-Vision Demonstration Hood

Double-sided teaching and demonstration hood

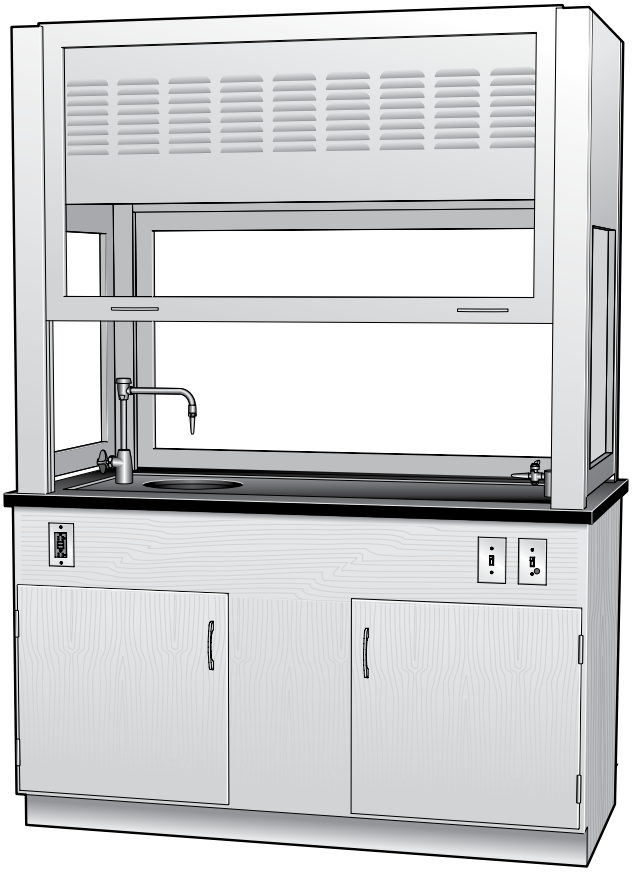

T95M483260E Glass End Panels
T95M483260S Glass End Panels/One Sash Fixed
T95M483260X Solid End Panels

DIMENSIONS:

Overall:	84" H x 32" D x 60" L (light fixtures add 5½" to overall height) (additional 10" of height for sash clearence)
Hood:	48" H x 30" D x 58" L
Interior:	40" H x 25" D x 53" L
Base Cabinet:	34¾" H x 30" D x 59" L
Worktop:	1¼" H x 32" D x 60" L

MATERIALS:

Hood Exterior:	Cold Rolled Steel
Hood Lining:	Glass & Kemglass
Base Cabinet:	Hardwood Veneer – Specify Style
Suggested Cabinet:	G84W353059D (Double Sided, ordered separately)
Worktop:	HWT1R013260 Kemresin (ordered separately)

Sink:	(1)	**SUR1038N**	12" Dia Kemresin
	(1)	**0482-BP**	1½" IPS Sink Outlet
Electric Fixtures:	(2)	**S656-1V**	120 VAC GFI Duplex Receptacle
	(1)	**0695-1S**	Blower Switch with Warning Light
	(2)	**0591-1V**	3-way Light Switch
	(1)		Dual-Lamp T8 LED Light Fixture
	(1)	**0733-01**	Blower Warning Light
Fittings:	(1)	**W-0337-8VB**	Water VB Gooseneck
	(1)	**W-0260-00**	Single Outlet Service Fittings

No service piping, electrical conduit, ducting or exhaust fan included.

Options:

Glass End Panels

T95M483260EF	Without Fixtures & Fittings
T95M483260ET	Without Top, Sink Fixtures & Fittings
T95M483260E	Hood Only

Glass End Panels & One Sash Fixed

T95M483260SF	Without Fixtures & Fittings
T95M483260ST	Without Top, Sink Fixtures & Fittings
T95M483260S	Hood Only

Solid End Panels

T95M483260XF	Without Fixtures & Fittings
T95M483260XT	Without Top, Sink Fixtures & Fittings
T95M483260X	Hood Only

Features:

- Dual working sashes with glass end panels for excellent visibility into hood.
- Available with solid end panels.
- Available with one sash in fixed closed position for higher access control.
- Furnished with 12" diameter sink with water faucet and service fitting.
- Furnished with 3-way light switch, blower switch with warning light and gfi duplex receptacles.
- Available with or without base cabinet, worktop, fittings and fixtures.

NOTE: For hood to contain fumes, both sashes can not be open at the same time.

Sash Opening: 53" x 30" *
Duct Collar: 12" Dia

Recommended
Face Velocity: 80 feet/minute
Exhaust Volume: 940 cfm @ 80 fpm face velocity
Static Pressure: 0.30" @ 940 cfm

* based on only one sash open at a time.

KEWAUNEE

Demonstration & Teaching Hoods

Hemco Portable Demonstration Hood

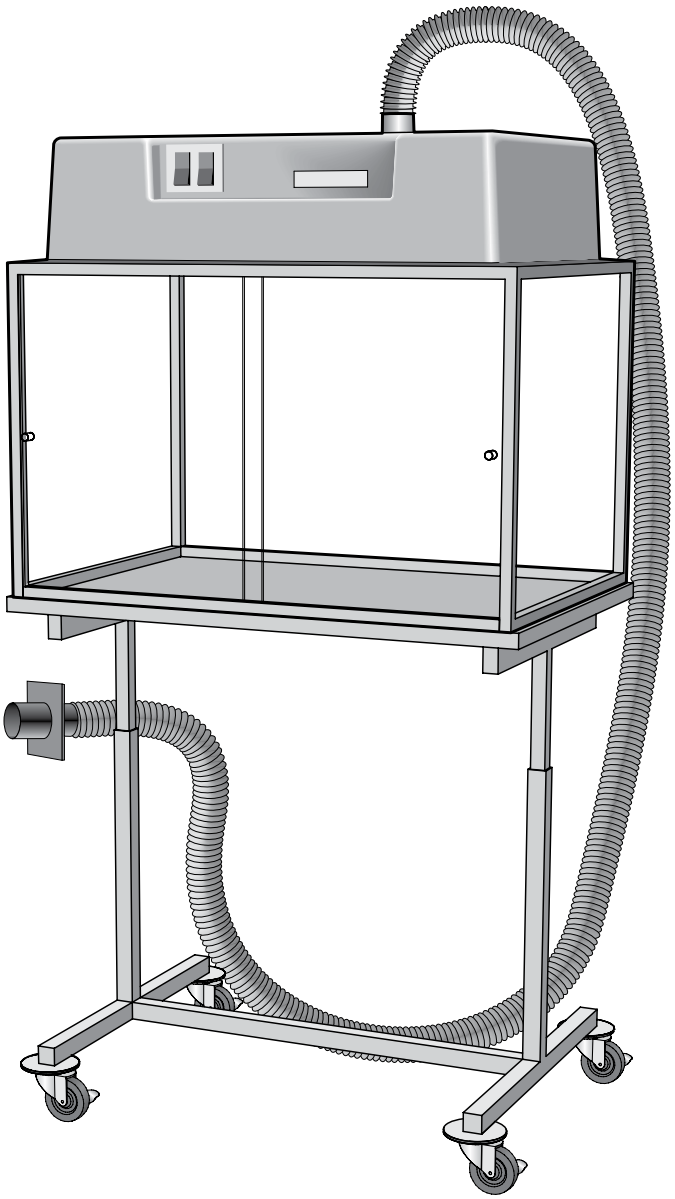

F-5335-00 Portable Demonstration Hood

DIMENSIONS:

Overall:	30" H x 24" D x 35" L
Interior:	22" H x 24" D x 33½" L
Mobile Base:	Adjustable Height from 28½"–38½"

MATERIALS:

Hood Exterior:	Clear Acrylic & Anodized Aluminum
Top Enclosure:	Chemical Resistant Fiberglass
Worksurface:	Chemical Resistant Fiberglass

INCLUDES:

Motor/Blower:	Integral, 120 VAC, 100 cfm
Light:	Vapor Proof
Switches:	(1) Light, (1) Blower
Cord:	8 feet, three wire
Vent Outlet:	PVC
Ducting:	12 feet, 3" diameter Flexible PVC
Duct Connection:	Polyglass Quick Connect

Supreme Air Fume Hood Technical Data

Bench Hood – Rough-In Information

Rough-In for H05–H07–H10–H70 Bench Hoods

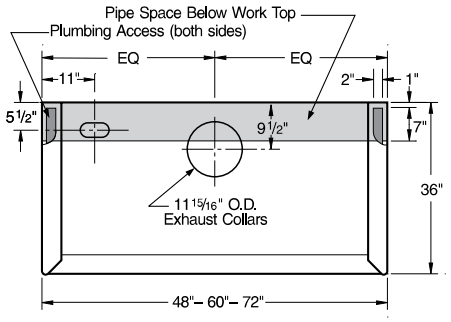

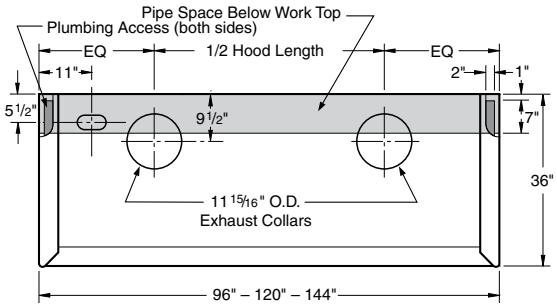

Rough-In for H08 & H09 ADA Bench Hood

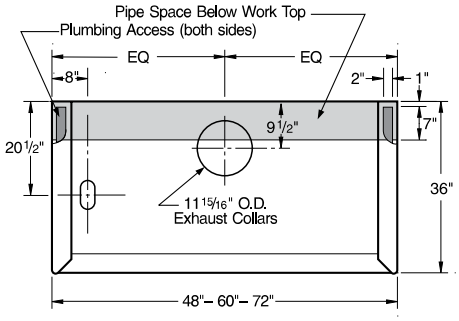

Bench Hood – Dimensional Information

Vertical Section H05 & H07 Bench Hoods

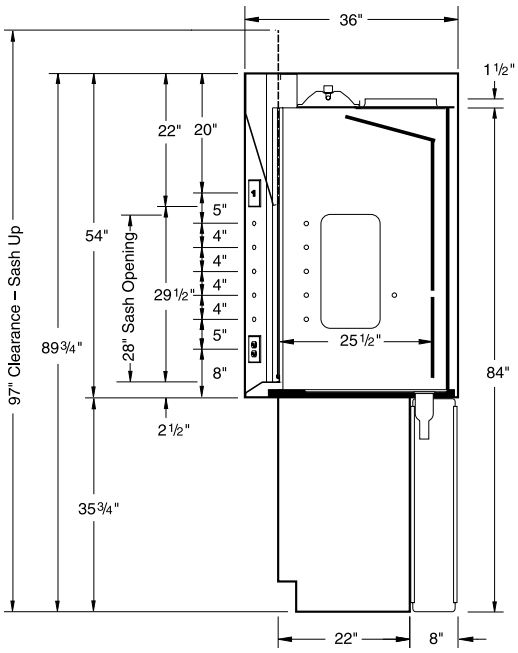

Vertical Section H08 & H09 ADA Bench Hood

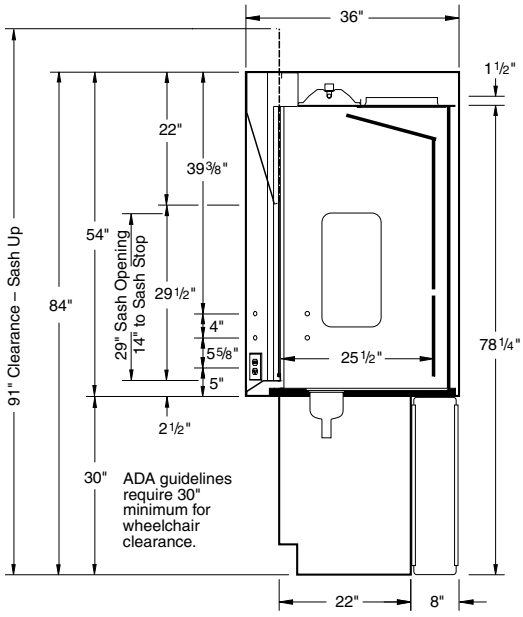

Supreme Air Fume Hood Technical Data

Bench Hood – Dimensional Information

Vertical Section
H10 Split Sash Bench Hood

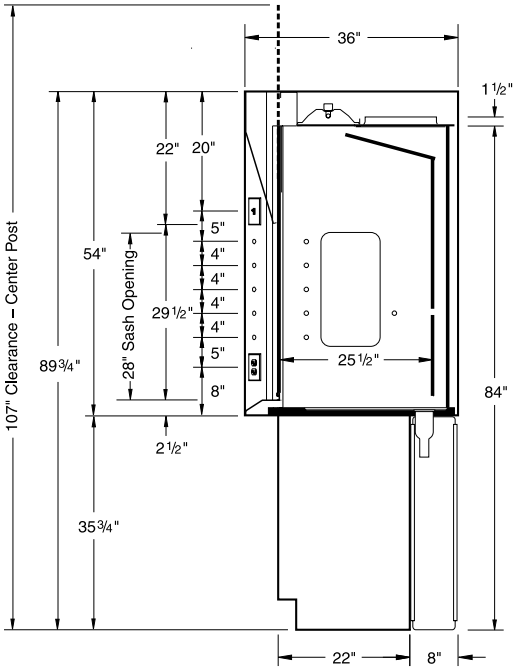

Vertical Section
H70 Horizontal Sash Bench Hood

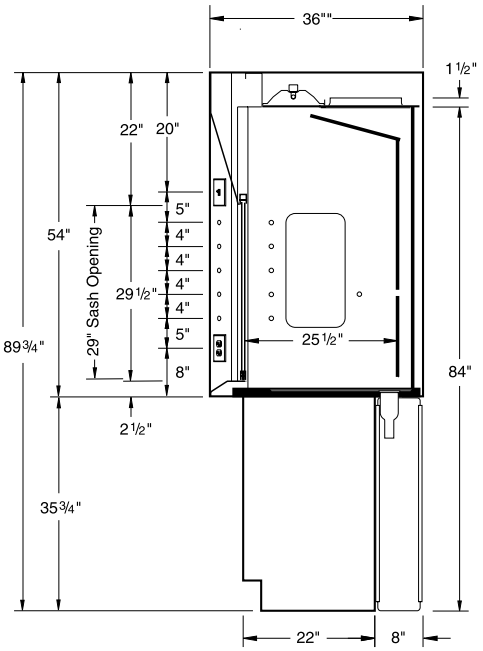

Supreme Air Fume Hood Technical Data

Isotope Hood – Rough-In & Dimensional Information

Rough-In for H20 Isotope Bench Hood

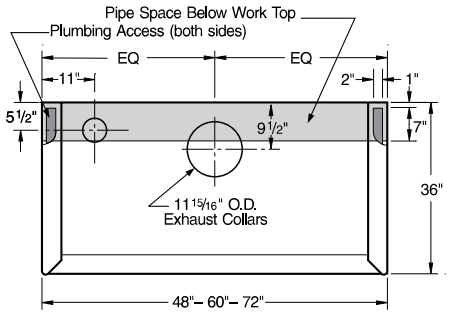

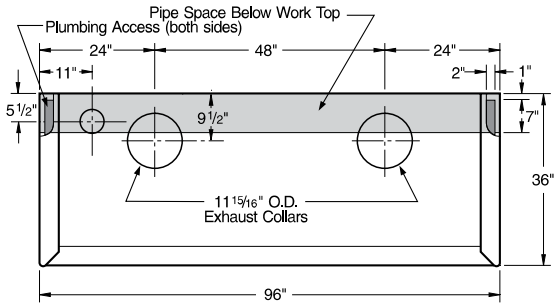

Vertical Section H20 Isotope Bench Hood

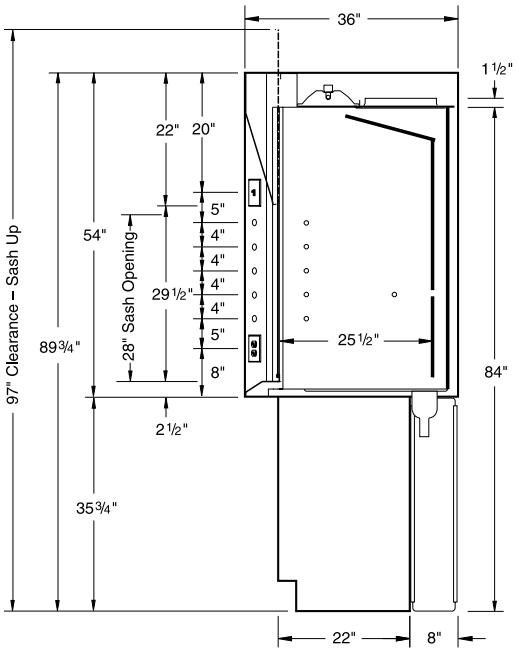

Perchloric Acid Hood – Rough-In & Dimensional Information

Rough-In for H25 Perchloric Acid Hood

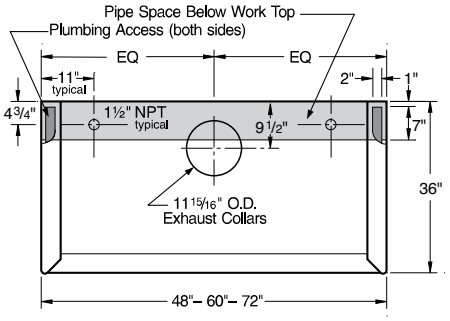

Vertical Section H25 Perchloric Acid Bench Hood

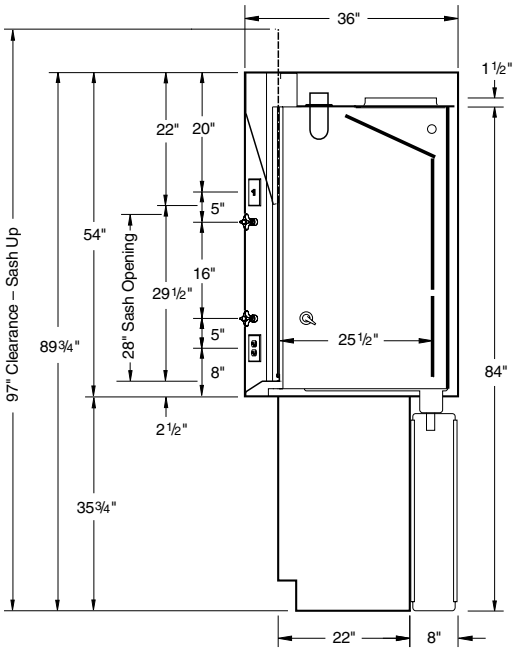

KEWAUNEE

Supreme Air Fume Hood Technical Data

Walk-In Hood – Rough-In Information

Rough-In for H30 & H32 Vertical Sash Walk-In Hoods

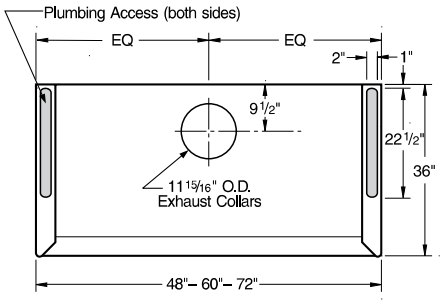

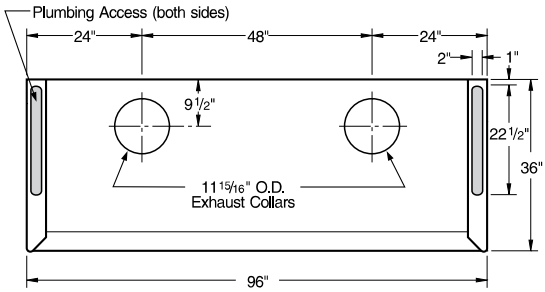

Rough-In for H34 Horizontal Sash Walk-In Hood

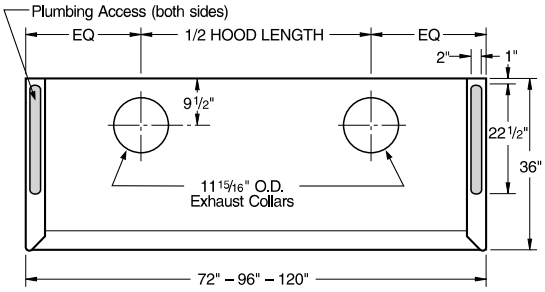

Walk-In Hood – Dimensional Information

Vertical Section
H30 & H32 Vertical Sash Walk-In Hoods

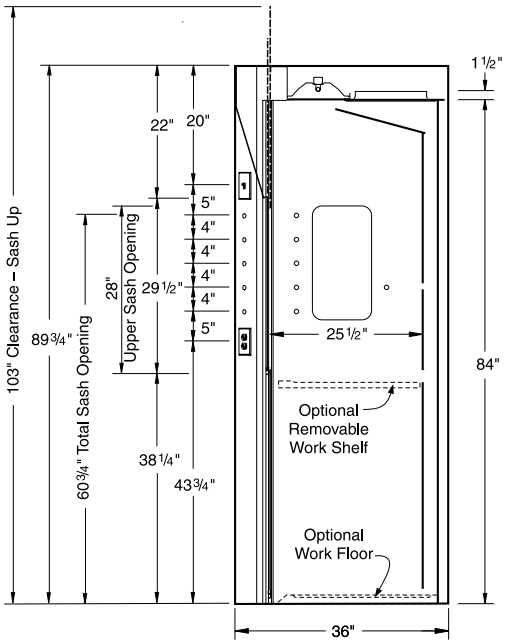

Vertical Section
H34 Horizontal Sash Walk-In Hood

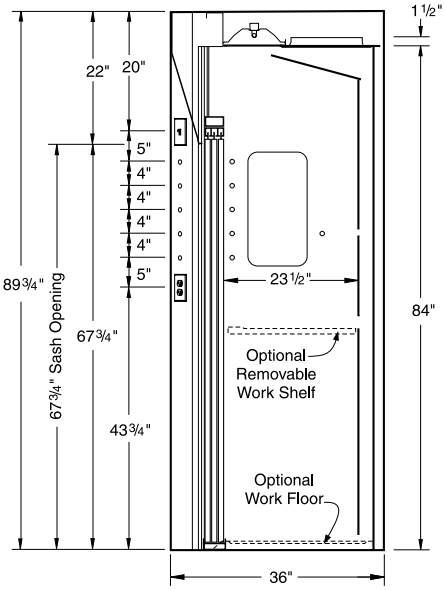

Supreme Air Fume Hood Technical Data

Dynamic Barrier Walk-In – Rough-In & Dimensional Information

Rough-In for H52 Dynamic Barrier Walk-In Hood

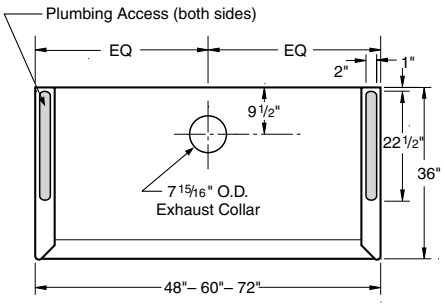

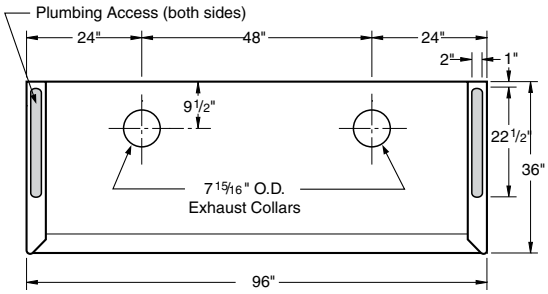

Vertical Section H52 Dynamic Barrier Walk-In Hood

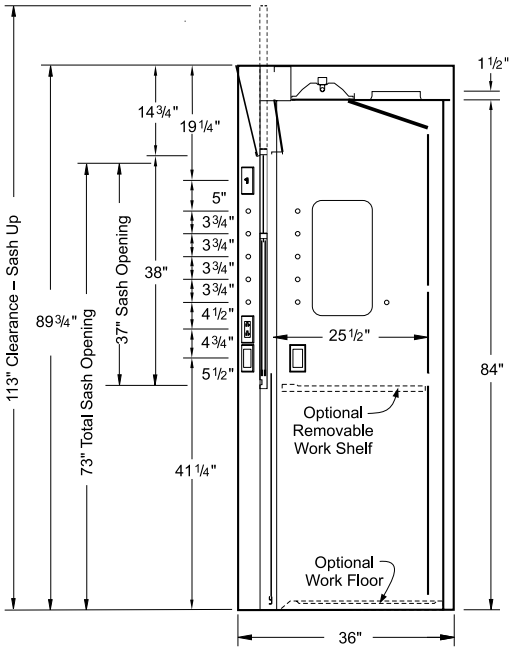

Distillation Hood – Rough-In & Dimensional Information

Rough-In for H36 Distillation Hood

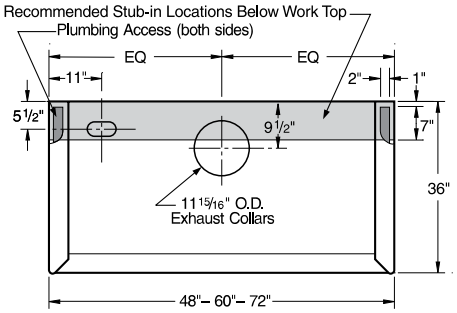

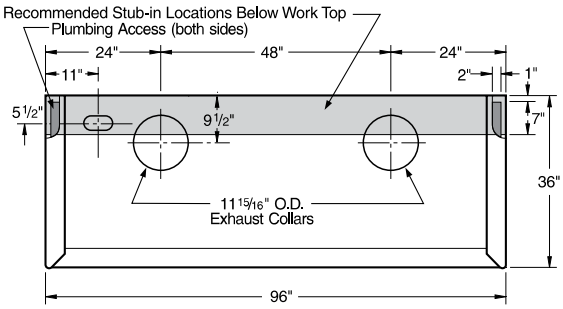

Vertical Section H36 Distillation Hood

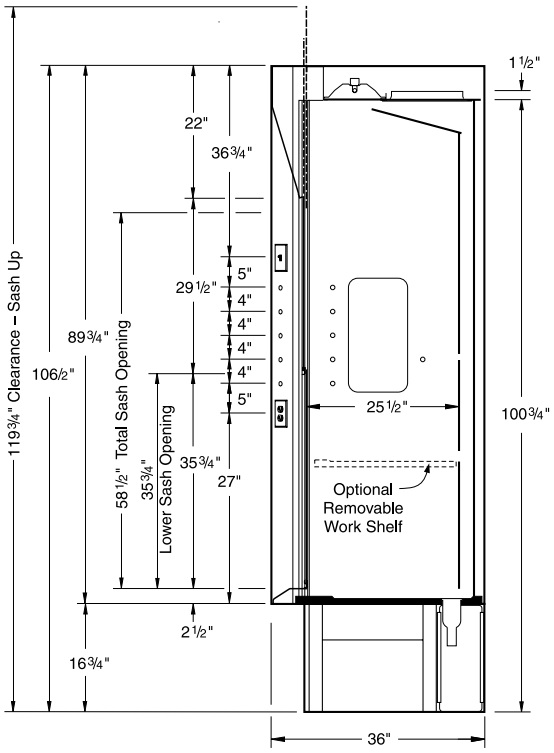

KEWAUNEE

Supreme Air Fume Hood Technical Data

HOPEC Bench Hood – Rough-In & Dimensional Information

Rough-In for HOP Bench Hoods

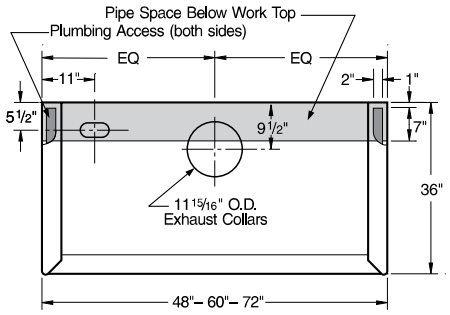

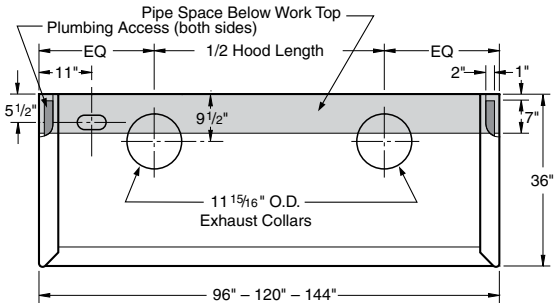

Vertical Section HOP Bench Hoods

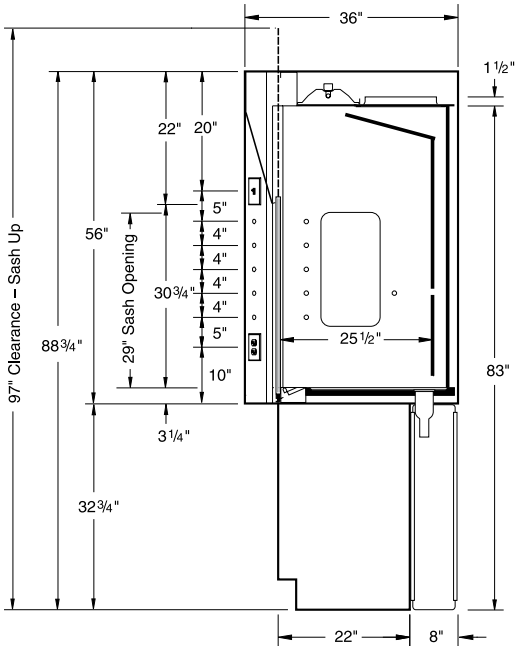

Dynamic Barrier Bench Hood – Rough-In & Dimensional Information

Rough-In for H50 Dynamic Barrier Bench Hood

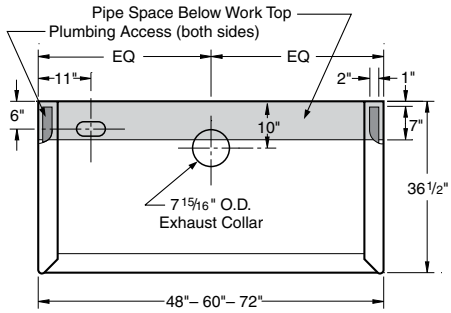

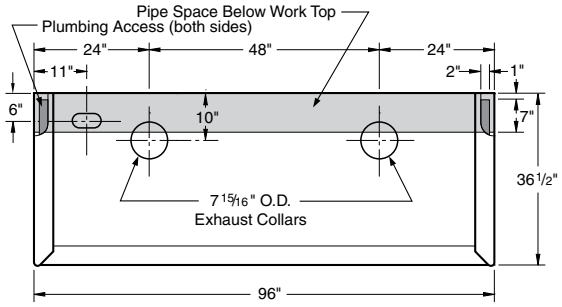

Vertical Section H50 Dynamic Barrier Bench Hood

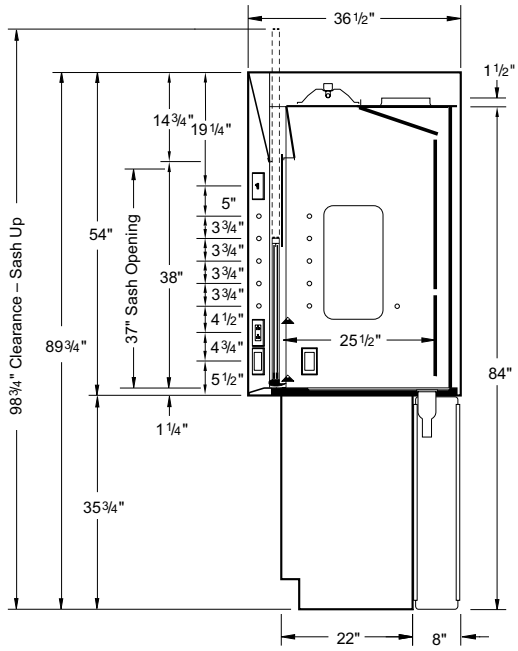

Supreme Air Fume Hood Technical Data

Auxiliary Air Chamber – Rough-In & Dimensional Information

4'-0" – 48"

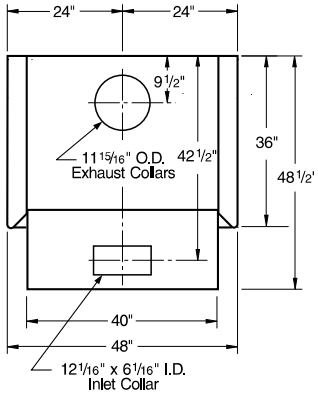

5'-0" – 60"

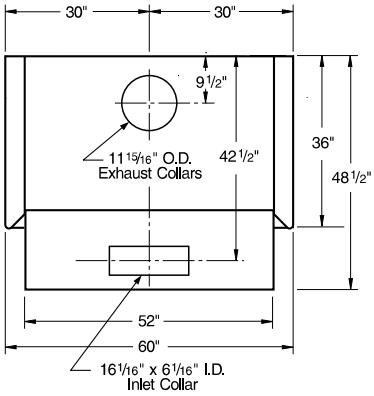

6'-0" – 72"

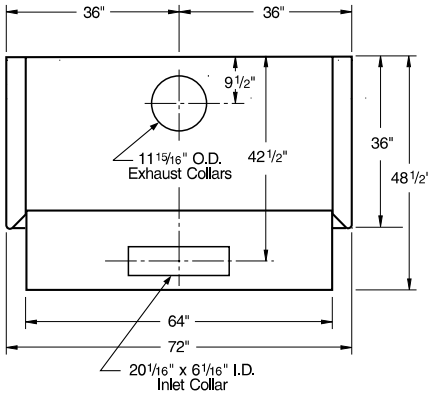

8'-0" – 96"

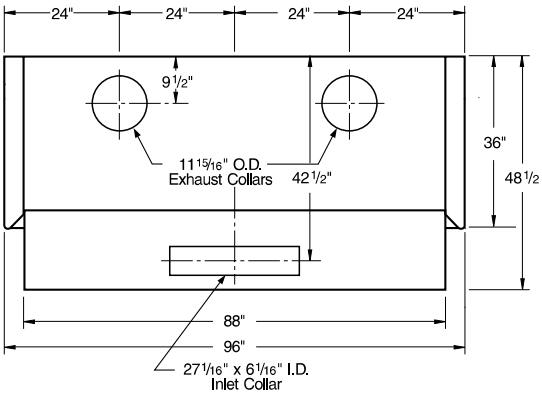

10'-0" – 120"

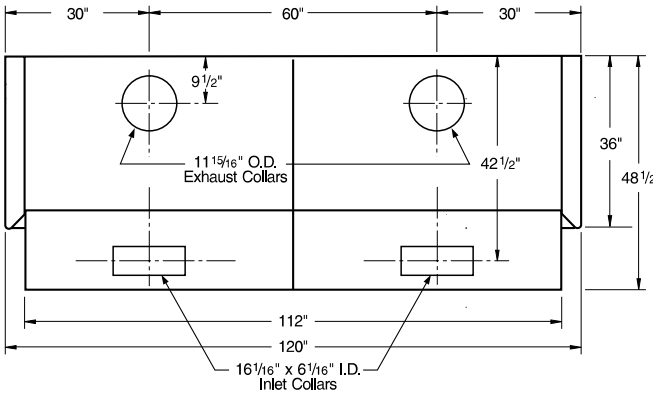

12'-0" – 144"

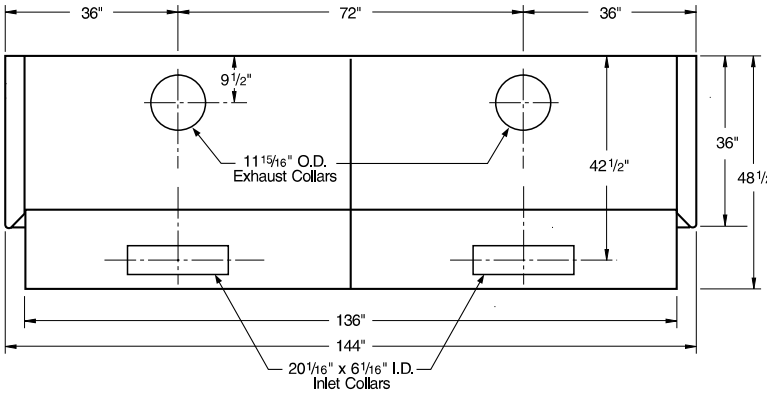

Vertical Section

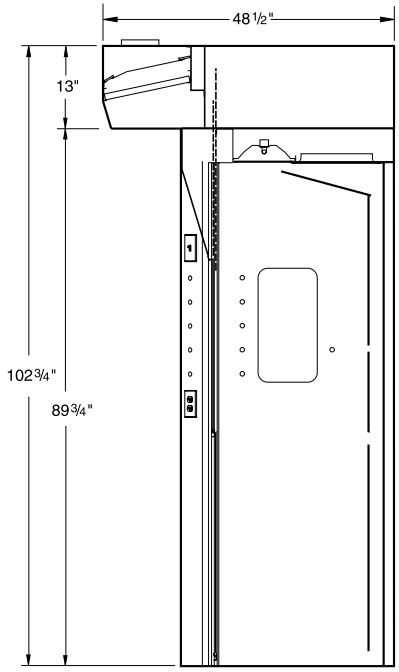

KEWAUNEE

General Fan Information

Centrifugal Fans are air moving devices in which the air flow is perpendicular to the shaft on which the impeller wheel is mounted. The impeller wheel is mounted in a scroll-type housing, which is required to develop the rated pressures. All fans offered in this catalog use impeller wheels with forward inclined blades with respect to the direction of rotation.

Rear view of fan
with weather cover removed

Forward Inclined Blade Fans have small, curved blades with the tips inclined in the direction of rotation.

All fans have rubber mounted, dynamically balanced impeller wheels. The rugged, welded housings and integrated weather covers have a chemical resistant, synthetic resin finish. V-belts are oil resistant and static conductive. Fans are rated in accordance with AMCA. Vibration isolators are provided with all fans.

Fans are shipped in the vertical upblast discharge position, with clockwise rotation as illustrated. However, when specified, they can be factory assembled and shipped in any of seven (7) other clockwise rotation discharge positions.

Front view of fan
with weather cover in place

Catalog Number Explanation

HFS-1310-T1

Fan Type
HFS = Hood Fan Steel Housing

Inlet Size
09 = 9"
10 = 10"
13 = 13¼"
14 = 14½"

Motor Horsepower
02 = ¼ HP **05** = ½ HP **10** = 1 HP **20** = 2 HP
03 = ⅓ HP **07** = ¾ HP **15** = 1½ HP

Motor Type
T = Totally Enclosed

Motor Phase – Voltage
1 = Single-Phase – 115/208-230 VAC
3 = Three-Phase – 208-230/460 VAC

* Fans with explosion proof motors include spark-proof housing and impeller wheel construction.

General Fan Information

Exhaust System Recommendations

1. Mount exhaust fans on the roof so that the ducting leading to the fan inlet is under negative static pressure. If exhaust fans are mounted inside the building, all ducting connected to the fan outlet will be under positive static pressure, and if any leaks should develop in the portion of the duct inside the building, hazardous and/or toxic fumes can be forced out of the duct into that area of the building.
2. To obtain the lowest practical noise level in the exhaust system, we suggest the following measures when there is no conflict with other requirements of the system:

   a. Use vibration isolators for mounting the exhaust fan assembly.

   b. Select an exhaust fan that will deliver the desired CFM and static pressure with the lowest practical impeller wheel RPM. If possible, use a duct size large enough to keep duct velocities under 1800 FPM velocity.

   c. Use a flexible connection at the fan inlet to isolate mechanical transmission of noise via the ducting between the hood and the exhaust fan.

   d. Design the exhaust duct system with the fewest possible elbows or other fittings. Use radius type elbows and avoid square elbows. Use gradual, tapered transitions where transitions are necessary, and avoid abrupt changes in configuration or cross sectional area.
3. When ordering an exhaust fan, specify the orientation of discharge desired. Vertical upblast discharge is most common and will be supplied unless otherwise specified.
4. Fans used for hood exhaust at altitudes above 1000 ft. may require a correction factor to provide the desired CFM and static pressure. Consult the factory for additional information relating to your specific application.

How To Select a Fume Hood Exhaust Fan using the Fan Recommendation Charts

1. Find the hood type and size in the charts on the next two pages and note the recommended duct size.
2. Determine the length of the duct from the top of the fume hood to the location of fan were it will be mounted. Be sure to include all horizontal runs as well as vertical runs.
3. Determine the number of 90 degree elbows required.
4. Refer to Chart A to determine the equivalent length of straight duct resistance for each elbow.

   Note, the values in Chart A are based on elbows with a turning radius of 1.5 times the duct diameter. Elbows with a smaller turning radius should not be used as they have larger static pressure losses and create more noise.
5. Multiply the equivalent straight duct length from Chart A by the number of elbows used and add it to the overall duct length to determine the equivalent length of duct for the system.
6. Use that length (rounded up the the next larger size) to find the recommended fan from the chart.
7. Select the required motor type to finish the catalog number.
   T1 = Totally enclosed–Single-phase
   T3 = Totally enclosed–Three- phase

Chart A

Duct Size	Equivalent Straight Duct Resistance
8"	15 feet
10"	20 feet
12"	25 feet
14"	30 feet
16"	36 feet
18"	41 feet
20"	46 feet

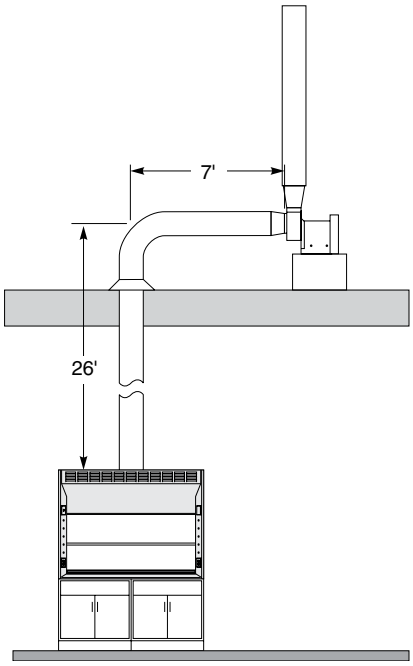

Example:

The recommended fan with a Totally enclosed, Single-phase motor for the hood and duct system shown in the sketch to the right would be as follows:

1. Recommended duct size		=	**12"**
2. Length of duct	26' + 7'	=	**33'**
3. Number of elbows		=	**1**
4. 1 elbow x 25'		=	**25'**
5. Straight duct Elbow equivalent	33' +25'	=	**58'**
6. Recommended fan for 6 foot H05 Fume Hood and equivalent of 75' of duct			**HFS-1007**
7. with Totally enclose – Single-Phase motor			**HFS-1007-T1**

KEWAUNEE

Fan Recommendation Charts

	Equivalent Length in Straight Duct		25 Feet		50 Feet		75 Feet		100 Feet		150 Feet	
Hood Size	CFM	Duct Size	Total S.P.	Fan Model Number	Total S.P.	Fan Model Number	Total S.P.	Fan Model Number	Total S.P.	Fan Model Number	Total S.P.	Fan Model Number
H05	**General Purpose Bench Hood**											
4 ft	810	12"	¼	**HFS-0902**	⅜	**HFS-0902**	⅜	**HFS-0902**	⅜	**HFS-0902**	½	**HFS-0903**
5 ft	1050	12"	⅜	**HFS-0903**	½	**HFS-0905**	½	**HFS-0905**	⅝	**HFS-0905**	¾	**HFS-0905**
6 ft	1290	12"	½	**HFS-1007**	⅝	**HFS-1007**	¾	**HFS-1007**	¾	**HFS-1007**	1	**HFS-1007**
8 ft	1770	14"	½	**HFS-1310**	½	**HFS-1310**	⅝	**HFS-1310**	⅝	**HFS-1310**	⅞	**HFS-1310**
H07	**Combination Sash Bench Hood**											
4 ft	480	12"	¼"	**HFS-0902**	¼"	**HFS-0902**	¼"	**HFS-0902**	¼"	**HFS-0902**	¼"	**HFS-0902**
5 ft	630	12"	¼"	**HFS-0902**	¼"	**HFS-0902**	¼"	**HFS-0902**	¼"	**HFS-0902**	¼"	**HFS-0902**
6 ft	780	12"	¼"	**HFS-0902**	¼"	**HFS-0902**	⅜"	**HFS-0902**	⅜"	**HFS-0902**	⅜"	**HFS-0902**
8 ft	1090	12"	¼"	**HFS-0903**	⅜"	**HFS-0903**	½"	**HFS-0905**	½"	**HFS-0905**	⅝"	**HFS-0905**
H08	**ADA Bench Hood**											
4 ft	610	12"	¼"	**HFS-0902**	¼"	**HFS-0902**	¼"	**HFS-0902**	¼"	**HFS-0902**	¼"	**HFS-0902**
5 ft	790	12"	¼"	**HFS-0902**	¼"	**HFS-0902**	⅜"	**HFS-0902**	⅜"	**HFS-0902**	⅜"	**HFS-0902**
6 ft	980	12"	⅜"	**HFS-0903**	⅜"	**HFS-0903**	½"	**HFS-0905**	½"	**HFS-0905**	⅝"	**HFS-0905**
H09	**ADA Combination Sash Bench Hood**											
4 ft	480	12"	¼"	**HFS-0902**	¼"	**HFS-0902**	¼"	**HFS-0902**	¼"	**HFS-0902**	¼"	**HFS-0902**
5 ft	630	12"	¼"	**HFS-0902**	¼"	**HFS-0902**	¼"	**HFS-0902**	¼"	**HFS-0902**	¼"	**HFS-0902**
6 ft	780	12"	¼"	**HFS-0902**	¼"	**HFS-0902**	⅜"	**HFS-0902**	⅜"	**HFS-0902**	⅜"	**HFS-0902**
H10	**Split Sash Bench Hood**											
8 ft	1770	14"	½"	**HFS-1310**	½"	**HFS-1310**	⅝"	**HFS-1310**	⅝"	**HFS-1310**	⅞"	**HFS-1310**
10 ft	2260	16"	½"	**HFS-1310**	⅝"	**HFS-1310**	⅝"	**HFS-1310**	⅝"	**HFS-1310**	¾"	**HFS-1310**
12 ft	2740	16"	⅝"	**HFS-1315**	¾"	**HFS-1315**	⅞"	**HFS-1315**	⅞"	**HFS-1315**	1⅛"	**HFS-1315**
H20	**Isotope Bench Hood**											
4 ft	980	12"	⅜"	**HFS-0903**	½"	**HFS-0905**	½"	**HFS-0905**	½"	**HFS-0905**	⅝"	**HFS-0905**
5 ft	1260	12"	½"	**HFS-1007**	⅝"	**HFS-1007**	¾"	**HFS-1007**	¾"	**HFS-1007**	1"	**HFS-1007**
6 ft	1550	12"	¾"	**HFS-1310**	⅞"	**HFS-1310**	1⅛"	**HFS-1310**	1⅛"	**HFS-1310**	1⅜"	**
8 ft	2130	14"	⅝"	**HFS-1310**	¾"	**HFS-1310**	1"	**HFS-1315**	1"	**HFS-1315**	1⅛"	**HFS-1315**
H25	**Perchloric Acid Bench Hood**											
4 ft	980	12"	⅜"	***	½"	***	½"	***	½"	***	⅝"	***
5 ft	1260	12"	½"	***	⅝"	***	¾"	***	¾"	***	1"	***
6 ft	1550	12"	¾"	***	⅞"	***	1⅛"	***	1⅛"	***	1⅜"	***
H50	**Dynamic Barrier – Ultra Low Constant Volume Hood**											
4 ft	225	8"	⅛"	**HFS-0905***	⅛"	**HFS-0905***	⅛"	**HFS-0905***	⅛"	**HFS-0905***	¼"	**HFS-0905***
5 ft	280	8"	⅛"	**HFS-0905***	⅛"	**HFS-0905***	¼"	**HFS-0905***	¼"	**HFS-0905***	¼"	**HFS-0905***
6 ft	350	8"	¼"	**HFS-0905***	¼"	**HFS-0905***	¼"	**HFS-0905***	⅜"	**HFS-0905***	½"	**HFS-0905***
8 ft	485	8"	¼"	**HFS-0905***	⅜"	**HFS-0905***	⅜"	**HFS-0905***	⅝"	**HFS-0905***	¾"	**HFS-0905***
HOP	**HOPEC General Purpose Bench Hood**											
4 ft	400	12"	¼"	**HFS-0902**	¼"	**HFS-0902**	¼"	**HFS-0902**	¼"	**HFS-0902**	¼"	**HFS-0902**
5 ft	540	12"	¼"	**HFS-0902**	¼"	**HFS-0902**	¼"	**HFS-0902**	¼"	**HFS-0905**	¼"	**HFS-0902**
6 ft	680	12"	¼"	**HFS-0902**	¼"	**HFS-0902**	⅜"	**HFS-0902**	⅜"	**HFS-0902**	⅜"	**HFS-0902**
8 ft	950	14"	¼"	**HFS-0903**	⅜"	**HFS-0903**	½"	**HFS-0903**	½"	**HFS-0903**	⅝"	**HFS-0905**

* Use a duct air by-pass at fan to increase the amount of air handled by fan.
** Standard fan not available, consult your Kewaunee sales representative.
*** Requires a Perchloric Acid exhaust fan, consult your Kewaunee sales representative.

KEWAUNEE

Fan Recommendation Charts

	Equivalent Length in Straight Duct		25 Feet		50 Feet		75 Feet		100 Feet		150 Feet	
Hood Size	CFM	Duct Size	Total S.P.	Fan Model Number	Total S.P.	Fan Model Number	Total S.P.	Fan Model Number	Total S.P.	Fan Model Number	Total S.P.	Fan Model Number
H70	**Horizontal Sash Bench Hood**											
4 ft	520	12"	¼"	**HFS-0902**	¼"	**HFS-0902**	¼"	**HFS-0902**	¼"	**HFS-0902**	¼"	**HFS-0902**
5 ft	680	12"	¼"	**HFS-0902**	¼"	**HFS-0902**	¼"	**HFS-0902**	¼"	**HFS-0902**	⅜"	**HFS-0902**
6 ft	850	12"	¼"	**HFS-0902**	¼"	**HFS-0902**	⅜"	**HFS-0902**	⅜"	**HFS-0902**	½	**HFS-0903**
8 ft	1180	12"	⅜"	**HFS-0905**	⅜"	**HFS-0905**	½"	**HFS-0905**	⅝"	**HFS-0905**	¾"	**HFS-0905**
H30	**General Purpose Walk-in Hood**											
4 ft	810	12"	¼"	**HFS-0902**	⅜"	**HFS-0902**	⅜"	**HFS-0902**	⅜"	**HFS-0902**	½"	**HFS-0903**
5 ft	1050	12"	⅜"	**HFS-0903**	½"	**HFS-0905**	½"	**HFS-0905**	⅝"	**HFS-0905**	¾"	**HFS-0905**
6 ft	1290	12"	½"	**HFS-1007**	⅝"	**HFS-1007**	¾"	**HFS-1007**	¾"	**HFS-1007**	1"	**HFS-1007**
8 ft	1770	14"	½"	**HFS-1310**	½"	**HFS-1310**	⅝"	**HFS-1310**	⅝"	**HFS-1310**	⅞"	**HFS-1310**
H32	**Combination Sash Walk-in Hood**											
4 ft	480	12"	¼"	**HFS-0902**	¼"	**HFS-0902**	¼"	**HFS-0902**	¼"	**HFS-0902**	¼"	**HFS-0902**
5 ft	630	12"	¼"	**HFS-0902**	¼"	**HFS-0902**	¼"	**HFS-0902**	¼"	**HFS-0902**	¼"	**HFS-0902**
6 ft	780	12"	¼"	**HFS-0902**	¼"	**HFS-0902**	⅜"	**HFS-0902**	⅜"	**HFS-0902**	⅜"	**HFS-0902**
8 ft	1090	12"	¼"	**HFS-0903**	⅜"	**HFS-0903**	½"	**HFS-0905**	½"	**HFS-0905**	⅝"	**HFS-0905**
H34	**Horizontal Sash Walk-in Hood**											
6 ft	2210	16"	⅝"	**HFS-1310**	¾"	**HFS-1310**	¾"	**HFS-1310**	⅞"	**HFS-1310**	⅞"	**HFS-1310**
8 ft	3070	18"	⅞"	**HFS-1420**	⅞"	**HFS-1420**	⅞"	**HFS-1420**	1"	**HFS-1420**	1⅛"	**HFS-1420**
10 ft	3930	20"	1¼"	**	1¼"	**	1¼"	**	1⅜"	**	1½"	**
H36	**Distillation Hood**											
4 ft	1160	12"	½"	**HFS-0905**	⅝"	**HFS-0905**	¾"	**HFS-0905**	¾"	**HFS-0905**	⅞"	**HFS-1007**
5 ft	1510	12"	¾"	**HFS-1310**	⅞"	**HFS-1310**	1"	**HFS-1310**	1⅛	**HFS-1310**	1⅜	**
6 ft	1860	12"	1"	**HFS-1310**	1¼"	**HFS-1315**	1⅜"	**HFS-1315**	1⅝"	**HFS-1315**	1⅞"	**
8 ft	2550	16"	¾"	**HFS-1315**	¾"	**HFS-1315**	⅞"	**HFS-1315**	⅞"	**HFS-1315**	1⅛"	**HFS-1315**
H52	**Dynamic Barrier – Ultra Low Constant Volume Walk-in Hood**											
4 ft	300	8"	⅛"	**HFS-0905***	¼"	**HFS-0905***	¼"	**HFS-0905***	¼"	**HFS-0905***	¼"	**HFS-0905***
5 ft	400	8"	¼"	**HFS-0905***	⅜"	**HFS-0905***	⅜"	**HFS-0905***	½"	**HFS-0905***	⅝"	**HFS-0905***
6 ft	500	8"	⅜"	**HFS-0905***	½"	**HFS-0905***	½"	**HFS-0905***	⅝"	**HFS-0905***	⅞"	**HFS-0905***
8 ft	675	10"	¼"	**HFS-0902***	⅜"	**HFS-0902***	⅜"	**HFS-0902***	½"	**HFS-0902***	⅝"	**HFS-0903***

* Use a duct air by-pass at fan to increase the amount of air handled by fan.
** Standard fan not available, consult your Kewaunee sales representative.

KEWAUNEE

General Fan Information

How To Select V-Belt Drive Fans (when not using the Fan Recommendation Charts)

1. Select the size fan desired from the CFM-Static Pressure charts on the next several pages, and sizing instructions below.
2. Select the type of motor desired to suit the operating conditions:
   T1 = Totally enclosed–Single-phase
   T3 = Totally enclosed–Three- phase
3. V-belt drive fans are provided with adjustable pitch motor sheaves to cover the RPM range indicated for each fan. If the desired RPM and/or CFM-Static Pressure is not indicated, the fan will be shipped with the adjustable motor sheave set to the midpoint of the RPM range.

Sizing a Fan

To determine the size of a fan required for a fume hood system, both the air volume flow rate and the system static pressure must be determined. The air volume flow rate at various face velocities, in cubic feet per minute (CFM), is shown on the specification page for each style and size of fume hood. The system static pressure must be calculated based on the air volume flow rate, static pressure, and duct configuration.

Below is a simplified method of calculating the system static pressure which gives sufficient accuracy for the small fan systems used for one or two laboratory fume hoods. This method ignores the effect poor inlet conditions can have on fan performance. This effect can be minimized by using at least five (5) feet of straight duct at the inlet of the fan and having a gradual transition to the fan inlet.

1. Determine Duct Size
The duct size used should be at least as large as the duct collar on the fume hood. (12" on all Supreme Air Fume Hoods.) For quiet operation, a duct velocity of less than 1800 feet per minute should be used. Duct velocities for various duct sizes and air volume flow rates are given in Table 1.

2. Determine Hood Static Pressure
The hood static pressure can be found listed next to the air volume flow rates on the specification page for each style fume hood.

3. Calculated Loss in Straight Duct
The length of straight duct should be known to within ten (10) feet of the actual length. Small inaccuracies in the length of duct do not affect the results. The static pressure loss per hundred feet of straight duct is given in Table 2. The static pressure loss in the straight duct is equal to the length of straight duct in feet, multiplied by the value obtained from Table 2, divided by 100.

4. Calculated Loss in Elbow
The exact number of elbows needs to be determined as it has a significant effect on the results. Table 3 gives the static pressure loss per elbow. The values in Table 3 are based on elbows with a turning radius of 1.5 times the duct diameter. Elbows of smaller turning radius should not be used as they have larger static pressure losses and create more noise. The static pressure loss in the elbows is equal to the number of elbows multiplied by the value obtained from Table 3.

5. Calculate Loss in "Y"
Table 4 gives the static pressure loss for a "Y" connection used on hoods with two duct collars or duct systems serving two fume hoods. The values in Table 4 are based on "Y"s with included angles of 90 degrees. "Y"s with larger included angles and "T"s should not be used as they have larger pressure losses and create more noise.

6. Calculate Total Static Pressure
The total system static pressure is the sum of the fume hood static pressure, the static pressure loss due to friction in the straight duct, and the static pressure losses due to change in direction and turbulence in the elbows and "Y"s. Add the values obtained in steps 2 through 5 to calculate the total system static pressure.

Table 1

	Duct Velocity feet per minute				
CFM	**10"**	**12"**	**14"**	**16"**	**18"**
400	733	509			
500	917	637	468		
600	1100	764	561		
700	1283	891	655	501	
800	1467	1019	748	573	
900	1650	1146	842	645	509
1000	1833	1273	935	716	566
1100	2017	1401	1029	788	622
1200	2200	1528	1123	859	679
1300	2384	1655	1216	931	736
1400	2567	1783	1310	1003	792
1500	2750	1910	1403	1074	849
1600	2934	2037	1497	1146	905
1700		2165	1590	1218	962
1800		2292	1684	1289	1019
1900		2419	1777	1361	1075
2000		2546	1871	1432	1132
2200		2801	2058	1576	1245
2400			2245	1719	1358
2600			2432	1862	1471
2800			2619	2005	1584
3000			2806	2149	1698
3200			2993	2292	1811
3400				2435	1924
3600				2578	2037
3800				2722	2150
4000				2865	2264

= Increased noise level

General Fan Information

Sizing a Fan (Continued)

Table 2

Static Pressure Loss per 100 Ft. of Duct in Inches of Water					
CFM	10"	12"	14"	16"	18"
400	0.09	0.04			
500	0.14	0.06	0.03		
600	0.20	0.08	0.04		
700	0.27	0.11	0.05	0.03	
800	0.34	0.14	0.06	0.03	
900	0.43	0.17	0.08	0.04	0.02
1000	0.52	0.21	0.10	0.05	0.03
1100	0.63	0.25	0.12	0.06	0.03
1200	0.74	0.30	0.14	0.07	0.04
1300	0.86	0.34	0.16	0.08	0.04
1400	0.99	0.40	0.18	0.09	0.05
1500	1.13	0.45	0.21	0.11	0.06
1600	1.28	0.51	0.24	0.12	0.07
1700		0.57	0.26	0.14	0.07
1800		0.64	0.29	0.15	0.08
1900		0.71	0.33	0.17	0.09
2000		0.78	0.36	0.18	0.10
2200		0.94	0.43	0.22	0.12
2400			0.51	0.26	0.14
2600			0.59	0.30	0.17
2800			0.68	0.35	0.19
3000			0.78	0.40	0.22
3200			0.88	0.45	0.25
3400				0.50	0.28
3600				0.56	0.31
3800				0.62	0.35
4000				0.69	0.38

= Increased noise level

Table 3

Static Pressure Loss per 90 Degree Elbow* in Inches of Water					
CFM	10"	12"	14"	16"	18"
400	0.01	0.01			
500	0.02	0.01	0.01		
600	0.03	0.01	0.01		
700	0.04	0.02	0.01	0.01	
800	0.05	0.03	0.01	0.01	
900	0.07	0.03	0.02	0.01	0.01
1000	0.08	0.04	0.02	0.01	0.01
1100	0.10	0.05	0.03	0.02	0.01
1200	0.12	0.06	0.03	0.02	0.01
1300	0.14	0.07	0.04	0.02	0.01
1400	0.16	0.08	0.04	0.02	0.02
1500	0.18	0.09	0.05	0.03	0.02
1600	0.21	0.10	0.05	0.03	0.02
1700		0.11	0.06	0.04	0.02
1800		0.13	0.07	0.04	0.03
1900		0.14	0.08	0.05	0.03
2000		0.16	0.09	0.05	0.03
2200		0.19	0.10	0.06	0.04
2400			0.12	0.07	0.04
2600			0.14	0.08	0.05
2800			0.17	0.10	0.06
3000			0.19	0.11	0.07
3200			0.22	0.13	0.08
3400				0.14	0.09
3600				0.16	0.10
3800				0.18	0.11
4000				0.20	0.12

*Loss for 45 degree elbows is ½ that for 90 degree elbows.

Table 4

Static Pressure Loss for "Y" Fitting* in Inches of Water				
CFM	12"	14"	16"	18"
800	0.05	0.03	0.01	
900	0.07	0.03	0.01	
1000	0.09	0.04	0.02	
1100	0.10	0.05	0.02	0.01
1200	0.12	0.06	0.02	0.01
1300	0.14	0.07	0.03	0.02
1400	0.17	0.08	0.03	0.02
1500	0.19	0.09	0.04	0.02
1600	0.22	0.10	0.04	0.03
1700	0.25	0.11	0.05	0.03
1800	0.28	0.13	0.05	0.03
1900	0.31	0.14	0.06	0.04
2000	0.34	0.16	0.07	0.04
2200	0.41	0.19	0.08	0.05
2400		0.23	0.10	0.06
2600		0.26	0.11	0.07
2800		0.31	0.13	0.08
3000		0.35	0.15	0.09
3200		0.40	0.17	0.10
3400			0.19	0.11
3600			0.21	0.13
3800			0.24	0.14
4000			0.27	0.16

* Based on two 12" diameter ducts joining to the duct size shown. The included angle of the two 12" ducts is 90 degrees.

KEWAUNEE

V-Belt Drive Fan – Forward Inclined Blades

Wheel Diameter: 9 3/16"

Inlet: Size: 9" dia. O.D.
Area: 0.43 sq. ft. I.D.

Outlet: Size: 10¾" x 6½" outside
Area: 0.468 sq. ft. inside

HFS-0902-T1 **HFS-0902-T3** — **¼-Horse Power Motor**

Wheel RPM	CFM@ ⅛" SP	CFM@ ¼" SP	CFM@ ⅜" SP	CFM@ ½" SP	CFM@ ⅝" SP	CFM@ ¾" SP	CFM@ ⅞" SP	CFM@ 1" SP	CFM@ 1⅛" SP	CFM@ 1¼" SP	CFM@ 1⅜" SP	CFM@ 1½" SP
654	684	487	——	——	——	——	——	——	——	——	——	——
732	796	648	——	——	——	——	——	——	——	——	——	——
805	895	777	609	——	——	——	——	——	——	——	——	——
879	994	898	760	562	——	——	——	——	——	——	——	——
938	1074	986	869	720	——	——	——	——	——	——	——	——

HFS-0903-T1 **HFS-0903-T3** — **⅓-Horse Power Motor**

805	895	777	609	——	——	——	——	——	——	——	——	——
879	994	898	760	562	——	——	——	——	——	——	——	——
938	1074	986	869	720	——	——	——	——	——	——	——	——
1017	1180	1101	1003	882	730	——	——	——	——	——	——	——
1085	*	*	1114	1006	884	709	——	——	——	——	——	——
1134	*	*	*	1091	981	850	——	——	——	——	——	——

HFS-0905-T1 **HFS-0905-T3** — **½-Horse Power Motor**

1017	1180	1101	1003	882	730	——	——	——	——	——	——	——
1085	1269	1194	1114	1006	884	709	——	——	——	——	——	——
1134	1335	1260	1187	1091	981	850	——	——	——	——	——	——
1181	*	1323	1255	1169	1068	953	799	——	——	——	——	——
1245	*	*	1347	1273	1181	1081	963	796	——	——	——	——
1301	*	*	*	*	*	1184	1081	971	——	——	——	——

Wheel Diameter: 10⅝"

Inlet: Size: 10" dia. O.D.
Area: 0.53 sq. ft. I.D.

Outlet: Size: 11¾" x 8" outside
Area: 0.653 sq. ft. inside

HFS-1007-T1 **HFS-1007-T3** — **¾-Horse Power Motor**

Wheel RPM	CFM@ ⅛" SP	CFM@ ¼" SP	CFM@ ⅜" SP	CFM@ ½" SP	CFM@ ⅝" SP	CFM@ ¾" SP	CFM@ ⅞" SP	CFM@ 1" SP	CFM@ 1⅛" SP	CFM@ 1¼" SP	CFM@ 1⅜" SP	CFM@ 1½" SP
805	1235	1195	1081	928	——	——	——	——	——	——	——	——
879	1354	1327	1252	1124	979	——	——	——	——	——	——	——
938	1447	1424	1375	1267	1141	986	——	——	——	——	——	——
1017	1572	1553	1521	1450	1341	1222	1083	——	——	——	——	——
1085	1680	1662	1639	1590	1503	1397	1284	1151	——	——	——	——
1134	*	*	*	1682	1615	1516	1413	1300	1149	——	——	——

* Do not use at these static pressures. Will result in severe motor overload.

V-Belt Drive Fan – Forward Inclined Blades

Wheel Diameter: 12 3/16"

Inlet: Size: 13¼" dia. O.D.
Area: 0.94 sq. ft. I.D.

Outlet: Size: 13¼" x 9⅝" outside
Area: 0.886 sq. ft. inside

HFS-1310-T1 **HFS-1310-T3** — **1-Horse Power Motor**

Wheel RPM	CFM@ ⅛" SP	CFM@ ¼" SP	CFM@ ⅜" SP	CFM@ ½" SP	CFM@ ⅝" SP	CFM@ ¾" SP	CFM@ ⅞" SP	CFM@ 1" SP	CFM@ 1⅛" SP	CFM@ 1¼" SP	CFM@ 1⅜" SP	CFM@ 1½" SP
654	1951	1739	1650	1441	985	——	——	——	——	——	——	——
732	2217	2033	1891	1824	1616	1231	——	——	——	——	——	——
805	2463	2326	2147	2062	1991	1789	1462	——	——	——	——	——
879	2718	2606	2416	2296	2239	2170	1987	1712	——	——	——	——
938	*	*	*	2508	2421	2375	2298	2115	1860	1525	——	——

HFS-1315-T1 **HFS-1315-T3** — **1½-Horse Power Motor**

879	2718	2606	2416	2296	2239	2170	1987	1712	——	——	——	——
938	2920	2807	2657	2508	2421	2375	2298	2115	1860	1525	——	——
980	3066	2949	2822	2657	2557	2507	2456	2344	2155	1889	——	——
1030	3234	3117	3019	2854	2738	2657	2619	2564	2436	2252	2000	1693
1080	*	*	*	3056	2916	2823	2773	2732	2672	2535	2364	2120
1130	*	*	*	*	*	*	*	2889	2847	2784	2646	2486

Wheel Diameter: 13½"

Inlet: Size: 14½" dia. O.D.
Area: 1.13 sq. ft. I.D.

Outlet: Size: 14⅝" x 10¾" outside
Area: 1.079 sq. ft. inside

HFS-1420-T1 **HFS-1420-T3** — **2-Horse Power Motor**

Wheel RPM	CFM@ ⅛" SP	CFM@ ¼" SP	CFM@ ⅜" SP	CFM@ ½" SP	CFM@ ⅝" SP	CFM@ ¾" SP	CFM@ ⅞" SP	CFM@ 1" SP	CFM@ 1⅛" SP	CFM@ 1¼" SP	CFM@ 1⅜" SP	CFM@ 1½" SP
765	3008	2869	2708	2573	2477	2347	2108	1665	——	——	——	——
807	3187	3057	2909	2768	2668	2569	2418	2158	1696	——	——	——
861	3416	3297	3162	3017	2905	2823	2723	2583	2342	1942	——	——
905	3603	3492	3368	3232	3110	3012	2933	2828	2683	2446	2062	——
950	3794	3686	3570	3444	3317	3214	3138	3087	2946	2798	2568	2206
1020	*	*	*	*	*	*	3440	3372	3298	3205	3089	2907

* Do not use at these static pressures. Will result in severe motor overload.

Fan Dimensions

Exhaust/Auxiliary Air Fan Dimensions

HFS-0902 HFS-0903 HFS-0905 HFS-1007

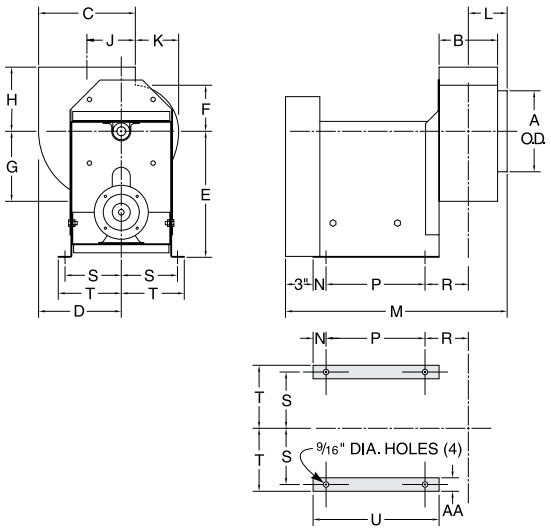

HFS-1310 HFS-1315 HFS-1415 HFS-1420

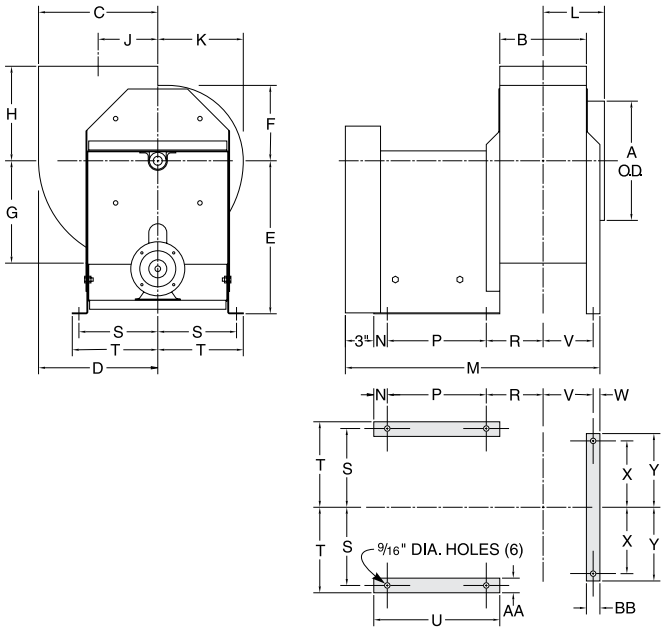

	A	B	C	D	E	F	G	H	J	K	L	M	N	P	R	S	T	U	V	W	X	Y	AA.	BB
HFS-0902	9	6½	10¾	9 3/16	14	5⅛	7¾	6⅞	3 13/16	6⅜	4 5/16	24⅝	1½	11	4 13/16	6¼	7	14	--	--	--	--	1⅞	--
HFS-0903	9	6½	10¾	9 3/16	14	5⅛	7¾	6⅞	3 13/16	6⅜	4 5/16	24⅝	1½	11	4 13/16	6¼	7	14	--	--	--	--	1⅞	--
HFS-0905	9	6½	10¾	9 3/16	14	5⅛	7¾	6⅞	3 13/16	6⅜	4 5/16	24⅝	1½	11	4 13/16	6¼	7	14	--	--	--	--	1⅞	--
HFS-1007	10	8	11¾	10 11/16	14	6 5/16	9 3/16	8⅛	4 13/16	7 11/16	5⅛	26 7/32	1½	11	5 19/32	7¼	7 13/16	14	--	--	--	--	1½	--
HFS-1310	13¼	9⅝	13¼	13¼	17	8⅜	11½	10½	6⅝	9⅞	6⅜	28 11/32	1½	11	6 15/32	8¾	9½	14	5⅝	22/32	7⅜	8 3/16	1⅝	1½
HFS-1315	13¼	9⅝	13¼	13¼	17	8⅜	11½	10½	6⅝	9⅞	6⅜	28 11/32	1½	11	6 15/32	8¾	9½	14	5⅝	22/32	7⅜	8 3/16	1⅝	1½
HFS-1420	14½	10¾	14⅝	14⅝	17	9⅜	12¾	11⅜	7 5/16	11	7	29 7/16	1½	11	6 15/16	9¾	10½	14	6 3/16	13/16	8	8 13/16	1⅝	1½

Fan Accessories

Fan Inlet and Outlet Adapters (Transition Sections)

Fan Inlet and Outlet Adapter (Transition Sections) are available for connection to all Kewaunee V-Belt drive fans. Inlet adapters are sized to connect to 12" dia. ducting from the fume hood on one side, and the fan inlet on the other, making a rigid connection. Outlet adapters are available for connection to 12" dia. stackheads and are sized to fit over the top of the fan outlet. The transition sections are fabricated of 20 gauge cold rolled steel, phosphate coated and have a baked chemical resistant, synthetic resin finish.

Inlet Adapter

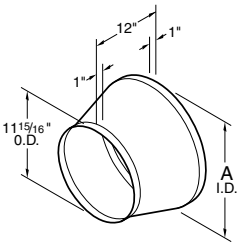

Inlet Adapter	Fan Catalog Number	Dimension A
HIAM121209N	HFS-0902 HFS-0903 HFS-0905	9 1/16"
HIAM121210N	HFS-1007	10 1/16"
HIAM121213N	HFS-1310 HFS-1315	13 5/16"
HIAM121214N	HFS-1420	14 9/16"

Outlet Adapter

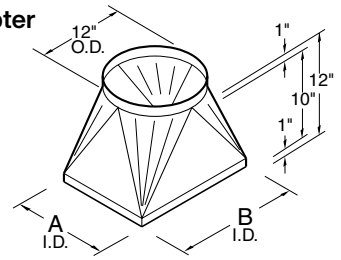

Outlet Adapter	Fan Catalog Number	Dimensions	
		A	B
HOAM121211N	HFS-0902 HFS-0903 HFS-0905	6 9/16"	10 13/16"
HOAM121212N	HFS-1007	8 1/16"	11 13/16"
HOAM121213N	HFS-1310 HFS-1315	9 11/16"	13 5/16"
HOAM121214N	HFS-1420	10 13/16"	14 11/16"

Vertical Exhaust Duct Stackhead Assembly

Vertical Exhaust Duct Stackhead Assemblies provide rain cap protection and reduce the possibility of cross contaminating building air and/or auxiliary air intakes by directing air upward instead of downward. These assemblies have the added advantage of little or no pressure loss through them.

Each assembly consists of a vertical discharge cap and transition section that fits over the rectangular exhaust fan outlet. The parts are fabricated of cold rolled steel, phosphate coated with baked chemical resistant, synthetic resin finish, or type 316 stainless steel.

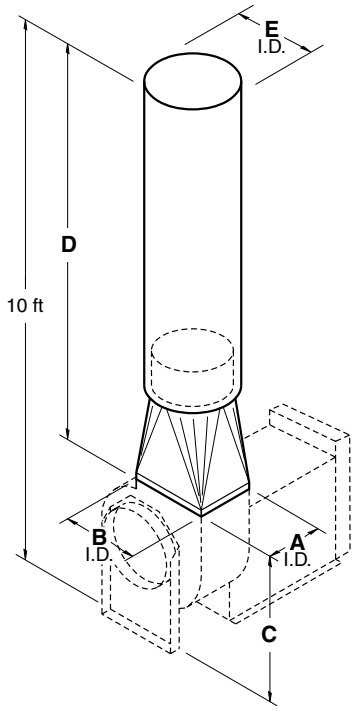

Cold Rolled Steel Stackhead	Stainless Steel Stackhead	Fan Catalog Number	Dimensions				
			A	B	C	D	E
HESM121109N	HESS121109N	HFS-0902 HFS-0903 HFS-0905	6 9/16"	10 13/16"	20 7/8"	99 1/8"	9"
HESM101211N	HESS101211N	HFS-1007	8 1/16"	11 13/16"	22 1/8"	97 7/8"	11"
HESM051313N	HESS051313N	HFS-1310 HFS-1315	9 11/16"	13 5/16"	27 1/2"	92 1/2"	13"
HESM041514N	HESS041514N	HFS-1420	10 13/16"	14 11/16"	28 3/4"	91 1/4"	14"

Full-Jet Spray Nozzle Assembly

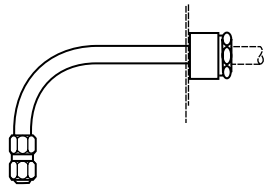

Designed for exhaust ducts on fume hood exhaust systems that need wash downs after use. Made of type 316 stainless steel, the assembly consists of a spray nozzle, piping to the centerline of the duct, and an exterior duct coupling. The nozzle is rated for 1.4 GPM at 20 psi.

0869-10 for 10" diameter Duct
0869-12 for 12" diameter Duct

KEWAUNEE

Recommended Fume Hood Work Practices

A Safe, Healthy Work Environment

Most people think of a scientific laboratory as a clean, safe place to work. But for the people who work there every day, the typical laboratory—filled with flammable and toxic chemicals, harmful vapors, gases and corrosive acids—can be an extremely hazardous place.

By containing harmful contaminants and venting them out of the work area, laboratory fume hoods help create and maintain a safe, healthy environment for you—the laboratory worker—and your co-workers.

Your fume hood is designed to protect you by providing an enclosed work area that has an air barrier between you and the harmful materials you work with. Behind this protective air barrier, the hood's directional air flow carries harmful contaminants away from you toward the rear of the hood. Also, the properly tuned hood and its exhaust system dilutes the contaminants with large volumes of air and safely exhausts them.

If anything interferes with the protective air barrier or the fume hood or disrupts the proper air flow, the hood's ability to protect you and your co-workers may be seriously reduced.

Since 1906, we at Kewaunee Scientific Corporation have been designing and building laboratory fume hoods to help keep laboratory work environments safe and healthy. Based on our knowledge and experience, we've outlined a number of basic safety practices for you and your co-workers to follow when choosing, using and maintaining laboratory fume hoods. The following practices are based on the superior design found in Kewaunee Supreme Air hoods.

We urge you to familiarize yourself with the recommended fume hood work practices on these pages and, even more important, to make a habit of applying them every day. We think you'll agree—it's the best way to help ensure a safe, healthy work area for you and your co-workers.

The Right Fume Hood for the Job

If your laboratory fume hood is to properly protect you, it must be designed for the type of work you're doing.

For example, if you work with radioisotopes, carcinogens or other toxic materials for which decontamination is important, you should always use a hood with a non-absorbent lining that is designed to be easily decontaminated.

If you work with large volumes of flammable substances, you may need a hood equipped with such features as a non-absorbent lining, explosion-proof lights and electrical receptacles, a fire-suppression system, and a spark-resistant exhaust fan.

If you use perchloric acid heated above ambient temperature then you need a hood and exhaust system specifically designed for this hazard.

To be sure your fume hood is the right one for the work you're doing, contact your local Kewaunee sales representative.

Checking Fume Hood Performance

To confirm that your fume hood exhaust system is working properly, you should equip the hood with an air flow monitor. Inspect both the monitor and the system periodically for malfunctions.

For some applications a pressure gauge (e.g. No. 844 Inclined Manometer) connected to the exhaust duct is sufficient. The safe pressure range should be marked on the gauge. When using more hazardous contaminants, a fume hood alarm such as the Kewaunee Air Alert 300 or Digital Face Velocity Alarms should be used. These alarms provide both a visual and audible warning when the exhaust flow becomes unsafe.

If your hood is equipped with a variable air volume controller (VAV) with alarm capabilities, then an additional alarm is not necessary.

You should have a qualified technician thoroughly test your fume hood before you use it the first time and at least once a year after that. You should also have your hood tested after any modification to the laboratory ventilation system or other factors which may affect hood exhaust capability or room air flow patterns.

Kewaunee Supreme Air hoods are provided with one of three baffle configurations: fixed, internally adjustable, or internal single point adjustable.

On the fixed baffle configuration the size of the slots in the baffle are optimized to provide the best performance for general purpose use. On the adjustable baffle options the size of the slots in the baffle can be adjusted to provide control over the air flow patterns within the hood. In the internally adjustable baffles the size of the upper and lower slots is adjusted by moving baffle strips. In the internal remote adjustable baffle option, an adjustment knob rotates a damper behind the lower rear baffle to change the relative size of the slots.

In most uses of the hood, the

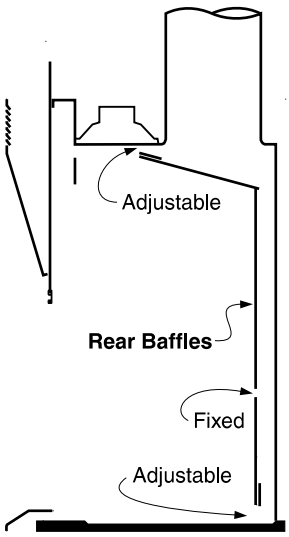

Figure 1. *Rear Baffle Arrangements for Internally Adjustable Baffles*

Recommended Work Practices (continued)

Checking Fume Hood Performance (continued)

contaminants quickly mix with air to form mixtures which have almost the same density as air. In these cases, baffle position **A (Figure 2)** gives the best performance as it provides good flow in both the lower and upper parts of the hood work area.

When a large hot plate is used in the hood, the heat will cause the contaminants to rise within the hood. Baffle position **B (Figure 2)** allows for more air to be exhausted from the upper part of the work area and gives the best containment in this instance.

If large volumes of very dense vapors are given off in the hood they will tend to sink within the hood. In this case, the amount of air drawn through the lower work area should be increased by using baffle position **C (Figure 2)**.

Before setting up apparatus in the hood verify that the baffle setting is correct for the procedure to be performed.

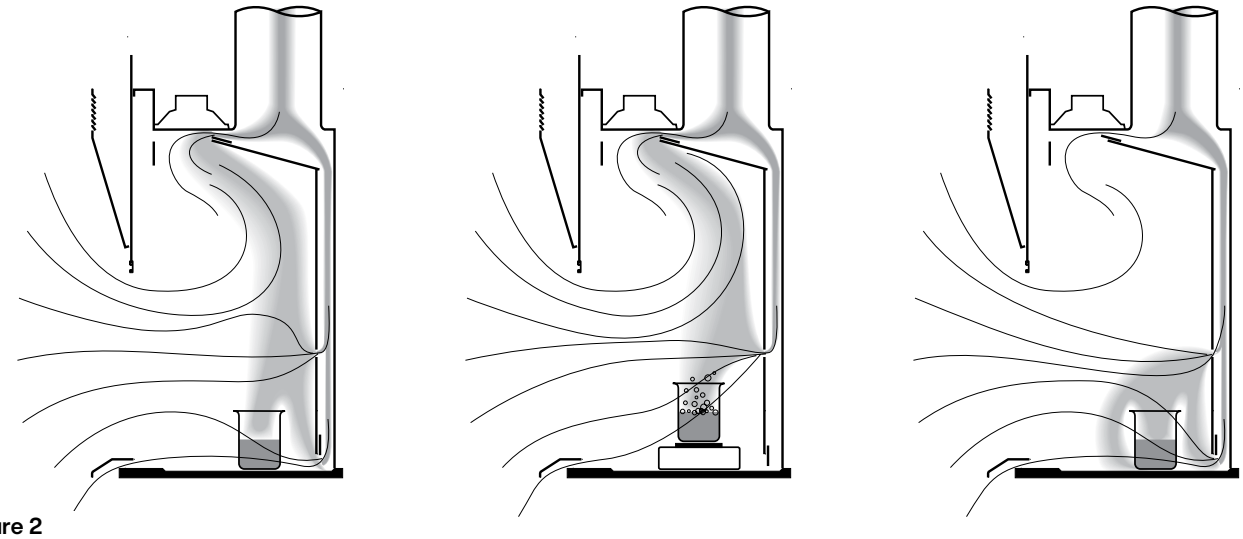

Figure 2

Position **A**
Slot Adjustment for Normal Operation

Position **B**
Slot Adjustment for Large Hot Plates

Position **C**
Slot Adjustment for Heavy Gases and Vapors

Maintaining the Protective Air Barrier for a Safe Work Area

When you stand in front of a laboratory fume hood, the air passing your body to enter the hood forms a zone of low air pressure directly in front of you which extends into the hood for about four inches. Since contaminants may enter this turbulent area from inside the hood, you should keep all hazardous materials at least six inches inside the hood, behind the protective air barrier. **(See Figure 3.)**

The farther behind the fume hood protective air barrier you place the source of contaminants, the greater the protection the hood provides you. Therefore, you should place the equipment and contaminants you're using as far back inside the hood as you can, being careful not to block the lower slot in the rear baffle. **(See Figure 4.)** You should never place apparatus so far back that you have to put your head into the hood while your procedure is generating contaminants.

Large containers or equipment such as

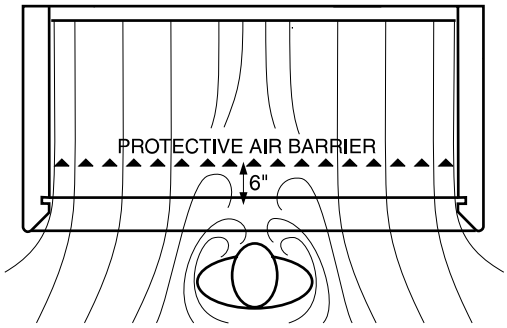

Figure 3

Formation of Protective Air Barrier

Recommended Work Practices (continued)

Maintaining the Protective Air Barrier for a Safe Work Area (continued)

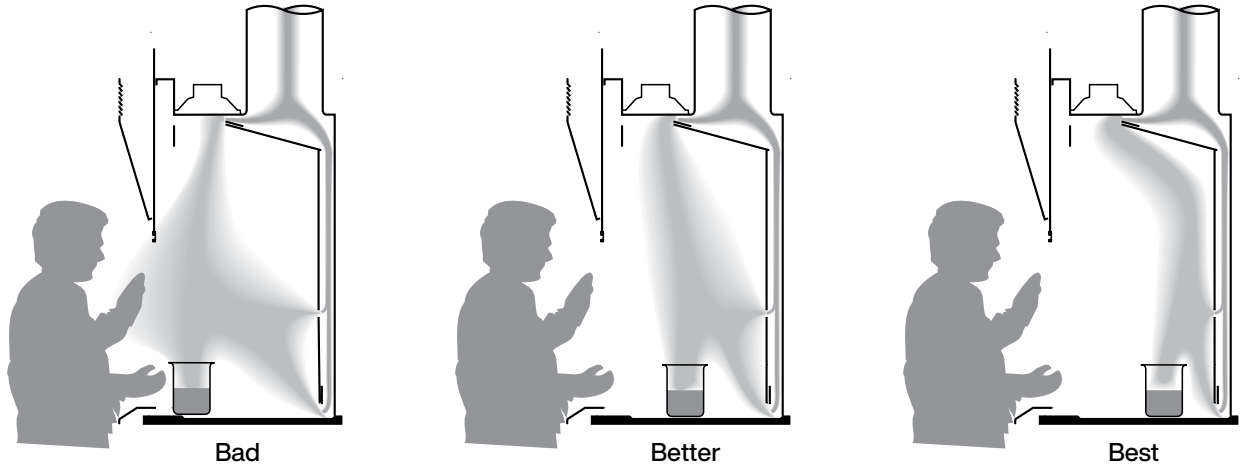

Figure 4
Effect of placement of contaminate source

furnaces, incubators and oil baths often interfere with air flow inside the fume hood by causing reverse flows and dead spots which may allow contaminants to escape from the hood. Putting large, bulky equipment you are using on legs will help reduce reverse air flows by allowing air to circulate beneath the equipment. **(See Figure 5.)**

The fume hood should not be used for storage of chemicals and apparatus. You should remove all but the containers and equipment you're actually using from the hood.

The air velocities used to provide containment in fume hoods are relatively low (in the range of 100 feet per minute) and the air flow patterns are easily disrupted. You should avoid making rapid movements while working at the hood or walking past the hood.

When you're working at your fume hood, you should always open the sash only as far as you need to for access to your work area.

The lowered sash increases the distance **(D in Figure 6)** between your breathing zone and the area where contaminants may escape. Also, the smaller hood face area makes the hood less susceptible to room drafts and other external air disturbances.

The sash also protects you by replacing part of the protective air barrier with a solid barrier against contaminants and splashing chemicals.

The lowered sash however, could create another problem because contaminants

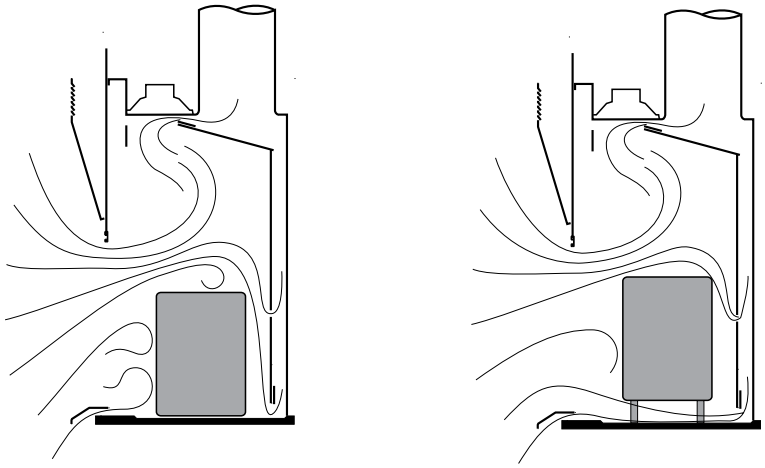

Figure 5
Effect of large equipment

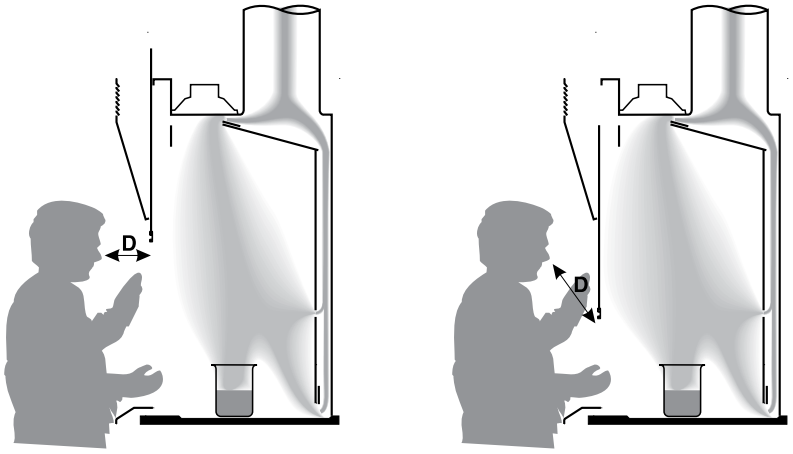

Figure 6
Effect of lowering the sash

Recommended Work Practices (continued)

Maintaining the Protective Air Barrier for a Safe Work Area (continued)

are present in the area behind the sash and may lead to increased corrosion of equipment in the hood. With a lowered sash, it is important for the operator to wear gloves when skin contact with airborne contaminants is objectionable.

If your hood has horizontal sashes, be sure they're all in place when you're working with contaminants inside the hood. Operating the hood with any of the sashes removed reduces the protection they provide by decreasing the velocity of the air entering the hood face. If you remove any hood sashes while setting up equipment, be sure to replace them before beginning the actual procedure.

If the hood has a sash stop with manual override to limit sash travel or is marked for a safe sash height, then the sash should not be raised above this point while contaminants are being generated within the hood.

If you don't need continuous access to the equipment inside the fume hood, you should close the sash completely. **(See Figure 7.)** The closed sash will protect you from the flying debris of a small explosion or runaway reaction. It will eliminate the effects of room drafts or other adverse air currents.

You should note, however, that keeping the sash closed can lead to increased corrosion of equipment inside the hood because any contaminants will be dispersed throughout the hood interior.

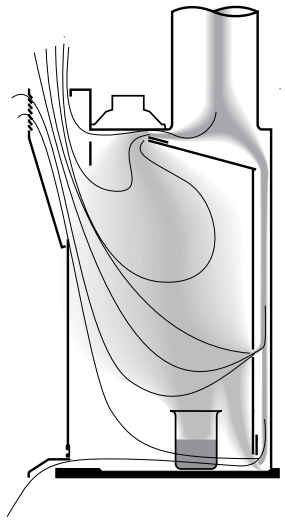

Figure 7 *Airflow through By-Pass with Sash Closed*

Fume Hood Safety Checklist

- ☐ The hood is the correct type for the work to be performed.
- ☐ The flow monitoring device indicates adequate air flow.
- ☐ The baffle setting is correct for the intended use.
- ☐ There are no unnecessary chemicals in the hood.
- ☐ All equipment is at least six inches behind the hood face.
- ☐ All procedures are performed with the laboratory worker's head remaining outside the hood.
- ☐ Equipment with large flat surfaces parallel to the hood face is placed on stands with legs.
- ☐ The sash is lowered to the minimum possible height.
- ☐ All safety equipment is close to the hood in case of fire or explosion.
- ☐ All laboratory workers are following the procedures outlined in this booklet, as well as any additional fume hood safety guidelines supplied by the hood manufacturer.

For More Information

We at Kewaunee Scientific hope these guidelines will be helpful to you as you choose, use and maintain your laboratory fume hood. If you have questions we haven't answered in this section, please contact your local Kewaunee sales representative.

KEWAUNEE

Glossary of Hood Terms and Definitions

Access opening part of the fume hood or glove box through which work is performed - entrance.

ACGIH American Conference of Government Industrial Hygienists.

Air foil curved or angular member at front of hood designed to reduce air turbulence.

Air volume quantity of air normally expressed in cubic feet per minute (cfm).

Arrangement No. 9 fan configuration in which the motor is mounted outboard of the impeller shaft support frame.

Anemometer instrument for measuring low air velocities.

ASHRAE American Society of Heating, Refrigerating and Air Conditioning Engineers.

Auxiliary air air delivered directly to fume hood to reduce room air consumption — sometimes called supply or supplemental air.

Backward Inclined Blade Fan fan with large flat blades with the tips inclined away from the direction of rotation. Most suitable for highly corrosive applications. Recommended for most hood exhaust applications.

Baffle panel or panels located at rear of the hood interior which aid in distributing the flow pattern of air into and through the hood.

By-pass hood hood which contains a by-pass and, usually, air foils — also called a constant volume hood.

Centrifugal Fans fan having a scroll-type housing and air flows perpendicular to the shaft on which the impeller wheel is mounted.

CFM cubic feet per minute — unit of air volume measurement.

Cross draft a flow of air that blows into or across the hood face.

Damper device installed in duct to control air volume — can either be pneumatically, electrically, or manually operated.

Differential Pressure difference in static pressure between two locations.

Duct round, square or rectangular tube used to enclose moving air.

Duct velocity speed of air moving in duct (measured in FPM).

Dynamic barrier by-pass a louvered front-to-back by-pass system located above the top sash that introduces by-pass air behind the operating sash plane to provide a buffer zone between the contaminated hood interior and the hood operator.

Face front opening of hood through which the user works.

Face velocity speed of air moving into fume hood at face opening usually expressed in units of feet per minute.

Fan air moving device consisting of a motor, impeller and housing – sometimes called a blower.

Forward Inclined Blade Fan fan with small, curved blades with the tips inclined in the direction of rotation. Best suited for less corrosive applications and auxiliary air supply.

FPM Feet per minute; measurement of air velocity.

Fume hood a ventilated, enclosed work space, with an open front, intended to capture, contain and exhaust airborne contaminants generated within it — also called a laboratory hood.

Included Angle angle formed by and between two intersecting straight lines.

Kem-FP Coating a fluoropolymer resin coating that exhibits outstanding chemical resistance. Is virtually unaffected by all commonly used corrosive chemicals.

Glossary of Hood Terms and Definitions

Liner material used in the interior of the hood which is exposed to contaminants.

Louvered panel a panel with louvers to allow by-pass air to enter the hood when the sash is closed.

Make-up air free or available air needed to permit fume hood to develop face velocity.

Manometer device used to measure air pressure differential — usually calibrated in inches of water.

Negative Pressure pressures lower than atmospheric pressure. (Less than one atmosphere.)

NFPA National Fire Protection Association.

Perchloric Acid a colorless, syrupy hygroscopic liquid, $HClO_4$, used chiefly as a reagent in analytical chemistry. Explosively unstable when crystallize or when in contact with combustible materials at elevated temperatures.

Pitot tube device for measuring velocity of air in a duct.

Positive pressure pressures higher than atmospheric pressure. (More than one atmosphere.)

Restricted by-pass fume hood basic type of hood design with limited by-pass area. Commonly used in conjunction with "VAV" Variable Air Volume controls.

Safety shield horizontal sliding transparent panel at face of hood which the user places in front of his body to protect himself from small explosions inside of hood.

Sash movable panel set in hood face, usually transparent and can be either vertical rising or horizontal sliding.

Side walls (End walls) The area between the interior hood liner, and the exterior end panel. (4" nominal dimension)

Smoke candle device producing large quantities of smoke for testing hoods — also called smoke bomb.

Static pressure air pressure exerted perpendicular to the direction of flow, usually expressed in units of inches of water.

Superstructure part of hood assembly that excludes worktop, base cabinets, auxiliary air chamber, and plumbing and electrical fixtures.

Supplemental (supply) air air delivered directly to fume hood to reduce room air consumption — also called auxiliary air.

V-Belt Drive Fan fan on which the motor is connected to the impeller wheel via, a v-belt, sheaves, and an impeller wheel shaft. Allows the impeller wheel speed to be varied by using a adjustable motor sheave.

Variable air volume (VAV) type of fume hood that utilizes controller to maintain constant face velocity by adjusting blower motor speed or balance damper in response to changes in sash position.

Velocity speed of air — measured in feet per minute.

Walk-in hood floor-mounted, full height hood designed to accommodate tall apparatus and permit roll-in of instruments and equipment.

KEWAUNEE

Typical Fume Hood Installations

Fume Hood Testing Facilities

Kewaunee's State-Of-The-Art
Fume Hood Testing Facility.
Statesville, North Carolina

Testing Protocols and Standards

ASHRAE 110 – 1995

ANSI / AIHA Z 9.5

EN 14175 – 3
(European Fume Hood Standard)

HAM (Human as Mannequin)
variant of **ASHRAE 110**
(USEPA & UCal–Davis)

Guffey, Flanagan, and **Van Belle**
(Aug 2001 AIHA Journal) "twister" test

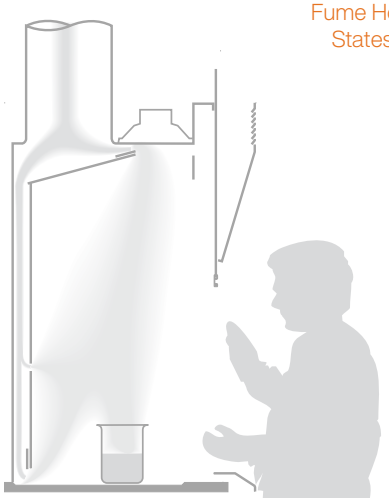

Our state-of-the-art testing facility is capable of duplicating most laboratory environments. It allows us to perform the rigorous testing protocols necessary to ensure safe performance of custom designs.

SUPREME AIR

Laboratory Fume Hoods

Kewaunee Scientific Corporation is dedicated to manufacturing high quality products for the laboratory marketplace. We offer **Total Laboratory Solutions, Innovative Designs, and Technological Expertise** with a worldwide distribution network to provide laboratories that are truly World Class.

Laboratory Products from Kewaunee®:

ALPHA® – Adaptable Casework System

ALPHA Columns – Expandable Workstations

ALPHA Overhead Carrier Systems

BasikBench® – Simple 4-Leg Benches or Tables

Element Bench – Efficient Benches with Plumbed Posts

Enterprise® – Free-Standing Workstations

Evolution® – Column Based Workstations

Kemresin® – Epoxy Resin Counters & Sinks

Kewaunee Matrix® – Educational Stations

Research Collection® – Steel Casework

Signature® Series – Wood Casework

Supreme Air® – Fume Hoods

For our complete product offering, specifications, catalogs, brochures, case studies, and dealer list, go to kewaunee.com, or contact your local sales representative directly.

Kewaunee Scientific Corporation
P.O. Box 1842 ▪ Statesville, NC 28687-1842
704-873-7202 ▪ kscmarketing@kewaunee.com ▪ kewaunee.com

Kewaunee Labway India Pvt. Ltd.
No. CA-9A, 2nd Floor, Jigani Link Road
Jigani, Bangalore 562 106, India
Phone: 9180-27826725 ▪ Fax: 9180-27826724
Web Site: kewaunee.in

Kewaunee Labway Asia Pte. Ltd.
194 Pandan Loop, #06-22
Pantech Business Hub, Singapore 128 383
Phone: 65-6773-0288 ▪ Fax: 65-6773-2322

Kewaunee, Alpha, BasikBench, Enterprise, Evolution, Kemresin, Kewaunee Matrix, Research Collection, Signature, and Supreme Air are registered trademarks of Kewaunee Scientific Corporation

KEWAUNEE®

© Copyright 2026

Digital Version 07/22/26