EVOLUTION

Column Systems

KEWAUNEE®

EVOLUTION

Column Based Workstations

- Infinitely height adjustable work surfaces and shelving
- Starter and add-on assemblies; single and double-sided
- Laminates, edge-grain maple, phenolic resin and Kemresin work surfaces available
- UL listed, column mount power bars with power switch and built-in circuit breaker
- Power, data, and service fixtures mountable in columns with pre-wired and pre-piped options
- Storage options include mobile, suspended, freestanding, and overhead
- Meets SEFA 10, Adaptable Casework Systems, Class 7 (freestanding) and Class 8 (mobile) standards

Contents

Evolution Workstations 4
9" Column Modules 8
12" Column Modules 12
Work Tops 16
Corner Modules 18
Columns 20
Shelving 21
Mobile Floor Shelving 27
Lighting 28
Power Bar 29
Privacy Panels 30
Bin Bar 31
LCD Monitor Arms 32
Service Fittings 33
Upper Storage Cabinets 39
Adjustabench 50
Ceiling Service Panels 52
Technical Information 56
Typical Installations 64

Kewaunee's Evolution is a free standing workstation system that is designed to meet the changing needs of today's Laboratory and Technical environments. The column based design offers infinite height adjustment of the work surface and shelving; as well as other column mounted accessories. Its modular design and ability to share columns helps control cost and simplifies lab layout. Three standard column heights create platforms with and without an above counter support structure. Evolution is available pre-piped and pre-wired and easily incorporates with overhead utility grids or service carriers and panels. Evolution is designed for mobile, suspended, free-standing, and overhead storage.

KEWAUNEE

Evolution Workstation Part Numbers

Workstation Part Number Explanation

FV 11 M 84 24 36 - MG

System Type
FV = Evolution

Column Type
10 = Single-sided Starter 9" Column
11 = Single-sided Add-on 9" Column
20 = Double-sided Starter 9" Column
21 = Double-sided Add-on 9" Column
30 = Single-sided Starter 12" Column
31 = Single-sided Add-on 12" Column
40 = Double-sided Starter 12" Column
41 = Double-sided Add-on 12" Column

Material
M = Metal (powder coated steel & aluminum)
R = Kemresin } Work Top Materials
T = Phenolic Resin } Work Top Materials

Column Height
Standard Heights: 36" – 54" – 84"

Work Top Depth
Standard Depths: 24" – 30" – 36"
Double-sided workstations use two work tops back-to-back
Double-sided Overall Depth = Standard Depth x 2

Work Top Length
Standard Lengths: 24" - 30" - 36" - 42" - 48"
54" - 60" - 66" - 72" - 78" - 84" - 90" - 96"

Separator

Options (see below)

Workstation Options

FV 11 M 84 24 36 - M G

Accent Strip Option
M = Powder Coated Steel Accent Strip

Column Foot Options
G = 1½" Diameter Leveling Glide
C = 4" Swivel Locking Caster
H = 4" Heavy Duty Leveling Caster

Load Ratings — Assembly Load Maximums

Single-sided – 9" Column Workstation

Workstation on Glides or Heavy Duty Leveling Casters: 1,200lbs
Workstation on Swivel Casters: 800lbs
Work Surface Frame: 750lbs
(includes work surface and suspended storage)
Shelving: (each) 250lbs

Double-sided – 9" Column Workstation

Workstation on Glides or Heavy Duty Leveling Casters: 2,000lbs
Workstation on Swivel Casters: 1200lbs
Work Surface Frame: (each side) 500lbs
(includes work surface and suspended storage)
Shelving: (each) 250lbs

Single-sided – 12" Column Workstation

Workstation on Glides or Heavy Duty Leveling Casters: 1,750lbs
Workstation on Swivel Casters: 800lbs
Work Surface Frame: 1000lbs
(includes work surface and suspended storage)
Shelving: (each) 250lbs

Double-sided – 12" Column Workstation

Workstation on Glides or Heavy Duty Leveling Casters: 2,500lbs
Workstation on Swivel Casters: 1200lbs
Work Surface Frame: (each side) 600lbs
(includes work surface and suspended storage)
Shelving: (each) 250lbs

Typical Evolution Workstation

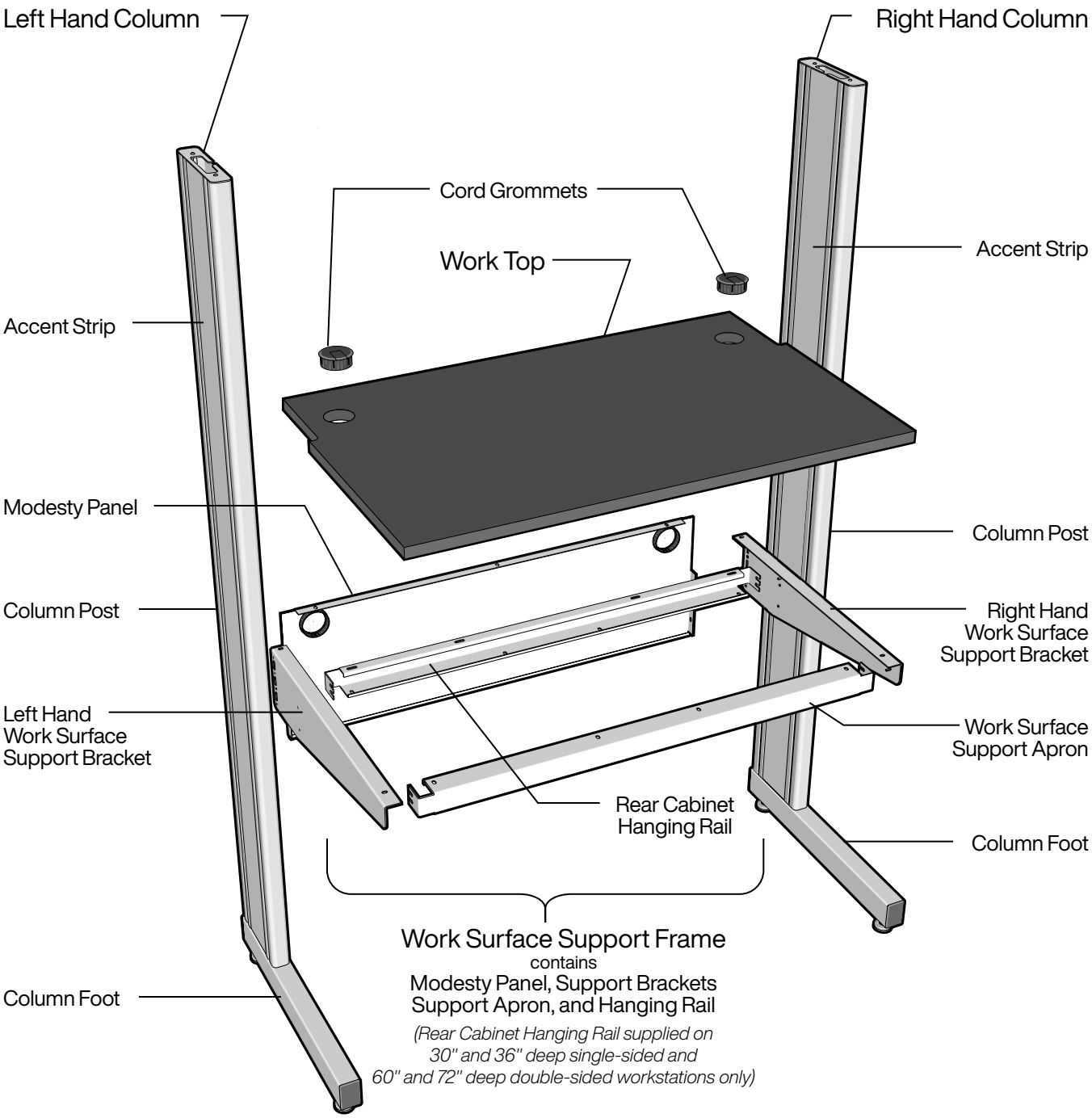

KEWAUNEE

Evolution Work Top Material Options

Kemresin®

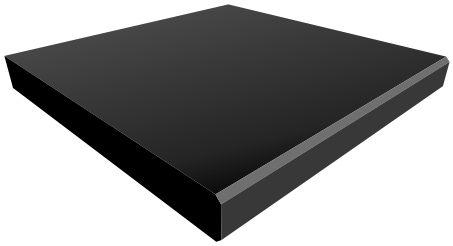

Edge Treatment:
Chamfered front edge, finished square ends and back.

Appearance: Ultra-smooth non-porous surface.

Standard Colors: Black, Grey, Putty, Slate

Composition: 1" thick molded epoxy resin.

Physical Properties: Excellent resistance to practically all acids, alkalies and solvents. Highly resistant to heat and normal physical abuse.

Applications: Use wherever optimum physical and chemical resisting properties are required.

Phenolic Resin

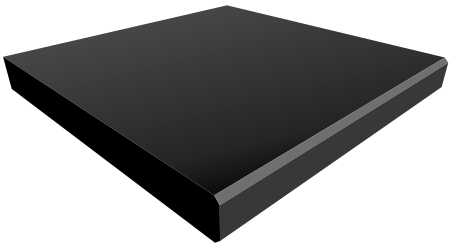

Edge Treatment:
Chamfered front edge, finished square ends and back.

Appearance: Hard, smooth, non-glare surface

Standard Colors: Black
Other colors available on request.

Composition: Cellulose fiber reinforced phenolic resin core with a polyurethane copolymer surface.

Physical Properties: Good chemical resistance to wide range of acids, alkalies and solvents.

Applications: Use wherever a high degree of chemical resistance is required.

Evolution Column Options

Column Accent Strip Option 2

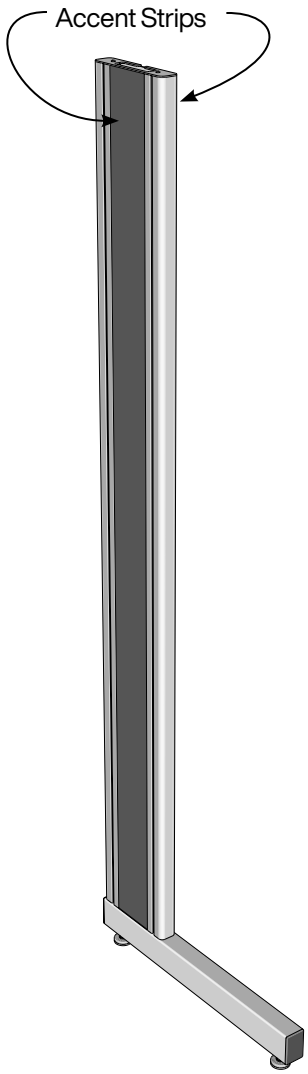

Workstation Support Columns are furnished with two accent strips, one on each side of the column. Accent strips are Powder Coated Steel in colors to either match or accent the Workstation color.

Powder Coated Steel Accent Strip

Required for columns with fittings or fixtures.

Standard Colors: *All Standard Kewaunee Steel Finish Colors*

Column Foot Options

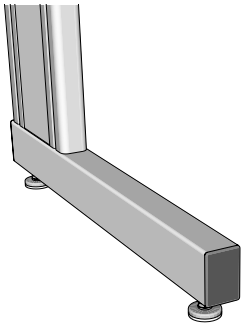

1½" Diameter Glide

Overall Height: 1"
Load Rating: 500lbs each

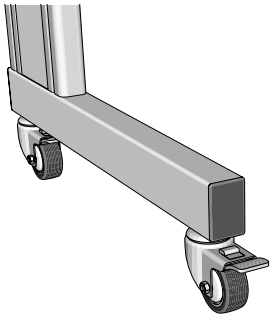

Swivel Locking Caster

Overall Height: 4"
Load Rating: 200lbs each

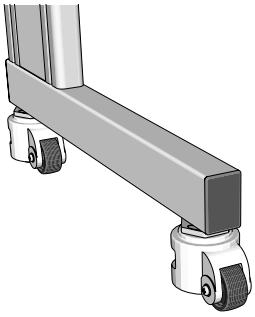

Heavy Duty Leveling Caster

Overall Height: 4"
Load Rating: 500lbs each

KEWAUNEE

Single-sided – 9" Column Modules

Single-sided 9" Column Modules are available in three heights; 36", 54", and 84", three depths; 24", 30" and 36", and in lengths as shown — in both starter assemblies and add-on assemblies. Starter assemblies consist of two columns, a work surface support frame, and all required hardware. Add-on assemblies consist of one column, a work surface support frame, and all required hardware. Workstation modules ship knocked-down for assembly in the field.

Work Tops must be specified separately. (see page 14)

36" High – 24" Deep

Starter		Add-on	
FV10M362424-_ _	24"L	FV11M362424-_ _	24"L
FV10M362430-_ _	30"L	FV11M362430-_ _	30"L
FV10M362436-_ _	36"L	FV11M362436-_ _	36"L
FV10M362442-_ _	42"L	FV11M362442-_ _	42"L
FV10M362448-_ _	48"L	FV11M362448-_ _	48"L
FV10M362454-_ _	54"L	FV11M362454-_ _	54"L
FV10M362460-_ _	60"L	FV11M362460-_ _	60"L
FV10M362466-_ _	66"L	FV11M362466-_ _	66"L
FV10M362472-_ _	72"L	FV11M362472-_ _	72"L
FV10M362478-_ _	78"L	FV11M362478-_ _	78"L
FV10M362484-_ _	84"L	FV11M362484-_ _	84"L
FV10M362490-_ _	90"L	FV11M362490-_ _	90"L
FV10M362496-_ _	96"L	FV11M362496-_ _	96"L

36" High – 30" Deep

Starter		Add-on	
FV10M363024-_ _	24"L	FV11M363024-_ _	24"L
FV10M363030-_ _	30"L	FV11M363030-_ _	30"L
FV10M363036-_ _	36"L	FV11M363036-_ _	36"L
FV10M363042-_ _	42"L	FV11M363042-_ _	42"L
FV10M363048-_ _	48"L	FV11M363048-_ _	48"L
FV10M363054-_ _	54"L	FV11M363054-_ _	54"L
FV10M363060-_ _	60"L	FV11M363060-_ _	60"L
FV10M363066-_ _	66"L	FV11M363066-_ _	66"L
FV10M363072-_ _	72"L	FV11M363072-_ _	72"L
FV10M363078-_ _	78"L	FV11M363078-_ _	78"L
FV10M363084-_ _	84"L	FV11M363084-_ _	84"L
FV10M363090-_ _	90"L	FV11M363090-_ _	90"L
FV10M363096-_ _	96"L	FV11M363096-_ _	96"L

54" High – 24 " Deep

Starter		Add-on	
FV10M542424-_ _	24"L	FV11M542424-_ _	24"L
FV10M542430-_ _	30"L	FV11M542430-_ _	30"L
FV10M542436-_ _	36"L	FV11M542436-_ _	36"L
FV10M542442-_ _	42"L	FV11M542442-_ _	42"L
FV10M542448-_ _	48"L	FV11M542448-_ _	48"L
FV10M542454-_ _	54"L	FV11M542454-_ _	54"L
FV10M542460-_ _	60"L	FV11M542460-_ _	60"L
FV10M542466-_ _	66"L	FV11M542466-_ _	66"L
FV10M542472-_ _	72"L	FV11M542472-_ _	72"L
FV10M542478-_ _	78"L	FV11M542478-_ _	78"L
FV10M542484-_ _	84"L	FV11M542484-_ _	84"L
FV10M542490-_ _	90"L	FV11M542490-_ _	90"L
FV10M542496-_ _	96"L	FV11M542496-_ _	96"L

54" High – 30" Deep

Starter		Add-on	
FV10M543024-_ _	24"L	FV11M543024-_ _	24"L
FV10M543030-_ _	30"L	FV11M543030-_ _	30"L
FV10M543036-_ _	36"L	FV11M543036-_ _	36"L
FV10M543042-_ _	42"L	FV11M543042-_ _	42"L
FV10M543048-_ _	48"L	FV11M543048-_ _	48"L
FV10M543054-_ _	54"L	FV11M543054-_ _	54"L
FV10M543060-_ _	60"L	FV11M543060-_ _	60"L
FV10M543066-_ _	66"L	FV11M543066-_ _	66"L
FV10M543072-_ _	72"L	FV11M543072-_ _	72"L
FV10M543078-_ _	78"L	FV11M543078-_ _	78"L
FV10M543084-_ _	84"L	FV11M543084-_ _	84"L
FV10M543090-_ _	90"L	FV11M543090-_ _	90"L
FV10M543096-_ _	96"L	FV11M543096-_ _	96"L

84" High – 24" Deep

Starter		Add-on	
FV10M842424-_ _	24"L	FV11M842424-_ _	24"L
FV10M842430-_ _	30"L	FV11M842430-_ _	30"L
FV10M842436-_ _	36"L	FV11M842436-_ _	36"L
FV10M842442-_ _	42"L	FV11M842442-_ _	42"L
FV10M842448-_ _	48"L	FV11M842448-_ _	48"L
FV10M842454-_ _	54"L	FV11M842454-_ _	54"L
FV10M842460-_ _	60"L	FV11M842460-_ _	60"L
FV10M842466-_ _	66"L	FV11M842466-_ _	66"L
FV10M842472-_ _	72"L	FV11M842472-_ _	72"L
FV10M842478-_ _	78"L	FV11M842478-_ _	78"L
FV10M842484-_ _	84"L	FV11M842484-_ _	84"L
FV10M842490-_ _	90"L	FV11M842490-_ _	90"L
FV10M842496-_ _	96"L	FV11M842496-_ _	96"L

84" High – 30" Deep

Starter		Add-on	
FV10M843024-_ _	24"L	FV11M843024-_ _	24"L
FV10M843030-_ _	30"L	FV11M843030-_ _	30"L
FV10M843036-_ _	36"L	FV11M843036-_ _	36"L
FV10M843042-_ _	42"L	FV11M843042-_ _	42"L
FV10M843048-_ _	48"L	FV11M843048-_ _	48"L
FV10M843054-_ _	54"L	FV11M843054-_ _	54"L
FV10M843060-_ _	60"L	FV11M843060-_ _	60"L
FV10M843066-_ _	66"L	FV11M843066-_ _	66"L
FV10M843072-_ _	72"L	FV11M843072-_ _	72"L
FV10M843078-_ _	78"L	FV11M843078-_ _	78"L
FV10M843084-_ _	84"L	FV11M843084-_ _	84"L
FV10M843090-_ _	90"L	FV11M843090-_ _	90"L
FV10M843096-_ _	96"L	FV11M843096-_ _	96"L

Single-sided – 9" Column Modules

Module Options:
The two final digits in the part numbers specifies the Accent Strip Material option and the Column Foot option for the workstation.

Accent Strip Material Option:
M = Powder Coated Steel Panel

Example: FV10M362424-**MG** =

Column Foot Options:
G = 1½" Leveling Glide
C = 4" Swivel Locking Caster
H = 4" Heavy Duty Leveling Caster
with Laminate Accent Strip and Glides

36" High – 36" Deep

36"High

Starter		Add-on	
FV10M363624-_ _	24"L	**FV11M363624-_ _**	24"L
FV10M363630-_ _	30"L	**FV11M363630-_ _**	30"L
FV10M363636-_ _	36"L	**FV11M363636-_ _**	36"L
FV10M363642-_ _	42"L	**FV11M363642-_ _**	42"L
FV10M363648-_ _	48"L	**FV11M363648-_ _**	48"L
FV10M363654-_ _	54"L	**FV11M363654-_ _**	54"L
FV10M363660-_ _	60"L	**FV11M363660-_ _**	60"L
FV10M363666-_ _	66"L	**FV11M363666-_ _**	66"L
FV10M363672-_ _	72"L	**FV11M363672-_ _**	72"L
FV10M363678-_ _	78"L	**FV11M363678-_ _**	78"L
FV10M363684-_ _	84"L	**FV11M363684-_ _**	84"L
FV10M363690-_ _	90"L	**FV11M363690-_ _**	90"L
FV10M363696-_ _	96"L	**FV11M363696-_ _**	96"L

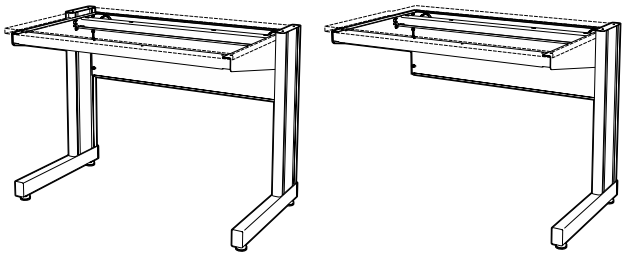

54" High – 36 " Deep

54" High

Starter		Add-on	
FV10M543624-_ _	24"L	**FV11M543624-_ _**	24"L
FV10M543630-_ _	30"L	**FV11M543630-_ _**	30"L
FV10M543636-_ _	36"L	**FV11M543636-_ _**	36"L
FV10M543642-_ _	42"L	**FV11M543642-_ _**	42"L
FV10M543648-_ _	48"L	**FV11M543648-_ _**	48"L
FV10M543654-_ _	54"L	**FV11M543654-_ _**	54"L
FV10M543660-_ _	60"L	**FV11M543660-_ _**	60"L
FV10M543666-_ _	66"L	**FV11M543666-_ _**	66"L
FV10M543672-_ _	72"L	**FV11M543672-_ _**	72"L
FV10M543678-_ _	78"L	**FV11M543678-_ _**	78"L
FV10M543684-_ _	84"L	**FV11M543684-_ _**	84"L
FV10M543690-_ _	90"L	**FV11M543690-_ _**	90"L
FV10M543696-_ _	96"L	**FV11M543696-_ _**	96"L

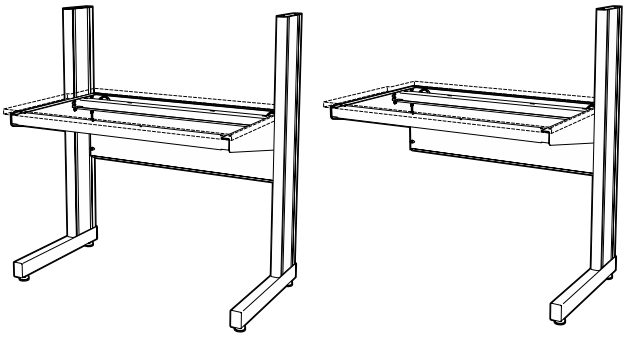

84" High – 36" Deep

84" High

Starter		Add-on	
FV10M843624-_ _	24"L	**FV11M843624-_ _**	24"L
FV10M843630-_ _	30"L	**FV11M843630-_ _**	30"L
FV10M843636-_ _	36"L	**FV11M843636-_ _**	36"L
FV10M843642-_ _	42"L	**FV11M843642-_ _**	42"L
FV10M843648-_ _	48"L	**FV11M843648-_ _**	48"L
FV10M843654-_ _	54"L	**FV11M843654-_ _**	54"L
FV10M843660-_ _	60"L	**FV11M843660-_ _**	60"L
FV10M843666-_ _	66"L	**FV11M843666-_ _**	66"L
FV10M843672-_ _	72"L	**FV11M843672-_ _**	72"L
FV10M843678-_ _	78"L	**FV11M843678-_ _**	78"L
FV10M843684-_ _	84"L	**FV11M843684-_ _**	84"L
FV10M843690-_ _	90"L	**FV11M843690-_ _**	90"L
FV10M843696-_ _	96"L	**FV11M843696-_ _**	96"L

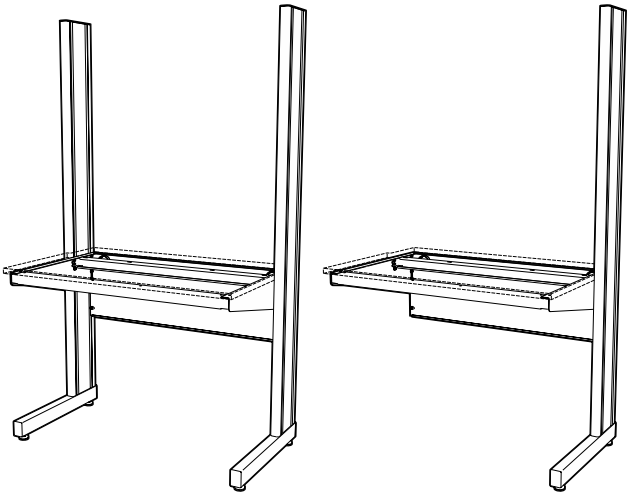

KEWAUNEE

Double-sided – 9" Column Modules

Double-sided 9" Column Modules are available in three heights; 36", 54", and 84", three depths; 48", 60" and 72", and in lengths as shown — in both starter assemblies and add-on assemblies. Starter assemblies consist of two columns, two work surface support frames, and all required hardware.

Add-on assemblies consist of one column, two work surface support frames, and all required hardware. Workstation modules ship knocked-down for assembly in the field.

Work Tops must be specified separately. (see page 14)

36" High – 48" Deep

Starter		Add-on	
FV20M364824-_ _	24"L	FV21M364824-_ _	24"L
FV20M364830-_ _	30"L	FV21M364830-_ _	30"L
FV20M364836-_ _	36"L	FV21M364836-_ _	36"L
FV20M364842-_ _	42"L	FV21M364842-_ _	42"L
FV20M364848-_ _	48"L	FV21M364848-_ _	48"L
FV20M364854-_ _	54"L	FV21M364854-_ _	54"L
FV20M364860-_ _	60"L	FV21M364860-_ _	60"L
FV20M364866-_ _	66"L	FV21M364866-_ _	66"L
FV20M364872-_ _	72"L	FV21M364872-_ _	72"L
FV20M364878-_ _	78"L	FV21M364878-_ _	78"L
FV20M364884-_ _	84"L	FV21M364884-_ _	84"L
FV20M364890-_ _	90"L	FV21M364890-_ _	90"L
FV20M364896-_ _	96"L	FV21M364896-_ _	96"L

36" High – 60" Deep

Starter		Add-on	
FV20M366024-_ _	24"L	FV21M366024-_ _	24"L
FV20M366030-_ _	30"L	FV21M366030-_ _	30"L
FV20M366036-_ _	36"L	FV21M366036-_ _	36"L
FV20M366042-_ _	42"L	FV21M366042-_ _	42"L
FV20M366048-_ _	48"L	FV21M366048-_ _	48"L
FV20M366054-_ _	54"L	FV21M366054-_ _	54"L
FV20M366060-_ _	60"L	FV21M366060-_ _	60"L
FV20M366066-_ _	66"L	FV21M366066-_ _	66"L
FV20M366072-_ _	72"L	FV21M366072-_ _	72"L
FV20M366078-_ _	78"L	FV21M366078-_ _	78"L
FV20M366084-_ _	84"L	FV21M366084-_ _	84"L
FV20M366090-_ _	90"L	FV21M366090-_ _	90"L
FV20M366096-_ _	96"L	FV21M366096-_ _	96"L

54" High – 48" Deep

Starter		Add-on	
FV20M544824-_ _	24"L	FV21M544824-_ _	24"L
FV20M544830-_ _	30"L	FV21M544830-_ _	30"L
FV20M544836-_ _	36"L	FV21M544836-_ _	36"L
FV20M544842-_ _	42"L	FV21M544842-_ _	42"L
FV20M544848-_ _	48"L	FV21M544848-_ _	48"L
FV20M544854-_ _	54"L	FV21M544854-_ _	54"L
FV20M544860-_ _	60"L	FV21M544860-_ _	60"L
FV20M544866-_ _	66"L	FV21M544866-_ _	66"L
FV20M544872-_ _	72"L	FV21M544872-_ _	72"L
FV20M544878-_ _	78"L	FV21M544878-_ _	78"L
FV20M544884-_ _	84"L	FV21M544884-_ _	84"L
FV20M544890-_ _	90"L	FV21M544890-_ _	90"L
FV20M544896-_ _	96"L	FV21M544896-_ _	96"L

54" High – 60" Deep

Starter		Add-on	
FV20M546024-_ _	24"L	FV21M546024-_ _	24"L
FV20M546030-_ _	30"L	FV21M546030-_ _	30"L
FV20M546036-_ _	36"L	FV21M546036-_ _	36"L
FV20M546042-_ _	42"L	FV21M546042-_ _	42"L
FV20M546048-_ _	48"L	FV21M546048-_ _	48"L
FV20M546054-_ _	54"L	FV21M546054-_ _	54"L
FV20M546060-_ _	60"L	FV21M546060-_ _	60"L
FV20M546066-_ _	66"L	FV21M546066-_ _	66"L
FV20M546072-_ _	72"L	FV21M546072-_ _	72"L
FV20M546078-_ _	78"L	FV21M546078-_ _	78"L
FV20M546084-_ _	84"L	FV21M546084-_ _	84"L
FV20M546090-_ _	90"L	FV21M546090-_ _	90"L
FV20M546096-_ _	96"L	FV21M546096-_ _	96"L

84" High – 48" Deep

Starter		Add-on	
FV20M844824-_ _	24"L	FV21M844824-_ _	24"L
FV20M844830-_ _	30"L	FV21M844830-_ _	30"L
FV20M844836-_ _	36"L	FV21M844836-_ _	36"L
FV20M844842-_ _	42"L	FV21M844842-_ _	42"L
FV20M844848-_ _	48"L	FV21M844848-_ _	48"L
FV20M844854-_ _	54"L	FV21M844854-_ _	54"L
FV20M844860-_ _	60"L	FV21M844860-_ _	60"L
FV20M844866-_ _	66"L	FV21M844866-_ _	66"L
FV20M844872-_ _	72"L	FV21M844872-_ _	72"L
FV20M844878-_ _	78"L	FV21M844878-_ _	78"L
FV20M844884-_ _	84"L	FV21M844884-_ _	84"L
FV20M844890-_ _	90"L	FV21M844890-_ _	90"L
FV20M844896-_ _	96"L	FV21M844896-_ _	96"L

84" High – 60" Deep

Starter		Add-on	
FV20M846024-_ _	24"L	FV21M846024-_ _	24"L
FV20M846030-_ _	30"L	FV21M846030-_ _	30"L
FV20M846036-_ _	36"L	FV21M846036-_ _	36"L
FV20M846042-_ _	42"L	FV21M846042-_ _	42"L
FV20M846048-_ _	48"L	FV21M846048-_ _	48"L
FV20M846054-_ _	54"L	FV21M846054-_ _	54"L
FV20M846060-_ _	60"L	FV21M846060-_ _	60"L
FV20M846066-_ _	66"L	FV21M846066-_ _	66"L
FV20M846072-_ _	72"L	FV21M846072-_ _	72"L
FV20M846078-_ _	78"L	FV21M846078-_ _	78"L
FV20M846084-_ _	84"L	FV21M846084-_ _	84"L
FV20M846090-_ _	90"L	FV21M846090-_ _	90"L
FV20M846096-_ _	96"L	FV21M846096-_ _	96"L

Double-sided – 9" Column Modules

Module Options:
The two final digits in the part numbers specifies the Accent Strip Material option and the Column Foot option for the workstation.

Accent Strip Material Options:
M = Powder Coated Steel Panel

Example: FV10M362424-**MG** =

Column Foot Options:
G = 1½" Leveling Glide
C = 4" Swivel Locking Caster
H = 4" Heavy Duty Leveling Caster
with Laminate Accent Strip and Glides

36" High – 72" Deep

36"High

Starter		Add-on	
FV20M367224-_ _	24"L	**FV21M367224-_ _**	24"L
FV20M367230-_ _	30"L	**FV21M367230-_ _**	30"L
FV20M367236-_ _	36"L	**FV21M367236-_ _**	36"L
FV20M367242-_ _	42"L	**FV21M367242-_ _**	42"L
FV20M367248-_ _	48"L	**FV21M367248-_ _**	48"L
FV20M367254-_ _	54"L	**FV21M367254-_ _**	54"L
FV20M367260-_ _	60"L	**FV21M367260-_ _**	60"L
FV20M367266-_ _	66"L	**FV21M367266-_ _**	66"L
FV20M367272-_ _	72"L	**FV21M367272-_ _**	72"L
FV20M367278-_ _	78"L	**FV21M367278-_ _**	78"L
FV20M367284-_ _	84"L	**FV21M367284-_ _**	84"L
FV20M367290-_ _	90"L	**FV21M367290-_ _**	90"L
FV20M367296-_ _	96"L	**FV21M367296-_ _**	96"L

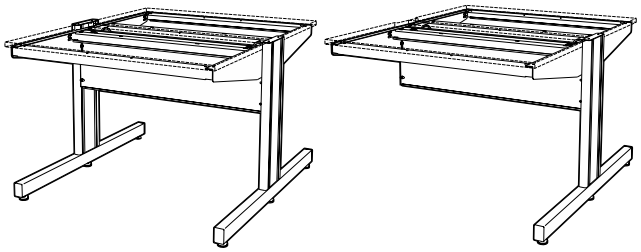

54" High – 72 " Deep

54" High

Starter		Add-on	
FV20M547224-_ _	24"L	**FV21M547224-_ _**	24"L
FV20M547230-_ _	30"L	**FV21M547230-_ _**	30"L
FV20M547236-_ _	36"L	**FV21M547236-_ _**	36"L
FV20M547242-_ _	42"L	**FV21M547242-_ _**	42"L
FV20M547248-_ _	48"L	**FV21M547248-_ _**	48"L
FV20M547254-_ _	54"L	**FV21M547254-_ _**	54"L
FV20M547260-_ _	60"L	**FV21M547260-_ _**	60"L
FV20M547266-_ _	66"L	**FV21M547266-_ _**	66"L
FV20M547272-_ _	72"L	**FV21M547272-_ _**	72"L
FV20M547278-_ _	78"L	**FV21M547278-_ _**	78"L
FV20M547284-_ _	84"L	**FV21M547284-_ _**	84"L
FV20M547290-_ _	90"L	**FV21M547290-_ _**	90"L
FV20M547296-_ _	96"L	**FV21M547296-_ _**	96"L

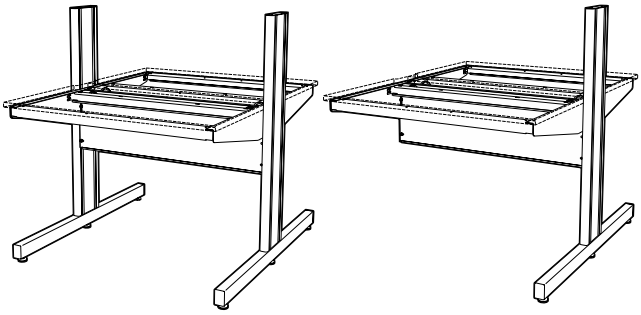

84" High – 72" Deep

84" High

Starter		Add-on	
FV20M847224-_ _	24"L	**FV21M847224-_ _**	24"L
FV20M847230-_ _	30"L	**FV21M847230-_ _**	30"L
FV20M847236-_ _	36"L	**FV21M847236-_ _**	36"L
FV20M847242-_ _	42"L	**FV21M847242-_ _**	42"L
FV20M847248-_ _	48"L	**FV21M847248-_ _**	48"L
FV20M847254-_ _	54"L	**FV21M847254-_ _**	54"L
FV20M847260-_ _	60"L	**FV21M847260-_ _**	60"L
FV20M847266-_ _	66"L	**FV21M847266-_ _**	66"L
FV20M847272-_ _	72"L	**FV21M847272-_ _**	72"L
FV20M847278-_ _	78"L	**FV21M847278-_ _**	78"L
FV20M847284-_ _	84"L	**FV21M847284-_ _**	84"L
FV20M847290-_ _	90"L	**FV21M847290-_ _**	90"L
FV20M847296-_ _	96"L	**FV21M847296-_ _**	96"L

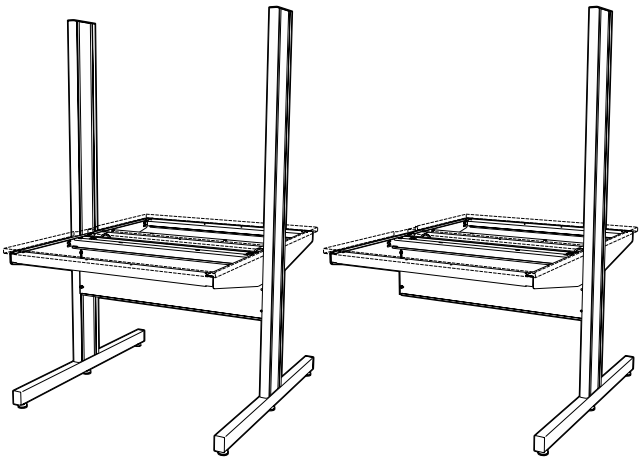

KEWAUNEE

Single-sided – 12" Column Modules

Single-sided 12" Column Modules are available in three heights; 36", 54", and 84", three depths; 24", 30" and 36", and in lengths as shown — in both starter assemblies and add-on assemblies. Starter assemblies consist of two columns, a work surface support frame, and all required hardware. Add-on assemblies consist of one column, a work surface support frame, and all required hardware. Workstation modules ship knocked-down for assembly in the field.

Work Tops must be specified separately. (see page 14)

36" High – 24" Deep

Starter		Add-on	
FV30M362424-_ _	24"L	FV31M362424-_ _	24"L
FV30M362430-_ _	30"L	FV31M362430-_ _	30"L
FV30M362436-_ _	36"L	FV31M362436-_ _	36"L
FV30M362442-_ _	42"L	FV31M362442-_ _	42"L
FV30M362448-_ _	48"L	FV31M362448-_ _	48"L
FV30M362454-_ _	54"L	FV31M362454-_ _	54"L
FV30M362460-_ _	60"L	FV31M362460-_ _	60"L
FV30M362466-_ _	66"L	FV31M362466-_ _	66"L
FV30M362472-_ _	72"L	FV31M362472-_ _	72"L
FV30M362478-_ _	78"L	FV31M362478-_ _	78"L
FV30M362484-_ _	84"L	FV31M362484-_ _	84"L
FV30M362490-_ _	90"L	FV31M362490-_ _	90"L
FV30M362496-_ _	96"L	FV31M362496-_ _	96"L

36" High – 30" Deep

Starter		Add-on	
FV30M363024-_ _	24"L	FV31M363024-_ _	24"L
FV30M363030-_ _	30"L	FV31M363030-_ _	30"L
FV30M363036-_ _	36"L	FV31M363036-_ _	36"L
FV30M363042-_ _	42"L	FV31M363042-_ _	42"L
FV30M363048-_ _	48"L	FV31M363048-_ _	48"L
FV30M363054-_ _	54"L	FV31M363054-_ _	54"L
FV30M363060-_ _	60"L	FV31M363060-_ _	60"L
FV30M363066-_ _	66"L	FV31M363066-_ _	66"L
FV30M363072-_ _	72"L	FV31M363072-_ _	72"L
FV30M363078-_ _	78"L	FV31M363078-_ _	78"L
FV30M363084-_ _	84"L	FV31M363084-_ _	84"L
FV30M363090-_ _	90"L	FV31M363090-_ _	90"L
FV30M363096-_ _	96"L	FV31M363096-_ _	96"L

54" High – 24 " Deep

Starter		Add-on	
FV30M542424-_ _	24"L	FV31M542424-_ _	24"L
FV30M542430-_ _	30"L	FV31M542430-_ _	30"L
FV30M542436-_ _	36"L	FV31M542436-_ _	36"L
FV30M542442-_ _	42"L	FV31M542442-_ _	42"L
FV30M542448-_ _	48"L	FV31M542448-_ _	48"L
FV30M542454-_ _	54"L	FV31M542454-_ _	54"L
FV30M542460-_ _	60"L	FV31M542460-_ _	60"L
FV30M542466-_ _	66"L	FV31M542466-_ _	66"L
FV30M542472-_ _	72"L	FV31M542472-_ _	72"L
FV30M542478-_ _	78"L	FV31M542478-_ _	78"L
FV30M542484-_ _	84"L	FV31M542484-_ _	84"L
FV30M542490-_ _	90"L	FV31M542490-_ _	90"L
FV30M542496-_ _	96"L	FV31M542496-_ _	96"L

54" High – 30" Deep

Starter		Add-on	
FV30M543024-_ _	24"L	FV31M543024-_ _	24"L
FV30M543030-_ _	30"L	FV31M543030-_ _	30"L
FV30M543036-_ _	36"L	FV31M543036-_ _	36"L
FV30M543042-_ _	42"L	FV31M543042-_ _	42"L
FV30M543048-_ _	48"L	FV31M543048-_ _	48"L
FV30M543054-_ _	54"L	FV31M543054-_ _	54"L
FV30M543060-_ _	60"L	FV31M543060-_ _	60"L
FV30M543066-_ _	66"L	FV31M543066-_ _	66"L
FV30M543072-_ _	72"L	FV31M543072-_ _	72"L
FV30M543078-_ _	78"L	FV31M543078-_ _	78"L
FV30M543084-_ _	84"L	FV31M543084-_ _	84"L
FV30M543090-_ _	90"L	FV31M543090-_ _	90"L
FV30M543096-_ _	96"L	FV31M543096-_ _	96"L

84" High – 24" Deep

Starter		Add-on	
FV30M842424-_ _	24"L	FV31M842424-_ _	24"L
FV30M842430-_ _	30"L	FV31M842430-_ _	30"L
FV30M842436-_ _	36"L	FV31M842436-_ _	36"L
FV30M842442-_ _	42"L	FV31M842442-_ _	42"L
FV30M842448-_ _	48"L	FV31M842448-_ _	48"L
FV30M842454-_ _	54"L	FV31M842454-_ _	54"L
FV30M842460-_ _	60"L	FV31M842460-_ _	60"L
FV30M842466-_ _	66"L	FV31M842466-_ _	66"L
FV30M842472-_ _	72"L	FV31M842472-_ _	72"L
FV30M842478-_ _	78"L	FV31M842478-_ _	78"L
FV30M842484-_ _	84"L	FV31M842484-_ _	84"L
FV30M842490-_ _	90"L	FV31M842490-_ _	90"L
FV30M842496-_ _	96"L	FV31M842496-_ _	96"L

84" High – 30" Deep

Starter		Add-on	
FV30M843024-_ _	24"L	FV31M843024-_ _	24"L
FV30M843030-_ _	30"L	FV31M843030-_ _	30"L
FV30M843036-_ _	36"L	FV31M843036-_ _	36"L
FV30M843042-_ _	42"L	FV31M843042-_ _	42"L
FV30M843048-_ _	48"L	FV31M843048-_ _	48"L
FV30M843054-_ _	54"L	FV31M843054-_ _	54"L
FV30M843060-_ _	60"L	FV31M843060-_ _	60"L
FV30M843066-_ _	66"L	FV31M843066-_ _	66"L
FV30M843072-_ _	72"L	FV31M843072-_ _	72"L
FV30M843078-_ _	78"L	FV31M843078-_ _	78"L
FV30M843084-_ _	84"L	FV31M843084-_ _	84"L
FV30M843090-_ _	90"L	FV31M843090-_ _	90"L
FV30M843096-_ _	96"L	FV31M843096-_ _	96"L

Single-sided – 12" Column Modules

Module Options:
The two final digits in the part numbers specifies the Accent Strip Material option and the Column Foot option for the workstation.

Accent Strip Material Options:
M = Powder Coated Steel Panel

Example: FV10M362424-**MG** =

Column Foot Options:
G = 1½" Leveling Glide
C = 4" Swivel Locking Caster
H = 4" Heavy Duty Leveling Caster
with Laminate Accent Strip and Glides

36" High – 36" Deep

36"High

Starter		Add-on	
FV30M363624-_ _	24"L	**FV31M363624-_ _**	24"L
FV30M363630-_ _	30"L	**FV31M363630-_ _**	30"L
FV30M363636-_ _	36"L	**FV31M363636-_ _**	36"L
FV30M363642-_ _	42"L	**FV31M363642-_ _**	42"L
FV30M363648-_ _	48"L	**FV31M363648-_ _**	48"L
FV30M363654-_ _	54"L	**FV31M363654-_ _**	54"L
FV30M363660-_ _	60"L	**FV31M363660-_ _**	60"L
FV30M363666-_ _	66"L	**FV31M363666-_ _**	66"L
FV30M363672-_ _	72"L	**FV31M363672-_ _**	72"L
FV30M363678-_ _	78"L	**FV31M363678-_ _**	78"L
FV30M363684-_ _	84"L	**FV31M363684-_ _**	84"L
FV30M363690-_ _	90"L	**FV31M363690-_ _**	90"L
FV30M363696-_ _	96"L	**FV31M363696-_ _**	96"L

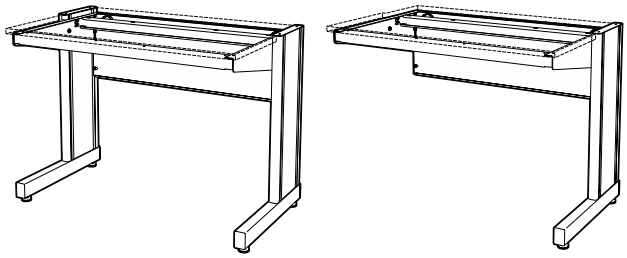

54" High – 36 " Deep

54" High

Starter		Add-on	
FV30M543624-_ _	24"L	**FV31M543624-_ _**	24"L
FV30M543630-_ _	30"L	**FV31M543630-_ _**	30"L
FV30M543636-_ _	36"L	**FV31M543636-_ _**	36"L
FV30M543642-_ _	42"L	**FV31M543642-_ _**	42"L
FV30M543648-_ _	48"L	**FV31M543648-_ _**	48"L
FV30M543654-_ _	54"L	**FV31M543654-_ _**	54"L
FV30M543660-_ _	60"L	**FV31M543660-_ _**	60"L
FV30M543666-_ _	66"L	**FV31M543666-_ _**	66"L
FV30M543672-_ _	72"L	**FV31M543672-_ _**	72"L
FV30M543678-_ _	78"L	**FV31M543678-_ _**	78"L
FV30M543684-_ _	84"L	**FV31M543684-_ _**	84"L
FV30M543690-_ _	90"L	**FV31M543690-_ _**	90"L
FV30M543696-_ _	96"L	**FV31M543696-_ _**	96"L

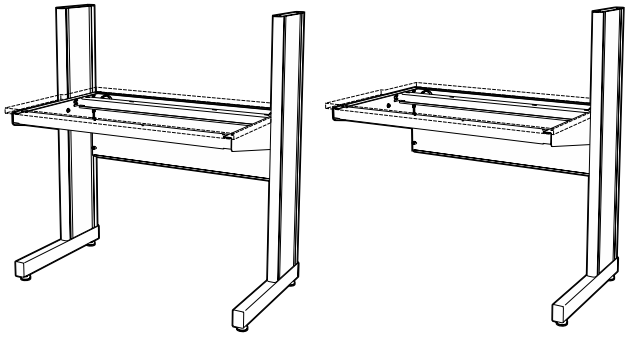

84" High – 36" Deep

84" High

Starter		Add-on	
FV30M843624-_ _	24"L	**FV31M843624-_ _**	24"L
FV30M843630-_ _	30"L	**FV31M843630-_ _**	30"L
FV30M843636-_ _	36"L	**FV31M843636-_ _**	36"L
FV30M843642-_ _	42"L	**FV31M843642-_ _**	42"L
FV30M843648-_ _	48"L	**FV31M843648-_ _**	48"L
FV30M843654-_ _	54"L	**FV31M843654-_ _**	54"L
FV30M843660-_ _	60"L	**FV31M843660-_ _**	60"L
FV30M843666-_ _	66"L	**FV31M843666-_ _**	66"L
FV30M843672-_ _	72"L	**FV31M843672-_ _**	72"L
FV30M843678-_ _	78"L	**FV31M843678-_ _**	78"L
FV30M843684-_ _	84"L	**FV31M843684-_ _**	84"L
FV30M843690-_ _	90"L	**FV31M843690-_ _**	90"L
FV30M843696-_ _	96"L	**FV31M843696-_ _**	96"L

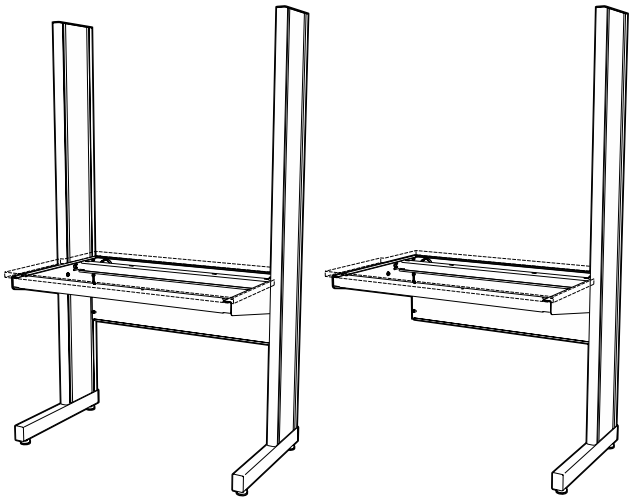

KEWAUNEE

Double-sided – 12" Column Modules

Double-sided 12" Column Workstations are available in three heights; 36", 54", and 84", three depths; 48", 60" and 72", and in lengths as shown — in both starter assemblies and add-on assemblies. Starter assemblies consist of two columns, two work surface support frames, and all required hardware. Add-on assemblies consist of one column, two work surface support frames, and all required hardware. Workstation modules ship knocked-down for assembly in the field.

Work Tops must be specified separately. (see page 14)

36" High – 48" Deep

Starter		Add-on	
FV40M364824-_ _	24"L	FV41M364824-_ _	24"L
FV40M364830-_ _	30"L	FV41M364830-_ _	30"L
FV40M364836-_ _	36"L	FV41M364836-_ _	36"L
FV40M364842-_ _	42"L	FV41M364842-_ _	42"L
FV40M364848-_ _	48"L	FV41M364848-_ _	48"L
FV40M364854-_ _	54"L	FV41M364854-_ _	54"L
FV40M364860-_ _	60"L	FV41M364860-_ _	60"L
FV40M364866-_ _	66"L	FV41M364866-_ _	66"L
FV40M364872-_ _	72"L	FV41M364872-_ _	72"L
FV40M364878-_ _	78"L	FV41M364878-_ _	78"L
FV40M364884-_ _	84"L	FV41M364884-_ _	84"L
FV40M364890-_ _	90"L	FV41M364890-_ _	90"L
FV40M364896-_ _	96"L	FV41M364896-_ _	96"L

36" High – 60" Deep

Starter		Add-on	
FV40M366024-_ _	24"L	FV41M366024-_ _	24"L
FV40M366030-_ _	30"L	FV41M366030-_ _	30"L
FV40M366036-_ _	36"L	FV41M366036-_ _	36"L
FV40M366042-_ _	42"L	FV41M366042-_ _	42"L
FV40M366048-_ _	48"L	FV41M366048-_ _	48"L
FV40M366054-_ _	54"L	FV41M366054-_ _	54"L
FV40M366060-_ _	60"L	FV41M366060-_ _	60"L
FV40M366066-_ _	66"L	FV41M366066-_ _	66"L
FV40M366072-_ _	72"L	FV41M366072-_ _	72"L
FV40M366078-_ _	78"L	FV41M366078-_ _	78"L
FV40M366084-_ _	84"L	FV41M366084-_ _	84"L
FV40M366090-_ _	90"L	FV41M366090-_ _	90"L
FV40M366096-_ _	96"L	FV41M366096-_ _	96"L

54" High – 48" Deep

Starter		Add-on	
FV40M544824-_ _	24"L	FV41M544824-_ _	24"L
FV40M544830-_ _	30"L	FV41M544830-_ _	30"L
FV40M544836-_ _	36"L	FV41M544836-_ _	36"L
FV40M544842-_ _	42"L	FV41M544842-_ _	42"L
FV40M544848-_ _	48"L	FV41M544848-_ _	48"L
FV40M544854-_ _	54"L	FV41M544854-_ _	54"L
FV40M544860-_ _	60"L	FV41M544860-_ _	60"L
FV40M544866-_ _	66"L	FV41M544866-_ _	66"L
FV40M544872-_ _	72"L	FV41M544872-_ _	72"L
FV40M544878-_ _	78"L	FV41M544878-_ _	78"L
FV40M544884-_ _	84"L	FV41M544884-_ _	84"L
FV40M544890-_ _	90"L	FV41M544890-_ _	90"L
FV40M544896-_ _	96"L	FV41M544896-_ _	96"L

54" High – 60" Deep

Starter		Add-on	
FV40M546024-_ _	24"L	FV41M546024-_ _	24"L
FV40M546030-_ _	30"L	FV41M546030-_ _	30"L
FV40M546036-_ _	36"L	FV41M546036-_ _	36"L
FV40M546042-_ _	42"L	FV41M546042-_ _	42"L
FV40M546048-_ _	48"L	FV41M546048-_ _	48"L
FV40M546054-_ _	54"L	FV41M546054-_ _	54"L
FV40M546060-_ _	60"L	FV41M546060-_ _	60"L
FV40M546066-_ _	66"L	FV41M546066-_ _	66"L
FV40M546072-_ _	72"L	FV41M546072-_ _	72"L
FV40M546078-_ _	78"L	FV41M546078-_ _	78"L
FV40M546084-_ _	84"L	FV41M546084-_ _	84"L
FV40M546090-_ _	90"L	FV41M546090-_ _	90"L
FV40M546096-_ _	96"L	FV41M546096-_ _	96"L

84" High – 48" Deep

Starter		Add-on	
FV40M844824-_ _	24"L	FV41M844824-_ _	24"L
FV40M844830-_ _	30"L	FV41M844830-_ _	30"L
FV40M844836-_ _	36"L	FV41M844836-_ _	36"L
FV40M844842-_ _	42"L	FV41M844842-_ _	42"L
FV40M844848-_ _	48"L	FV41M844848-_ _	48"L
FV40M844854-_ _	54"L	FV41M844854-_ _	54"L
FV40M844860-_ _	60"L	FV41M844860-_ _	60"L
FV40M844866-_ _	66"L	FV41M844866-_ _	66"L
FV40M844872-_ _	72"L	FV41M844872-_ _	72"L
FV40M844878-_ _	78"L	FV41M844878-_ _	78"L
FV40M844884-_ _	84"L	FV41M844884-_ _	84"L
FV40M844890-_ _	90"L	FV41M844890-_ _	90"L
FV40M844896-_ _	96"L	FV41M844896-_ _	96"L

84" High – 60" Deep

Starter		Add-on	
FV40M846024-_ _	24"L	FV41M846024-_ _	24"L
FV40M846030-_ _	30"L	FV41M846030-_ _	30"L
FV40M846036-_ _	36"L	FV41M846036-_ _	36"L
FV40M846042-_ _	42"L	FV41M846042-_ _	42"L
FV40M846048-_ _	48"L	FV41M846048-_ _	48"L
FV40M846054-_ _	54"L	FV41M846054-_ _	54"L
FV40M846060-_ _	60"L	FV41M846060-_ _	60"L
FV40M846066-_ _	66"L	FV41M846066-_ _	66"L
FV40M846072-_ _	72"L	FV41M846072-_ _	72"L
FV40M846078-_ _	78"L	FV41M846078-_ _	78"L
FV40M846084-_ _	84"L	FV41M846084-_ _	84"L
FV40M846090-_ _	90"L	FV41M846090-_ _	90"L
FV40M846096-_ _	96"L	FV41M846096-_ _	96"L

Double-sided – 12" Column Modules

Module Options:
The two final digits in the part numbers specifies the Accent Strip Material option and the Column Foot option for the workstation.

Accent Strip Material Options:
M = Powder Coated Steel Panel

Example: FV10M362424-**PG** =

Column Foot Options:
G = 1½" Leveling Glide
C = 4" Swivel Locking Caster
H = 4" Heavy Duty Leveling Caster
with Laminate Accent Strip and Glides

36" High – 72" Deep

36"High

Starter		Add-on	
FV40M367224-_ _	24"L	**FV41M367224-_ _**	24"L
FV40M367230-_ _	30"L	**FV41M367230-_ _**	30"L
FV40M367236-_ _	36"L	**FV41M367236-_ _**	36"L
FV40M367242-_ _	42"L	**FV41M367242-_ _**	42"L
FV40M367248-_ _	48"L	**FV41M367248-_ _**	48"L
FV40M367254-_ _	54"L	**FV41M367254-_ _**	54"L
FV40M367260-_ _	60"L	**FV41M367260-_ _**	60"L
FV40M367266-_ _	66"L	**FV41M367266-_ _**	66"L
FV40M367272-_ _	72"L	**FV41M367272-_ _**	72"L
FV40M367278-_ _	78"L	**FV41M367278-_ _**	78"L
FV40M367284-_ _	84"L	**FV41M367284-_ _**	84"L
FV40M367290-_ _	90"L	**FV41M367290-_ _**	90"L
FV40M367296-_ _	96"L	**FV41M367296-_ _**	96"L

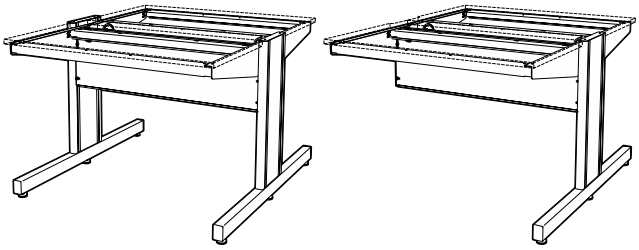

54" High – 72" Deep

54" High

Starter		Add-on	
FV40M547224-_ _	24"L	**FV41M547224-_ _**	24"L
FV40M547230-_ _	30"L	**FV41M547230-_ _**	30"L
FV40M547236-_ _	36"L	**FV41M547236-_ _**	36"L
FV40M547242-_ _	42"L	**FV41M547242-_ _**	42"L
FV40M547248-_ _	48"L	**FV41M547248-_ _**	48"L
FV40M547254-_ _	54"L	**FV41M547254-_ _**	54"L
FV40M547260-_ _	60"L	**FV41M547260-_ _**	60"L
FV40M547266-_ _	66"L	**FV41M547266-_ _**	66"L
FV40M547272-_ _	72"L	**FV41M547272-_ _**	72"L
FV40M547278-_ _	78"L	**FV41M547278-_ _**	78"L
FV40M547284-_ _	84"L	**FV41M547284-_ _**	84"L
FV40M547290-_ _	90"L	**FV41M547290-_ _**	90"L
FV40M547296-_ _	96"L	**FV41M547296-_ _**	96"L

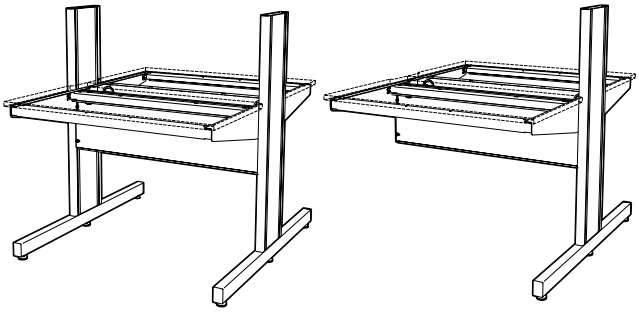

84" High – 72" Deep

84" High

Starter		Add-on	
FV40M847224-_ _	24"L	**FV41M847224-_ _**	24"L
FV40M847230-_ _	30"L	**FV41M847230-_ _**	30"L
FV40M847236-_ _	36"L	**FV41M847236-_ _**	36"L
FV40M847242-_ _	42"L	**FV41M847242-_ _**	42"L
FV40M847248-_ _	48"L	**FV41M847248-_ _**	48"L
FV40M847254-_ _	54"L	**FV41M847254-_ _**	54"L
FV40M847260-_ _	60"L	**FV41M847260-_ _**	60"L
FV40M847266-_ _	66"L	**FV41M847266-_ _**	66"L
FV40M847272-_ _	72"L	**FV41M847272-_ _**	72"L
FV40M847278-_ _	78"L	**FV41M847278-_ _**	78"L
FV40M847284-_ _	84"L	**FV41M847284-_ _**	84"L
FV40M847290-_ _	90"L	**FV41M847290-_ _**	90"L
FV40M847296-_ _	96"L	**FV41M847296-_ _**	96"L

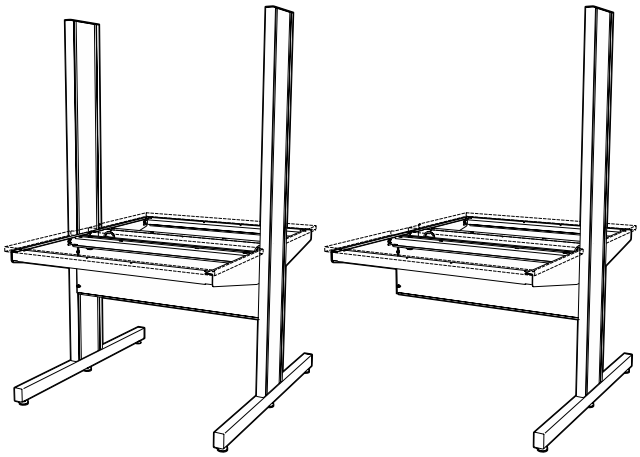

KEWAUNEE

Work Tops

Work Tops are available in two materials, 1" thick and with or without an extra 1" of length on either the left, right, or both ends to extend the length of the top to be even with the outside of the column. See page 4 for available color options.

Work Top Material Codes:

R = Kemresin
T = Phenolic Resin

Example: FV90**R**013060-**R**B
Standard length Kemresin top

Extended Length Option:

_S = Standard Length
_L = Extended on Left End
_R = Extended on Right End
_B = Extended on Both Ends

Example: FV91R016060-R**B**
Work top extended both ends

Work Top for Single-sided 9" Column Workstation

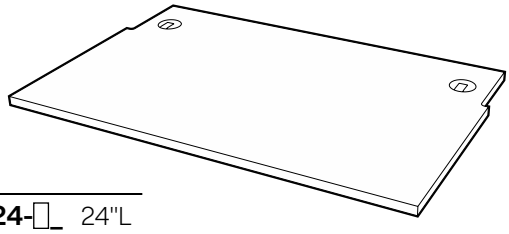

24" Deep		30" Deep		36" Deep	
FV90_012424-_	24"L	**FV90_013024-_**	24"L	**FV90_013624-_**	24"L
FV90_012430-_	30"L	**FV90_013030-_**	30"L	**FV90_013630-_**	30"L
FV90_012436-_	36"L	**FV90_013036-_**	36"L	**FV90_013636-_**	36"L
FV90_012442-_	42"L	**FV90_013042-_**	42"L	**FV90_013642-_**	42"L
FV90_012448-_	48"L	**FV90_013048-_**	48"L	**FV90_013648-_**	48"L
FV90_012454-_	54"L	**FV90_013054-_**	54"L	**FV90_013654-_**	54"L
FV90_012460-_	60"L	**FV90_013060-_**	60"L	**FV90_013660-_**	60"L
FV90_012466-_	66"L	**FV90_013066-_**	66"L	**FV90_013666-_**	66"L
FV90_012472-_	72"L	**FV90_013072-_**	72"L	**FV90_013672-_**	72"L
FV90_012478-_	78"L	**FV90_013078-_**	78"L	**FV90_013678-_**	78"L
FV90_012484-_	84"L	**FV90_013084-_**	84"L	**FV90_013684-_**	84"L
FV90_012490-_	90"L	**FV90_013090-_**	90"L	**FV90_013690-_**	90"L
FV90_012496-_	96"L	**FV90_013096-_**	96"L	**FV90_013696-_**	96"L

Work Top for Double-sided 9" Column Workstation

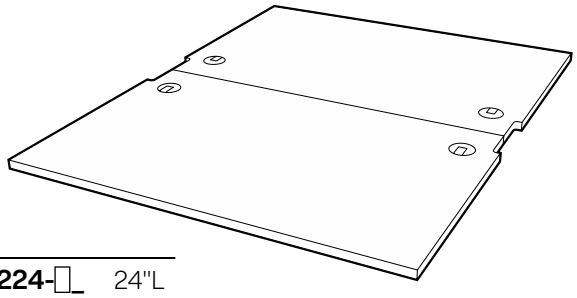

48" Deep		60" Deep		72" Deep	
FV91_014824-_	24"L	**FV91_016024-_**	24"L	**FV91_017224-_**	24"L
FV91_014830-_	30"L	**FV91_016030-_**	30"L	**FV91_017230-_**	30"L
FV91_014836-_	36"L	**FV91_016036-_**	36"L	**FV91_017236-_**	36"L
FV91_014842-_	42"L	**FV91_016042-_**	42"L	**FV91_017242-_**	42"L
FV91_014848-_	48"L	**FV91_016048-_**	48"L	**FV91_017248-_**	48"L
FV91_014854-_	54"L	**FV91_016054-_**	54"L	**FV91_017254-_**	54"L
FV91_014860-_	60"L	**FV91_016060-_**	60"L	**FV91_017260-_**	60"L
FV91_014866-_	66"L	**FV91_016066-_**	66"L	**FV91_017266-_**	66"L
FV91_014872-_	72"L	**FV91_016072-_**	72"L	**FV91_017272-_**	72"L
FV91_014878-_	78"L	**FV91_016078-_**	78"L	**FV91_017278-_**	78"L
FV91_014884-_	84"L	**FV91_016084-_**	84"L	**FV91_017284-_**	84"L
FV91_014890-_	90"L	**FV91_016090-_**	90"L	**FV91_017290-_**	90"L
FV91_014896-_	96"L	**FV91_016096-_**	96"L	**FV91_017296-_**	96"L

Work Tops

Work Tops are available in two materials, 1" thick and with or without an extra 1" of length on either the left, right, or both ends to extend the length of the top to be even with the outside of the column. See page 4 for available color options.

Work Top Material Codes:

R = Kemresin
T = Phenolic Resin

Example: FV92**T**013060-**T**B
Standard length Phenolic Resin top

Extended Length Option:

□**S** = Standard Length
□**L** = Extended on Left End
□**R** = Extended on Right End
□**B** = Extended on Both Ends

Example: FV93T016060-T**B**
Work top extended both ends

Work Top for Single-sided 12" Column Workstation

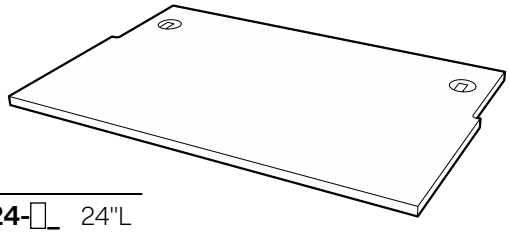

24" Deep		30" Deep		36" Deep	
FV92□012424-□_	24"L	**FV92□013024-□_**	24"L	**FV92□013624-□_**	24"L
FV92□012430-□_	30"L	**FV92□013030-□_**	30"L	**FV92□013630-□_**	30"L
FV92□012436-□_	36"L	**FV92□013036-□_**	36"L	**FV92□013636-□_**	36"L
FV92□012442-□_	42"L	**FV92□013042-□_**	42"L	**FV92□013642-□_**	42"L
FV92□012448-□_	48"L	**FV92□013048-□_**	48"L	**FV92□013648-□_**	48"L
FV92□012454-□_	54"L	**FV92□013054-□_**	54"L	**FV92□013654-□_**	54"L
FV92□012460-□_	60"L	**FV92□013060-□_**	60"L	**FV92□013660-□_**	60"L
FV92□012466-□_	66"L	**FV92□013066-□_**	66"L	**FV92□013666-□_**	66"L
FV92□012472-□_	72"L	**FV92□013072-□_**	72"L	**FV92□013672-□_**	72"L
FV92□012478-□_	78"L	**FV92□013078-□_**	78"L	**FV92□013678-□_**	78"L
FV92□012484-□_	84"L	**FV92□013084-□_**	84"L	**FV92□013684-□_**	84"L
FV92□012490-□_	90"L	**FV92□013090-□_**	90"L	**FV92□013690-□_**	90"L
FV92□012496-□_	96"L	**FV92□013096-□_**	96"L	**FV92□013696-□_**	96"L

Work Top for Double-sided 12" Column Workstation

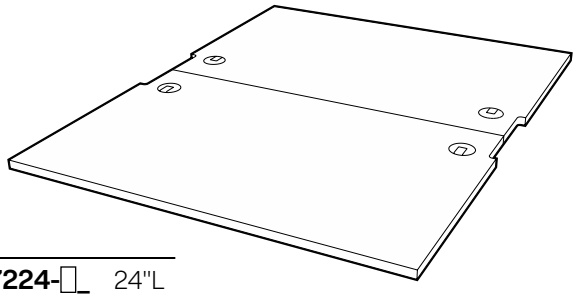

48" Deep		60" Deep		72" Deep	
FV93□014824-□_	24"L	**FV93□016024-□_**	24"L	**FV93□017224-□_**	24"L
FV93□014830-□_	30"L	**FV93□016030-□_**	30"L	**FV93□017230-□_**	30"L
FV93□014836-□_	36"L	**FV93□016036-□_**	36"L	**FV93□017236-□_**	36"L
FV93□014842-□_	42"L	**FV93□016042-□_**	42"L	**FV93□017242-□_**	42"L
FV93□014848-□_	48"L	**FV93□016048-□_**	48"L	**FV93□017248-□_**	48"L
FV93□014854-□_	54"L	**FV93□016054-□_**	54"L	**FV93□017254-□_**	54"L
FV93□014860-□_	60"L	**FV93□016060-□_**	60"L	**FV93□017260-□_**	60"L
FV93□014866-□_	66"L	**FV93□016066-□_**	66"L	**FV93□017266-□_**	66"L
FV93□014872-□_	72"L	**FV93□016072-□_**	72"L	**FV93□017272-□_**	72"L
FV93□014878-□_	78"L	**FV93□016078-□_**	78"L	**FV93□017278-□_**	78"L
FV93□014884-□_	84"L	**FV93□016084-□_**	84"L	**FV93□017284-□_**	84"L
FV93□014890-□_	90"L	**FV93□016090-□_**	90"L	**FV93□017290-□_**	90"L
FV93□014896-□_	96"L	**FV93□016096-□_**	96"L	**FV93□017296-□_**	96"L

KEWAUNEE

Corner Modules – 9" Column

Evolution Corner Modules are designed to be added to two workstation modules to create an "L" shaped assembly. They are available in two different configurations; square or diagonal and in three depths; 24", 30", and 36" to match workstation depths.

Square Corner Support Frames include: two support brackets, and an adjustable height rear corner support leg.

Diagonal Corner Support Frames include: two support brackets, a front apron, two modesty panels, and an adjustable height rear corner support leg.

Work Tops must be specified separately.

Work Tops are available in two materials. See page 4 for available color options.

Work Top Material Codes:

R = Kemresin
T = Phenolic Resin

Example: FV94**R**013032
Square Corner **Kemresin** Work Top

Square Corner Support Frame — 9" Column

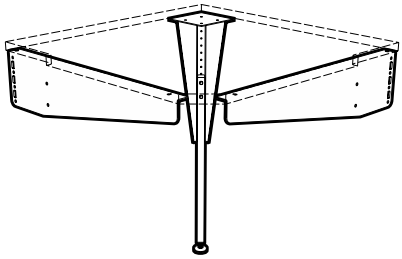

FV14M362426	**24**"D x 26"L
FV14M363032	**30**"D x 32"L
FV14M363638	**36**"D x 38"L

Square Corner Work Top — 9" Column

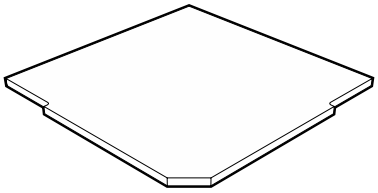

FV94□012426	**24**"D x 26"L
FV94□013032	**30**"D x 32"L
FV94□013638	**36**"D x 38"L

Diagonal Corner Support Frame — 9" Column

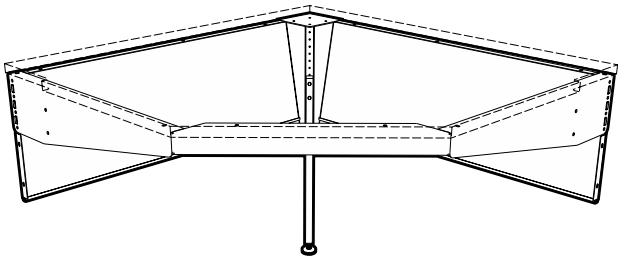

FV15M362440	**24**"D x 40"L
FV15M363046	**30**"D x 46"L
FV15M363652	**36**"D x 52"L

Diagonal Corner Work Top — 9" Column

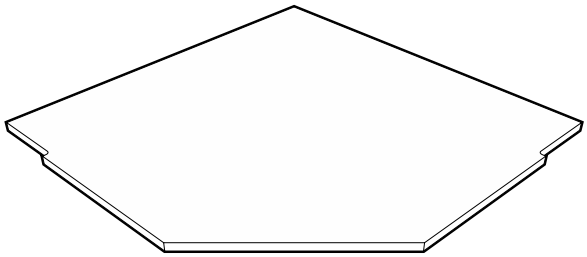

FV95□012440	**24**"D x 40"L
FV95□013046	**30**"D x 46"L
FV95□013652	**36**"D x 52"L

Corner Modules – 12" Column

Evolution Corner Modules are designed to be added to two workstation modules to create an "L" shaped assembly. They are available in two different configurations; square or diagonal and in three depths; 24", 30", and 36" to match workstation depths.

Square Corner Support Frames include: two support brackets, and an adjustable height rear corner support leg.

Diagonal Corner Support Frames include: two support brackets, a front apron, two modesty panels, and an adjustable height rear corner support leg.

Work Tops must be specified separately.

Work Tops are available in two materials. See page 4 for available color options.

Work Top Material Codes:

R = Kemresin
T = Phenolic Resin

Example: FV97**T**013046
Diagonal Corner **Phenolic Resin** Work Top

Square Corner Support Frame — 12" Column

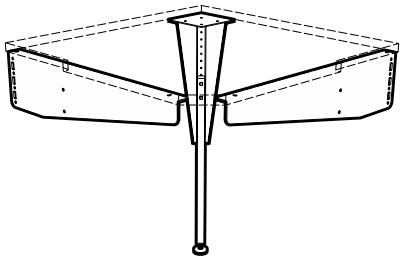

FV34M362426	**24**"D x 26"L
FV34M363032	**30**"D x 32"L
FV34M363638	**36**"D x 38"L

Square Corner Work Top — 12" Column

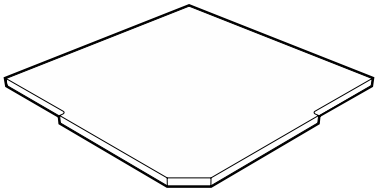

FV96□012426	**24**"D x 26"L
FV96□013032	**30**"D x 32"L
FV96□013638	**36**"D x 38"L

Diagonal Corner Support Frame — 12" Column

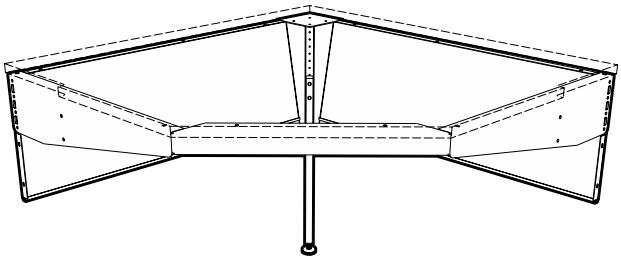

FV35M362440	**24**"D x 40"L
FV35M363046	**30**"D x 46"L
FV35M363652	**36**"D x 52"L

Diagonal Corner Work Top — 12" Column

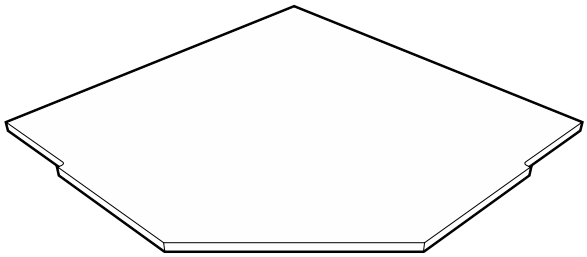

FV97□012440	**24**"D x 40"L
FV97□013046	**30**"D x 46"L
FV97□013652	**36**"D x 52"L

KEWAUNEE

Columns

Columns are available individually for replacement purposes and custom applications.

The two final digits in the part number specifies the Accent Strip Material option and the Foot option for the column.

Accent Strip Material Options:

M = Powder Coated Steel Panel

Workstation Foot Options:

G = 1½" Leveling Glide
C = 4" Swivel Locking Caster
H = 4" Heavy Duty Leveling Caster

Example: FV01M363002-**MG** = with Steel Accent Panel and Glides

9" Single-sided Columns

36" High

FV01M362402-_ _ 24"D
FV01M363002-_ _ 30"D
FV01M363602-_ _ 36"D

54" High

FV01M542402-_ _ 24"D
FV01M543002-_ _ 30"D
FV01M543602-_ _ 36"D

84" High

FV01M842402-_ _ 24"D
FV01M843002-_ _ 30"D
FV01M843602-_ _ 36"D

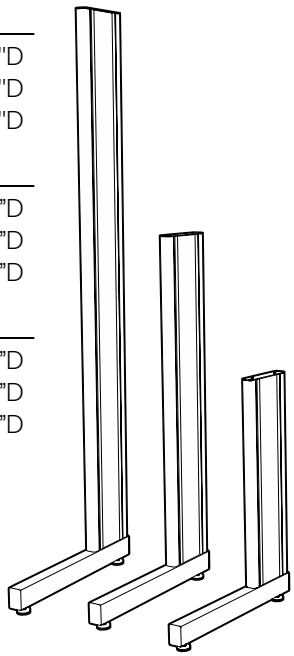

9" Double-sided Columns

36" High

FV02M364802-_ _ 48"D
FV02M366002-_ _ 60"D
FV02M367202-_ _ 72"D

54" High

FV02M544802-_ _ 48"D
FV02M546002-_ _ 60"D
FV02M547202-_ _ 72"D

84" High

FV02M844802-_ _ 48"D
FV02M846002-_ _ 60"D
FV02M847202-_ _ 72"D

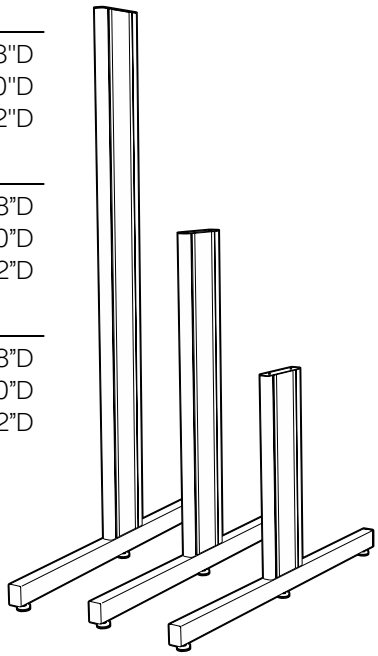

12" Single-sided Columns

36" High

FV03M362402-_ _ 24"D
FV03M363002-_ _ 30"D
FV03M363602-_ _ 36"D

54" High

FV03M542402-_ _ 24"D
FV03M543002-_ _ 30"D
FV03M543602-_ _ 36"D

84" High

FV03M842402-_ _ 24"D
FV03M843002-_ _ 30"D
FV03M843602-_ _ 36"D

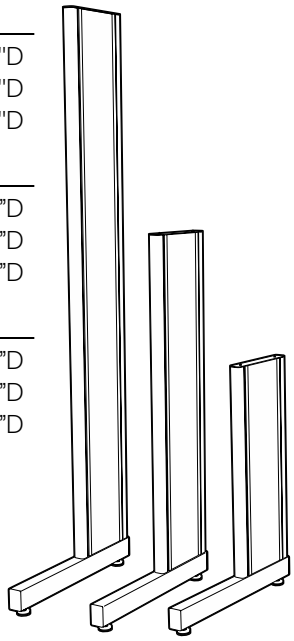

12" Double-sided Columns

36" High

FV04M364802-_ _ 48"D
FV04M366002-_ _ 60"D
FV04M367202-_ _ 72"D

54" High

FV04M544802-_ _ 48"D
FV04M546002-_ _ 60"D
FV04M547202-_ _ 72"D

84" High

FV04M844802-_ _ 48"D
FV04M846002-_ _ 60"D
FV04M847202-_ _ 72"D

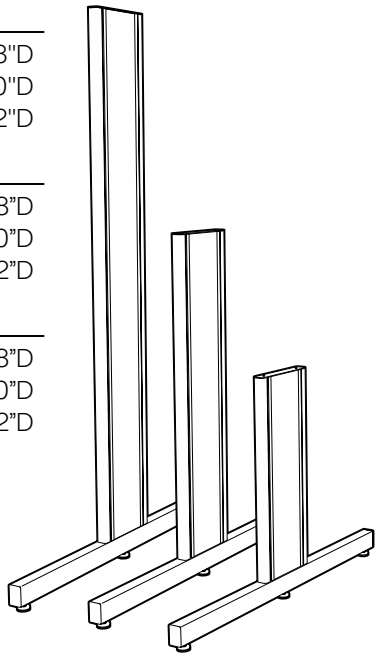

Evolution Shelving

Shelf Assembly Part Number Explanation

FV 60M 031536 - 09,L0

System Type
FV = Evolution

Shelf Type
60 = Single-sided Undermount
62 = Single-sided Bookend
64 = Double-sided Bookend
66 = Center Undermount
68 = Double-sided Undermount

Shelf Material
M = Powder Coated Steel

Shelf Bracket Height
Standard Heights: 2" – 3" – 5"

Shelf Depth
Standard Depths: 12" – 15" – 18" – 24" – 30" – 36"

Shelf Length
Standard Lengths: 24" - 30" - 36" - 42" - 48"
54" - 60" - 66" - 72" - 78" - 84" - 90" - 96"

Options (see below)

Shelf Options

FV 60M 031536 - 09,L0

Column Depth
09 = Shelf for 9" Column
12 = Shelf for 12" Column

Shelf Lip Option
L0 = No Shelf Lips
L1 = One Shelf Lip
L2 = Two Shelf Lips (front & back)
L3 = Three Shelf Lips (for FV66 Center Shelving)

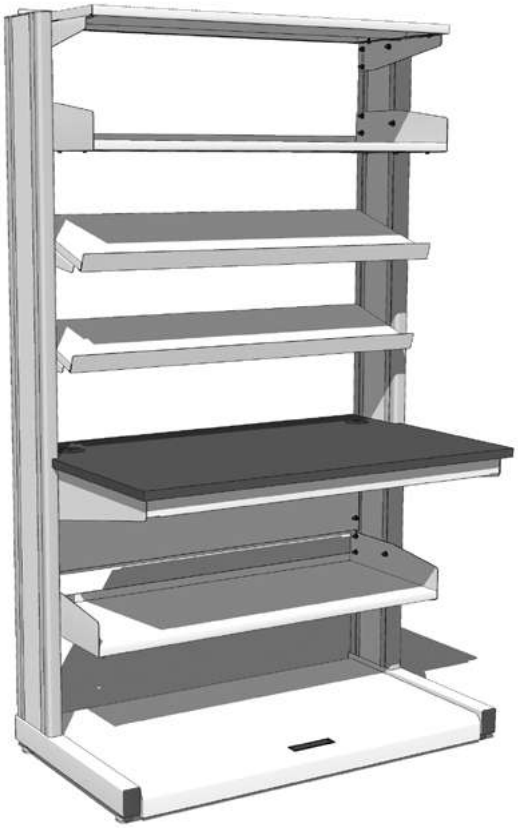

KEWAUNEE

Single-sided Shelving

Single-sided Undermount Shelves consist of a pair of powder coated, 12 gauge steel shelf brackets and a 1" thick, powder coated, 14 gauge steel shelf. Shelves are infinitely height adjustable from above the work surface to the top of the column and have limited mounting below work surface.

Shelves mount flush with the rear of workstation columns and are available with or without retaining lips.

Column Depth Options:

09 = for 9" Deep Columns
12 = for 12" Deep Columns

Shelf Retaining Lip Options:

L0 = No shelf lip
L1 = Shelf Lip on one edge
L2 = Shelf Lip on both edges

Example: FV60M031236-**09L1** = Shelf for 9" Column with Lip on one edge

Single-sided Undermount Shelving

12" Deep	
FV60M031224-____	24"L
FV60M031230-____	30"L
FV60M031236-____	36"L
FV60M031242-____	42"L
FV60M031248-____	48"L
FV60M031254-____	54"L
FV60M031260-____	60"L
FV60M031266-____	66"L
FV60M031272-____	72"L
FV60M031278-____	78"L
FV60M031284-____	84"L
FV60M031290-____	90"L
FV60M031296-____	96"L

15" Deep	
FV60M031524-____	24"L
FV60M031530-____	30"L
FV60M031536-____	36"L
FV60M031542-____	42"L
FV60M031548-____	48"L
FV60M031554-____	54"L
FV60M031560-____	60"L
FV60M031566-____	66"L
FV60M031572-____	72"L
FV60M031578-____	78"L
FV60M031584-____	84"L
FV60M031590-____	90"L
FV60M031596-____	96"L

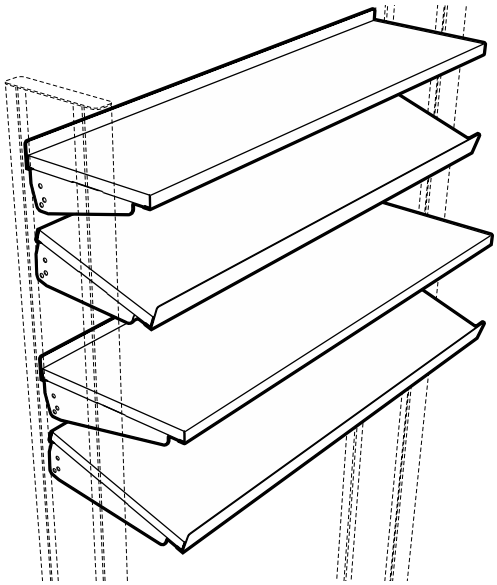

18" Deep	
FV60M031824-____	24"L
FV60M031830-____	30"L
FV60M031836-____	36"L
FV60M031842-____	42"L
FV60M031848-____	48"L
FV60M031854-____	54"L
FV60M031860-____	60"L
FV60M031866-____	66"L
FV60M031872-____	72"L
FV60M031878-____	78"L
FV60M031884-____	84"L
FV60M031890-____	90"L
FV60M031896-____	96"L

24" Deep	
FV60M032424-____	24"L
FV60M032430-____	30"L
FV60M032436-____	36"L
FV60M032442-____	42"L
FV60M032448-____	48"L
FV60M032454-____	54"L
FV60M032460-____	60"L
FV60M032466-____	66"L
FV60M032472-____	72"L
FV60M032478-____	78"L
FV60M032484-____	84"L
FV60M032490-____	90"L
FV60M032496-____	96"L

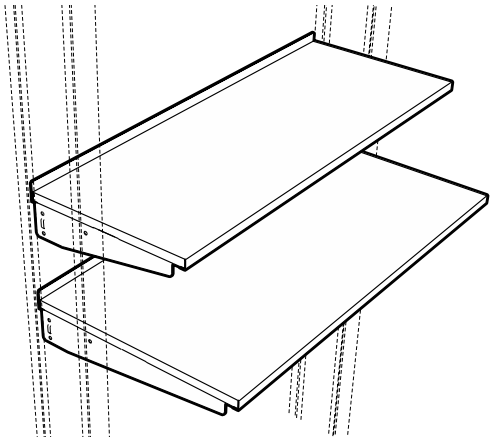

Single-sided Shelving

Single-sided Bookend Shelves consist of a pair of powder coated, 5" high, 12 gauge steel shelf brackets and a 1" thick, powder coated, 14 gauge steel shelf. Shelves are infinitely height adjustable from above the work surface to the top of the column and have limited mounting below work surface.

Shelves mount flush with the rear of workstation columns and are available with or without retaining lips.

Column Depth Options:

09 = for 9" Deep Columns
12 = for 12" Deep Columns

Shelf Retaining Lip Options:

L0 = No shelf lip
L1 = Shelf Lip on one edge
L2 = Shelf Lip on both edges

Example: FV62M051236-**09L2** = Shelf for 9" Column with Lip on both front and back edge.

Single-sided Bookend Shelving

12" Deep		15" Deep	
FV62M051224-____	24"L	**FV62M051524-____**	24"L
FV62M051230-____	30"L	**FV62M051530-____**	30"L
FV62M051236-____	36"L	**FV62M051536-____**	36"L
FV62M051242-____	42"L	**FV62M051542-____**	42"L
FV62M051248-____	48"L	**FV62M051548-____**	48"L
FV62M051254-____	54"L	**FV62M051554-____**	54"L
FV62M051260-____	60"L	**FV62M051560-____**	60"L
FV62M051266-____	66"L	**FV62M051566-____**	66"L
FV62M051272-____	72"L	**FV62M051572-____**	72"L
FV62M051278-____	78"L	**FV62M051578-____**	78"L
FV62M051284-____	84"L	**FV62M051584-____**	84"L
FV62M051290-____	90"L	**FV62M051590-____**	90"L
FV62M051296-____	96"L	**FV62M051596-____**	96"L

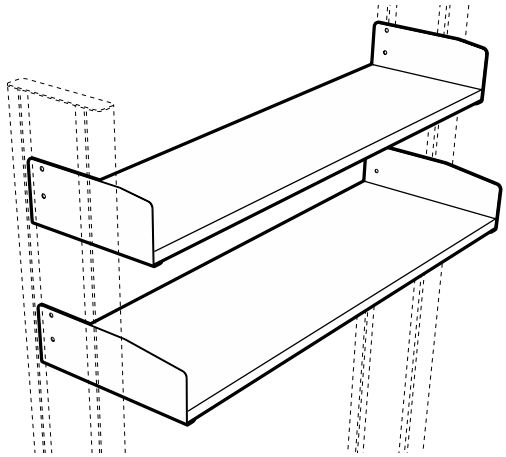

18" Deep		24" Deep	
FV62M051824-____	24"L	**FV62M052424-____**	24"L
FV62M051830-____	30"L	**FV62M052430-____**	30"L
FV62M051836-____	36"L	**FV62M052436-____**	36"L
FV62M051842-____	42"L	**FV62M052442-____**	42"L
FV62M051848-____	48"L	**FV62M052448-____**	48"L
FV62M051854-____	54"L	**FV62M052454-____**	54"L
FV62M051860-____	60"L	**FV62M052460-____**	60"L
FV62M051866-____	66"L	**FV62M052466-____**	66"L
FV62M051872-____	72"L	**FV62M052472-____**	72"L
FV62M051878-____	78"L	**FV62M052478-____**	78"L
FV62M051884-____	84"L	**FV62M052484-____**	84"L
FV62M051890-____	90"L	**FV62M052490-____**	90"L
FV62M051896-____	96"L	**FV62M052496-____**	96"L

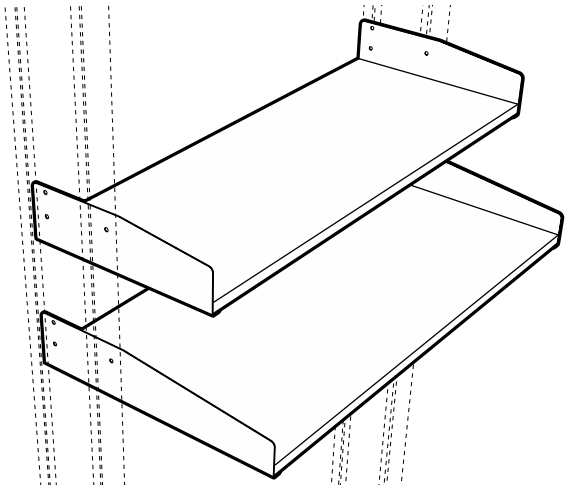

KEWAUNEE

Double-sided Shelving

Double-sided Undermount Shelves consist of a pair of powder coated, 12 gauge steel shelf brackets and a 1" thick, powder coated, 14 gauge steel shelf. Shelves are infinitely height adjustable from above the work surface to the top of the column and have limited mounting below the work surface. The rear edge of the shelf is centered on the workstation column and are available with or without retaining lips.

Column Depth Options:

09 = for 9" Deep Columns
12 = for 12" Deep Columns

Shelf Retaining Lip Options:

L0 = No shelf lip
L1 = Shelf Lip on one edge
L2 = Shelf Lip on both edges

Example: FV68M031236-**12L1** = Shelf for 12" Column with Lip on one edge.

Double-sided Undermount Shelving

12" Deep	
FV68M031224-____	24"L
FV68M031230-____	30"L
FV68M031236-____	36"L
FV68M031242-____	42"L
FV68M031248-____	48"L
FV68M031254-____	54"L
FV68M031260-____	60"L
FV68M031266-____	66"L
FV68M031272-____	72"L
FV68M031278-____	78"L
FV68M031284-____	84"L
FV68M031290-____	90"L
FV68M031296-____	96"L

15" Deep	
FV68M031524-____	24"L
FV68M031530-____	30"L
FV68M031536-____	36"L
FV68M031542-____	42"L
FV68M031548-____	48"L
FV68M031554-____	54"L
FV68M031560-____	60"L
FV68M031566-____	66"L
FV68M031572-____	72"L
FV68M031578-____	78"L
FV68M031584-____	84"L
FV68M031590-____	90"L
FV68M031596-____	96"L

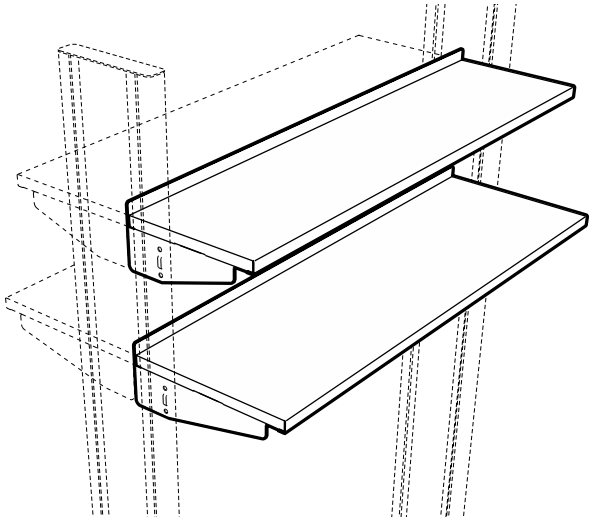

18" Deep	
FV68M031824-____	24"L
FV68M031830-____	30"L
FV68M031836-____	36"L
FV68M031842-____	42"L
FV68M031848-____	48"L
FV68M031854-____	54"L
FV68M031860-____	60"L
FV68M031866-____	66"L
FV68M031872-____	72"L
FV68M031878-____	78"L
FV68M031884-____	84"L
FV68M031890-____	90"L
FV68M031896-____	96"L

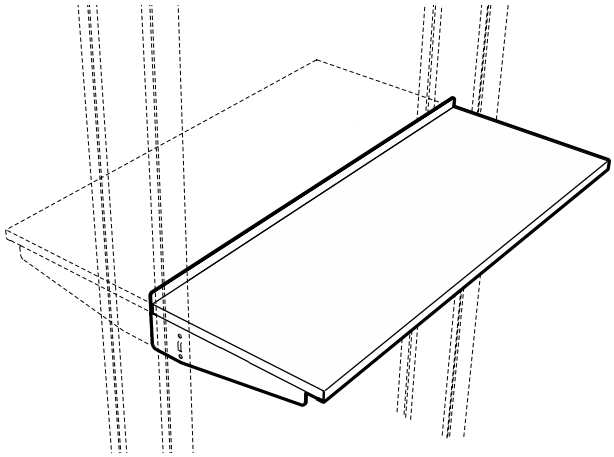

Double-sided Shelving

Double-sided Bookend Shelves consist of a pair of powder coated, 5" high, 12 gauge steel shelf brackets and a 1" thick, powder coated, 14 gauge steel shelf. Shelves are infinitely height adjustable from above the work surface to the top of the column and have limited mounting below work surface.

The rear edge of the shelf is centered on the workstation column and are available with or without retaining lips.

Column Depth Options:

09 = for 9" Deep Columns
12 = for 12" Deep Columns

Shelf Retaining Lip Options:

L0 = No shelf lip
L1 = Shelf Lip on one edge
L2 = Shelf Lip on both edges

Example: FV64M051236-**12L2** = Shelf for 12" Column with Lip on both front and back edge.

Double-sided Bookend Shelving

12" Deep	
FV64M051224-____	24"L
FV64M051230-____	30"L
FV64M051236-____	36"L
FV64M051242-____	42"L
FV64M051248-____	48"L
FV64M051254-____	54"L
FV64M051260-____	60"L
FV64M051266-____	66"L
FV64M051272-____	72"L
FV64M051278-____	78"L
FV64M051284-____	84"L
FV64M051290-____	90"L
FV64M051296-____	96"L

15" Deep	
FV64M051524-____	24"L
FV64M051530-____	30"L
FV64M051536-____	36"L
FV64M051542-____	42"L
FV64M051548-____	48"L
FV64M051554-____	54"L
FV64M051560-____	60"L
FV64M051566-____	66"L
FV64M051572-____	72"L
FV64M051578-____	78"L
FV64M051584-____	84"L
FV64M051590-____	90"L
FV64M051596-____	96"L

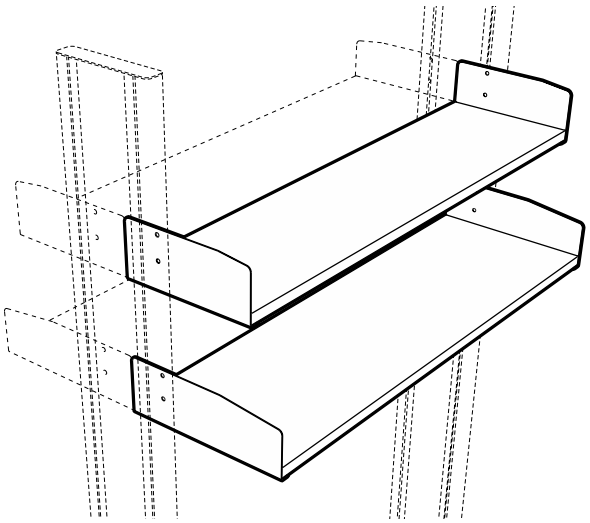

18" Deep	
FV64M051824-____	24"L
FV64M051830-____	30"L
FV64M051836-____	36"L
FV64M051842-____	42"L
FV64M051848-____	48"L
FV64M051854-____	54"L
FV64M051860-____	60"L
FV64M051866-____	66"L
FV64M051872-____	72"L
FV64M051878-____	78"L
FV64M051884-____	84"L
FV64M051890-____	90"L
FV64M051896-____	96"L

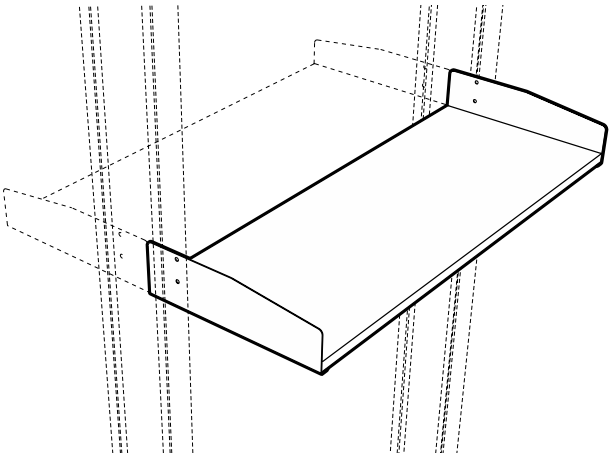

KEWAUNEE

Center Shelving

Center Undermount Shelves consist of a pair of powder coated, 12 gauge steel shelf brackets and a 1" thick, powder coated, 14 gauge steel shelf. (shelf assemblies over 24" deep are furnished with two shelves) Shelves are infinitely height adjustable from above the work surface to the top of the column and have limited mounting below work surface. Shelves are centered on the workstation columns and are available with or without retaining lips.

Column Depth Options:

09 = for 9" Deep Columns
12 = for 12" Deep Columns

Shelf Retaining Lip Options:

L0 = No shelf lip
***L1** = Shelf Lip in center
L2 = Shelf Lip on both edges
***L3** = Shelf Lip on both edges & center
* available only on shelves 24" deep & over

Example: FV66M021836-**09L2** = Shelf with Lip on both edges

Center Undermount Shelving

12" Deep		15" Deep	
FV66M021224-____	24"L	FV66M021524-____	24"L
FV66M021230-____	30"L	FV66M021530-____	30"L
FV66M021236-____	36"L	FV66M021536-____	36"L
FV66M021242-____	42"L	FV66M021542-____	42"L
FV66M021248-____	48"L	FV66M021548-____	48"L
FV66M021254-____	54"L	FV66M021554-____	54"L
FV66M021260-____	60"L	FV66M021560-____	60"L
FV66M021266-____	66"L	FV66M021566-____	66"L
FV66M021272-____	72"L	FV66M021572-____	72"L
FV66M021278-____	78"L	FV66M021578-____	78"L
FV66M021284-____	84"L	FV66M021584-____	84"L
FV66M021290-____	90"L	FV66M021590-____	90"L
FV66M021296-____	96"L	FV66M021596-____	96"L

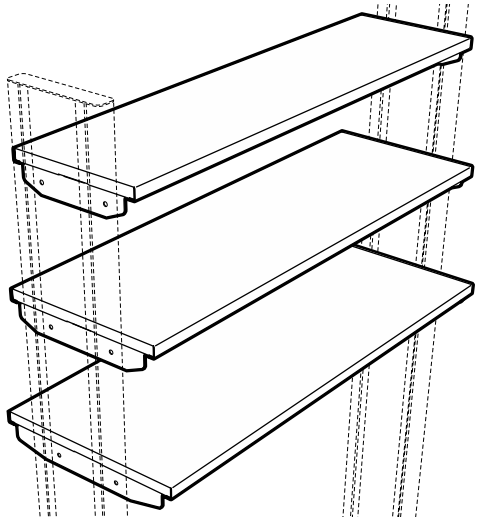

18" Deep		24" Deep	
FV66M021824-____	24"L	FV66M032424-____	24"L
FV66M021830-____	30"L	FV66M032430-____	30"L
FV66M021836-____	36"L	FV66M032436-____	36"L
FV66M021842-____	42"L	FV66M032442-____	42"L
FV66M021848-____	48"L	FV66M032448-____	48"L
FV66M021854-____	54"L	FV66M032454-____	54"L
FV66M021860-____	60"L	FV66M032460-____	60"L
FV66M021866-____	66"L	FV66M032466-____	66"L
FV66M021872-____	72"L	FV66M032472-____	72"L
FV66M021878-____	78"L	FV66M032478-____	78"L
FV66M021884-____	84"L	FV66M032484-____	84"L
FV66M021890-____	90"L	FV66M032490-____	90"L
FV66M021896-____	96"L	FV66M032496-____	96"L

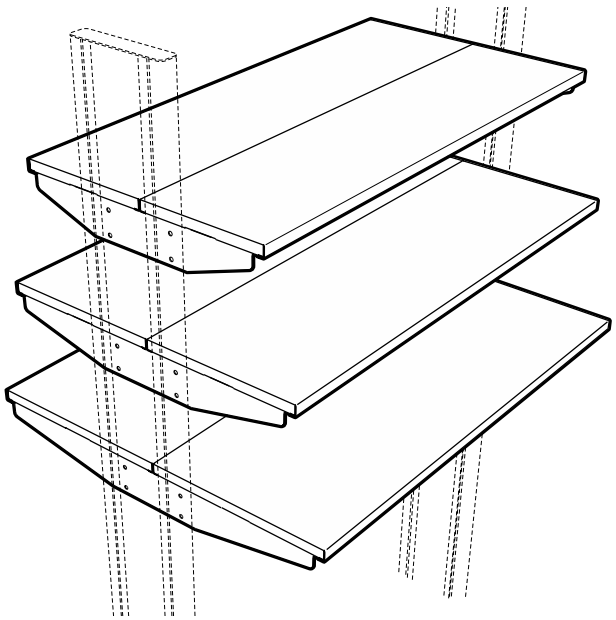

30" Deep		36" Deep	
FV66M033024-____	24"L	FV66M033624-____	24"L
FV66M033030-____	30"L	FV66M033630-____	30"L
FV66M033036-____	36"L	FV66M033636-____	36"L
FV66M033042-____	42"L	FV66M033642-____	42"L
FV66M033048-____	48"L	FV66M033648-____	48"L
FV66M033054-____	54"L	FV66M033654-____	54"L
FV66M033060-____	60"L	FV66M033660-____	60"L
FV66M033066-____	66"L	FV66M033666-____	66"L
FV66M033072-____	72"L	FV66M033672-____	72"L
FV66M033078-____	78"L	FV66M033678-____	78"L
FV66M033084-____	84"L	FV66M033684-____	84"L
FV66M033090-____	90"L	FV66M033690-____	90"L
FV66M033096-____	96"L	FV66M033696-____	96"L

Mobile Floor Shelving

Mobile Floor Shelves are designed for heavy duty storage at the floor level. Fabricated from powder coated, 16 gauge cold rolled steel, they are mounted on four fixed casters for straight tracking, and a radius front edge with recessed handle(s).

Mobile Floor Shelving

21" Deep

FV79M042124	24"L
FV79M042130	30"L
FV79M042136	36"L
FV79M042142	42"L
FV79M042148	48"L
FV79M042154	54"L
FV79M042160	60"L
FV79M042166	66"L
FV79M042172	72"L
FV79M042178	78"L
FV79M042184	84"L
FV79M042190	90"L
FV79M042196	96"L

27" Deep

FV79M042724	24"L
FV79M042730	30"L
FV79M042736	36"L
FV79M042742	42"L
FV79M042748	48"L
FV79M042754	54"L
FV79M042760	60"L
FV79M042766	66"L
FV79M042772	72"L
FV79M042778	78"L
FV79M042784	84"L
FV79M042790	90"L
FV79M042796	96"L

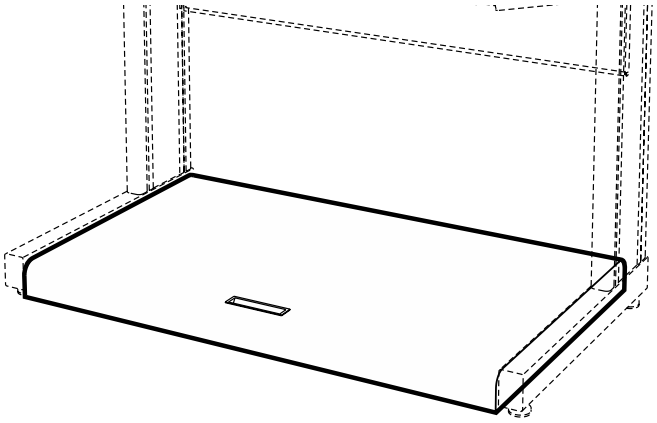

33" Deep

FV79M043324	24"L
FV79M043330	30"L
FV79M043336	36"L
FV79M043342	42"L
FV79M043348	48"L
FV79M043354	54"L
FV79M043360	60"L
FV79M043366	66"L
FV79M043372	72"L
FV79M043378	78"L
FV79M043384	84"L
FV79M043390	90"L
FV79M043396	96"L

Lighting

LED Overhead Lighting mounts between the columns and includes two support arms that allows adustment of height, tilt, and distance from column. The powder coated steel light assembly includes: LED light, On/Off switch, 24" long jumper cord, and 10 foot power cord. The light includes an easily removed diffuser and all required mounting hardware. Field installation of jumper or power cord is required.

LED Task Lighting consists of a thin-profile, white, LED strip, 9.5mm high by 33mm deep with a touch dimmer switch. It is UL listed and furnished with 120 VAC to 24 VDC power supply with ten foot power cord. The light includes a magnetic mounting strip for mounting to steel shelving and integral tabs for mounting to wood.

LED Overhead Lighting

16½" Long Support Arm		22½" Long Support Arm	
FV53M031624	24"L	**FV53M032224**	24"L
FV53M031630	30"L	**FV53M032230**	30"L
FV53M031636	36"L	**FV53M032236**	36"L
FV53M031642	42"L	**FV53M032242**	42"L
FV53M031648	48"L	**FV53M032248**	48"L
FV53M031654	54"L	**FV53M032254**	54"L
FV53M031660	60"L	**FV53M032260**	60"L
FV53M031666	66"L	**FV53M032266**	66"L
FV53M031672	72"L	**FV53M032272**	72"L
FV53M031678	78"L	**FV53M032278**	78"L
FV53M031684	84"L	**FV53M032284**	84"L
FV53M031690	90"L	**FV53M032290**	90"L
FV53M031696	96"L	**FV53M032296**	96"L

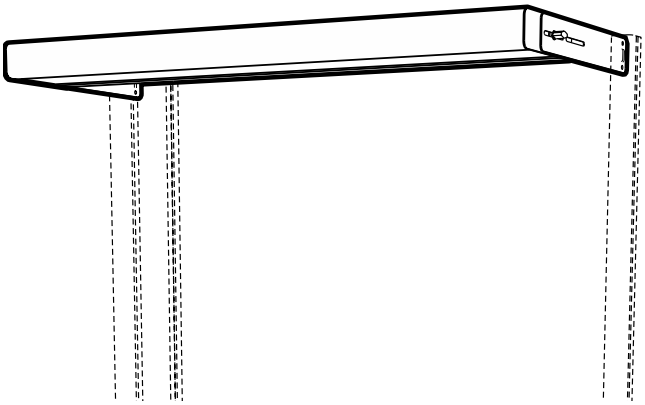

LED Task Lighting

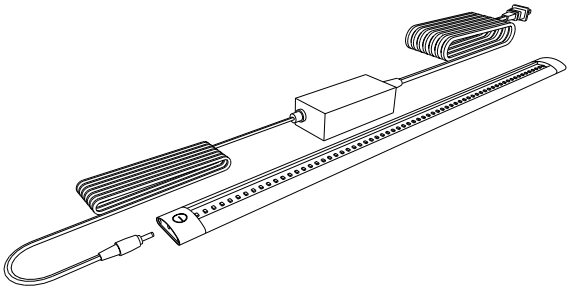

Part Number	Length	Fits Under
X-030001-00	300mm – 11⅞"	12" - 15" Shelves
X-030002-00	500mm – 19⅝"	29" - 40" Shelves
X-030003-00	1000mm – 39⅜"	46" - 47" Shelves

Accessories

Power Bars are available with either 15 or 20 amp black 120 VAC receptacles, include an On/Off switch with built in circuit breaker, and a black, 10 foot power cord with either a straight blade or twist-lock plug. They are column mounted and infinitely height adjustable from the work surface to the top of the column with limited mounting ability below work surface. Power bars are fabricated from powder coated, cold rolled steel, include all mounting hardware, and are UL Listed.

Power Cord Plug Option:

SB = Straight Blade (NEMA 5-15/5-20)
TL = Twist-lock (NEMA L5-15/L5-20)

Example: FV50M030236-A15TL
Power Bar with 15 amp Twist-lock plug

Power Bar

15 Amp		Number of Duplex Receptacles
FV50M030224-A15__	24"L	2
FV50M030230-A15__	30"L	2
FV50M030236-A15__	36"L	4
FV50M030242-A15__	42"L	4
FV50M030248-A15__	48"L	4
FV50M030254-A15__	54"L	4
FV50M030260-A15__	60"L	4
FV50M030266-A15__	66"L	4
FV50M030272-A15__	72"L	4
FV50M030278-A15__	78"L	4
FV50M030284-A15__	84"L	4
FV50M030290-A15__	90"L	4
FV50M030296-A15__	96"L	4

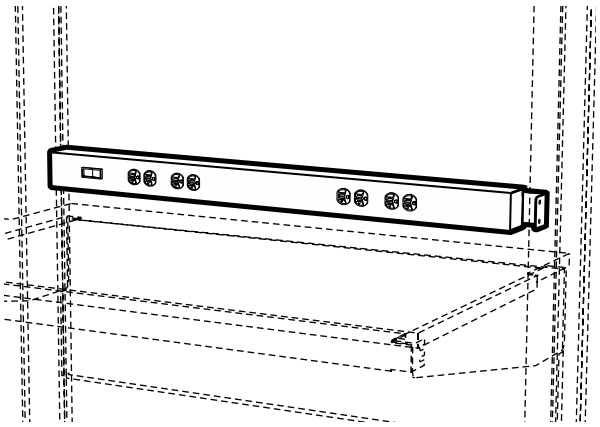

20 Amp		Number of Duplex Receptacles
FV50M030224-A20__	24"L	2
FV50M030230-A20__	30"L	2
FV50M030236-A20__	36"L	4
FV50M030242-A20__	42"L	4
FV50M030248-A20__	48"L	4
FV50M030254-A20__	54"L	4
FV50M030260-A20__	60"L	4
FV50M030266-A20__	66"L	4
FV50M030272-A20__	72"L	4
FV50M030278-A20__	78"L	4
FV50M030284-A20__	84"L	4
FV50M030290-A20__	90"L	4
FV50M030296-A20__	96"L	4

Accessories

Privacy Panels include a powder coated steel support frame, a fabric covered or magnetic marker panel, and mounting hardware. Panels are column mounted and infinitely height adjustable from above the work surface to the top of the column. When used in conjunction with shelving, privacy panels must be mounted above the shelf or below the shelf brackets.

Material/Color Option:
FC01 = Fabric Covered Tackboard – Almond
FC02 = Fabric Covered Tackboard – Black
FC03 = Fabric Covered Tackboard – Blue
FC04 = Fabric Covered Tackboard – Grey
FC05 = Fabric Covered Tackboard – Wineberry
WB01 = Magnetic Marker Board – White

Example: FV73M120236-FC01
12" High x 36" Long with Almond Fabric Covered Tackboard

Privacy Panels

12" High	
FV73M120224-____	24"L
FV73M120230-____	30"L
FV73M120236-____	36"L
FV73M120242-____	42"L
FV73M120248-____	48"L
FV73M120254-____	54"L
FV73M120260-____	60"L
FV73M120266-____	66"L
FV73M120272-____	72"L
FV73M120278-____	78"L
FV73M120284-____	84"L
FV73M120290-____	90"L
FV73M120296-____	96"L

18" High	
FV73M180224-____	24"L
FV73M180230-____	30"L
FV73M180236-____	36"L
FV73M180242-____	42"L
FV73M180248-____	48"L
FV73M180254-____	54"L
FV73M180260-____	60"L
FV73M180266-____	66"L
FV73M180272-____	72"L
FV73M180278-____	78"L
FV73M180284-____	84"L
FV73M180290-____	90"L
FV73M180296-____	96"L

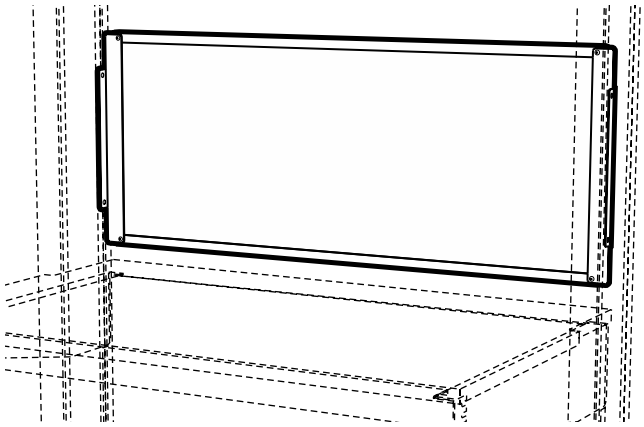

24" High	
FV73M240224-____	24"L
FV73M240230-____	30"L
FV73M240236-____	36"L
FV73M240242-____	42"L
FV73M240248-____	48"L
FV73M240254-____	54"L
FV73M240260-____	60"L
FV73M240266-____	66"L
FV73M240272-____	72"L
FV73M240278-____	78"L
FV73M240284-____	84"L
FV73M240290-____	90"L
FV73M240296-____	96"L

Accessories

Bin Bars are 12 gauge steel with a channel formation for added rigidity. Column mounted, infinitely height adjustable from above the work surface to the top of the column, bin bar mounting brackets incorporate three depth adjustment slots. Bin Bars are available in either powder coated steel, or Type 304 stainless steel. Stainless Steel Bin Bars are designed for ESD applications and include a grounding kit. Both include required mounting hardware.

Top of Column Horizontal Chases are designed to mount flush with the top of the column and can accommodate wiring, conduit, and piping. They provide a convenient chase for stand-alone benches or a continuous chase through the columns for interconnected applications. Made of powder coated steel, they include a removable top cover and all required mounting hardware.

Bin Bars

Powder Coated Steel Bin Bar w/Brackets	
FV70M020224	24"L
FV70M020230	30"L
FV70M020236	36"L
FV70M020242	42"L
FV70M020248	48"L
FV70M020254	54"L
FV70M020260	60"L
FV70M020266	66"L
FV70M020272	72"L
FV70M020278	78"L
FV70M020284	84"L
FV70M020290	90"L
FV70M020296	96"L

Stainless Steel Bin Bar w/Brackets	
FV70S020224	24"L
FV70S020230	30"L
FV70S020236	36"L
FV70S020242	42"L
FV70S020248	48"L
FV70S020254	54"L
FV70S020260	60"L
FV70S020266	66"L
FV70S020272	72"L
FV70S020278	78"L
FV70S020284	84"L
FV70S020290	90"L
FV70S020296	96"L

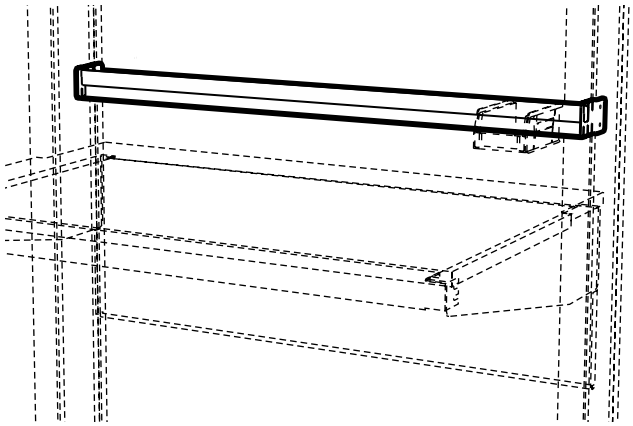

Top of Column Horizontal Chase

4" High – 8" Deep designed for 9" deep columns	
FV72M040824	24"L
FV72M040830	30"L
FV72M040836	36"L
FV72M040842	42"L
FV72M040848	48"L
FV72M040854	54"L
FV72M040860	60"L
FV72M040866	66"L
FV72M040872	72"L
FV72M040878	78"L
FV72M040884	84"L
FV72M040890	90"L
FV72M040896	96"L

4" High – 11" Deep designed for 12" deep columns	
FV72M041124	24"L
FV72M041130	30"L
FV72M041136	36"L
FV72M041142	42"L
FV72M041148	48"L
FV72M041154	54"L
FV72M041160	60"L
FV72M041166	66"L
FV72M041172	72"L
FV72M041178	78"L
FV72M041184	84"L
FV72M041190	90"L
FV72M041196	96"L

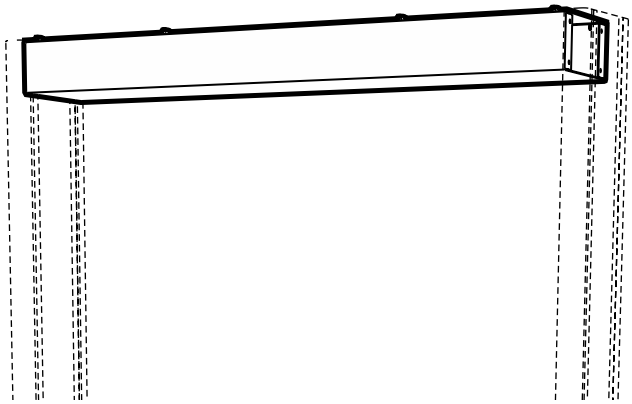

Accessories

LCD Monitor Arm - Work Surface Mount

LCDARMCL

The work surface-mounted LCD monitor arm accommodates a single monitor. It features a two-piece, low profile clamp mount and slim post.

LCD Monitor Arm - Column Mount

Evolution Arm **LCDARMEV**

The column-mounted LCD monitor arm accommodates a single monitor. A custom bracket mounts directly to vertical upright.

CPU Holder

CPUHOLDER

CPU Holder is adjustable to accommodate any size CPU. Mounts to underside of work surface.

Keyboard & Mouse Tray

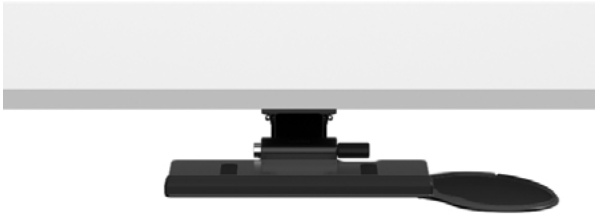

Work Surface Mount **KMTWS**
Evo Column Mount **KMTEV**

Adjustable keyboard/mouse tray mounts to underside of work surface. Mouse pad can be placed at left or right.

Service Fittings & Fixtures

Features:

Service Fittings

- May be mounted on columns with powder coated steel accent strips only
- Vertical columns accept up to three fittings
- Fittings pre-plumbed to hoses for connection to overhead service panels and chases
- Keyed quick-connect fittings to ease service connection and disconnection during bench relocation

Electrical and Data Fixtures

- May be mounted on columns with powder coated steel accent strips only
- May be pre-wired to top or bottom of column
- All cataloged components UL listed
- Columns are certified to UL standard 61010-1 when pre-wired with cataloged fixtures

  (Because of dimensional restrictions, 24" and 30" long Single-sided Column Modules as well as all 24" deep Modules are not certified to UL Standard 61010-1. Contact Kewaunee if UL Listing is required for these sizes.)

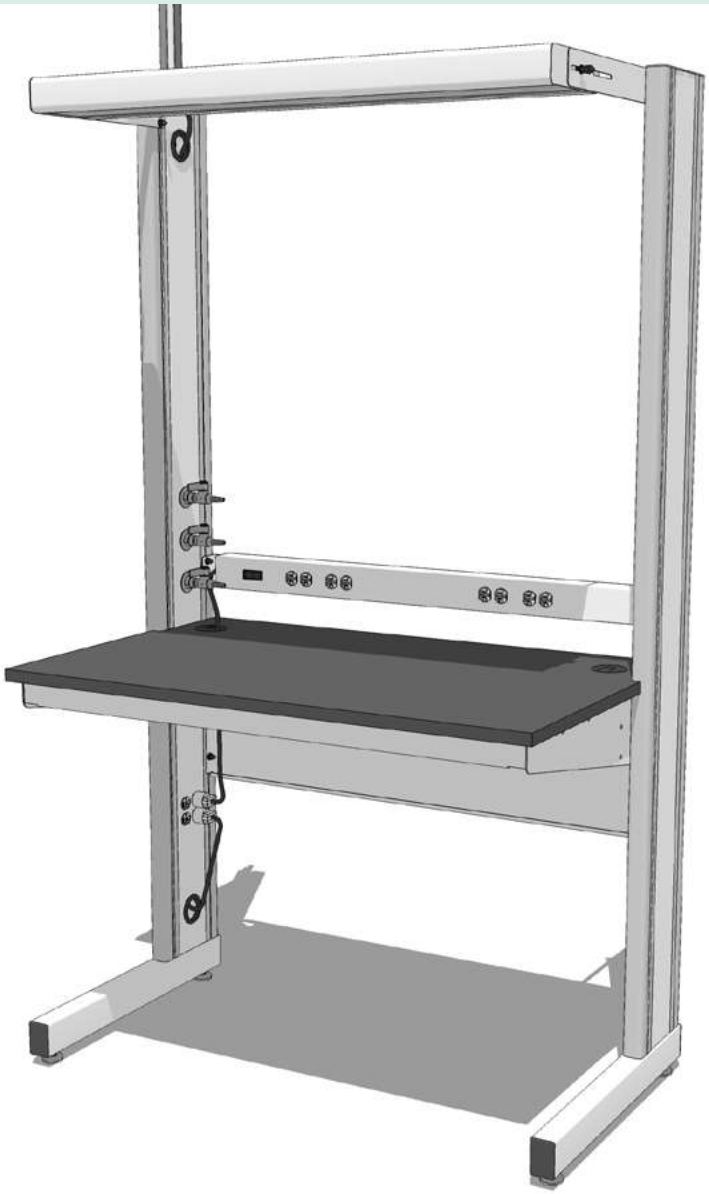

KEWAUNEE

Service Fittings

Internal Service Hoses are required to mount services on the workstation columns. They are factory installed when ordered with the service fitting and are available in either reinforced PVC or braided stainless steel. The ⅜" hoses are furnished with a ⅜" IPS female outlet and either a ⅜" IPS female inlet or ⅜" IPS male quick-connect inlet.

Hoses are available in multiple lengths from 3 feet to 8 feet above the top of an 84" column and in 9 colors to match quick-connect color codes.

Specify hose color by placing color code at end of hose part number.
Example: W-6132E36-**H2** for Orange hose with female inlet

Specify hose color and quick-connect key by placing color code and key number at end of hose part number.
Example: W-6135E36-**H1K4** for Black hose with Yellow Vacuum quick-connect

Service fittings require columns with steel accent strips.

Internal Service Hoses

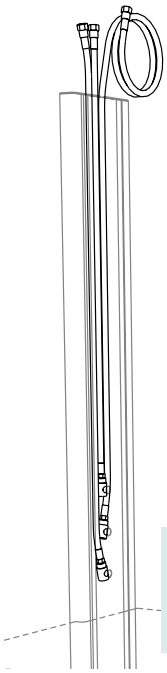

Color

2 = Orange
4 = Yellow
5 = Blue
6 = White
7 = Purple
8 = Brown

More selections necessary inside Connect to create a final part number.
Example:
W-6136E36-H6K4V

Reinforced PVC Hose
for Non-burning Gases
⅜" IPS Female Inlet
⅜" IPS Female Outlet

Part Number	Length (Above Top Of Post)
W-6134E36-H_	36" ATOP
W-6134E48-H_	48" ATOP
W-6134E60-H_	60" ATOP
W-6134E72-H_	72" ATOP
W-6134E96-H_	96" ATOP

Braided Stainless Steel Hose
for Natural & Reactive Gases
⅜" IPS Female Inlet
⅜" IPS Female Outlet

Part Number	Length (Above Top Of Post)
W-6234E36-H0	36" ATOP
W-6234E48-H0	48" ATOP
W-6234E60-H0	60" ATOP
W-6234E72-H0	72" ATOP
W-6234E96-H0	96" ATOP

Reinforced PVC Hose with Quick-connect Fitting
for Non-burning Gases
⅜" IPS Male Quick-connect Inlet (not illustrated)
⅜" IPS Female Outlet

Part Number	Length (Above Top Of Post)
W-6136E36-H_K_	36" ATOP
W-6136E48-H_K_	48" ATOP
W-6136E60-H_K_	60" ATOP
W-6136E72-H_K_	72" ATOP
W-6136E96-H_K_	96" ATOP

Braided Stainless Steel Hose with Quick-connect Fitting
for Natural & Reactive Gases
⅜" IPS Male Quick-connect Inlet (not illustrated)
⅜" IPS Female Outlet

Part Number	Length (Above Top Of Post)
W-6236E36-H0K_	36" ATOP
W-6236E48-H0K_	48" ATOP
W-6236E60-H0K_	60" ATOP
W-6236E72-H0K_	72" ATOP
W-6236E96-H0K_	96" ATOP

Keyed Quick-connect Fittings

Male Hose Mount
⅜" IPS Male

Part Number	Key Color
W-8111-K2	Orange
W-8111-K4	Yellow
W-8111-K5	Blue
W-8111-K7	Purple
W-8111-K8	Brown

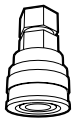

Female Hose Mount
⅜" IPS Female

Part Number	Key Color
W-9112-K2	Orange
W-9112-K4	Yellow
W-9112-K5	Blue
W-9112-K7	Purple
W-9112-K8	Brown

Key Number & Color Code	Standard Service	Female Body Sleeve Dia.		Male Body Sleeve Dia.	
		in.	mm	in	mm
K2 Orange	Air	1.16	29.5	1.02	25.8
K4 Yellow	Vacuum	1.22	31.0	1.08	27.4
K5 Blue	Gas	1.24	31.5	1.11	28.1
K7 Purple	Argon	1.31	33.3	1.17	29.7
K8 Brown	Nitrogen	1.34	34.0	1.20	30.4

Service Fittings

Ball Valves are chrome plated brass and provide on/off control of gas, air, or vacuum at pressures up to 75 PSI.

Needle Point Cocks are chrome plated brass with a nonrenewable stainless steel floating cone and a replaceable brass seat. They provide metering control of laboratory gases at pressures up to 75 PSI.

Service fittings require columns with steel accent strips.

Service Fittings

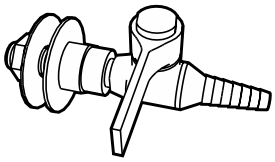

Ball Valve
3/8" IPS Male Inlet

Part Number	Service
W-0607-2A	Air
W-0607-2G	Gas
W-0607-2N	Nitrogen
W-0607-2R	Argon
W-0607-2V	Vacuum

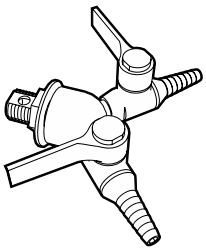

Double Ball Valve
3/8" IPS Female Inlet

Part Number	Service
W-0604-2A	Air
W-0604-2G	Gas
W-0604-2N	Nitrogen
W-0604-2R	Argon
W-0604-2V	Vacuum

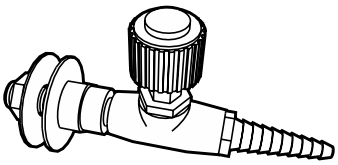

Needle Point Cock
3/8" IPS Male Inlet

Part Number	Service
W-0606-2A	Air
W-0606-2G	Gas
W-0606-2N	Nitrogen
W-0606-2R	Argon
W-0606-2V	Vacuum

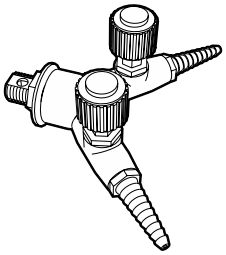

Double Needle Point Cock
3/8" IPS Female Inlet

Part Number	Service
W-0605-2A	Air
W-0605-2G	Gas
W-0605-2N	Nitrogen
W-0605-2R	Argon
W-0605-2V	Vacuum

KEWAUNEE

Electric/Data Fixtures & Accessories

Electrical Fixtures may be mounted in the workstation columns as either a single device, or double device configuration. Part numbers shown include the device, the required cutout and hardware, and installation. Electrical devices include pre-wiring when a power cord is specified. Location of devices must be specified.

RJ45—8P8C Data/Com Outlets are available in either Cat-6 or Cat-6a configurations. Part numbers shown include the device, the required cutout and hardware, and installation. They do not include wiring.

Electric/Data Fixtures require columns with steel accent strips.

Electrical/Data Fixtures

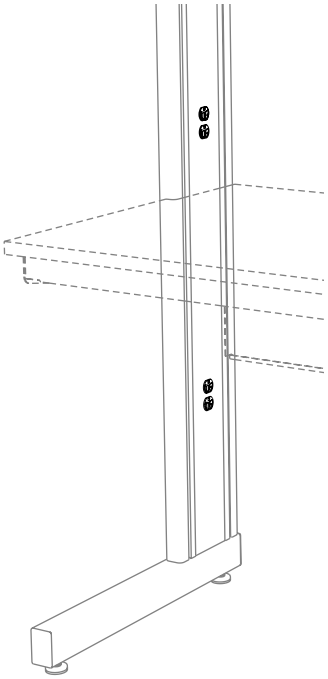

RJ45 8P8C Data/Com Outlet

Part Number	Color	Category
0720-1K-6	Black	Cat-6
0720-1V-6	Ivory	Cat-6
0720-1W-6	White	Cat-6
0720-1K-6a	Black	Cat-6a
0720-1V-6a	Ivory	Cat-6a
0720-1W-6a	White	Cat-6a

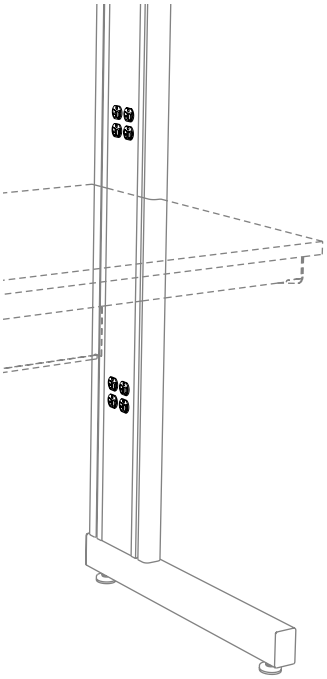

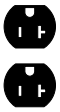

120 VAC, 20 amp specification grade, 3-wire polarized grounding duplex receptacle

Single Duplex

Part Number	Device
S581-1K	Black
S581-1V	Ivory
S581-1W	White
S581-1G	Grey
S581-1R	Red

120 VAC, 20 amp specification grade, 3-wire polarized grounding duplex receptacle

Single Duplex

Part Number	Device
S681-1K	Black
S681-1V	Ivory
S681-1W	White
S681-1G	Grey
S681-1R	Red

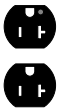

120 VAC, 20 amp hospital grade, 3-wire polarized grounding duplex receptacle

Hospital Grade Single Duplex

Part Number	Device
H581-1K	Black
H581-1V	Ivory
H581-1W	White
H581-1G	Grey
H581-1R	Red

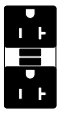

120 VAC, 20 amp, GFCI, specification grade duplex receptacle

GFCI Single Duplex

Part Number	Device
S656-1K	Black
S656-1V	Ivory
S656-1W	White
S656-1G	Grey
S656-1R	Red

Electric/Data Fixtures & Accessories

Power Cords are required to carry power from the electrical devices to wall outlets or overhead service panels.The SJ 12/3 and SJ 12/4 cords are available in multiple lengths measured from the top of 84" high columns. Standard exit point is the top of the column, but they may be routed to the bottom when specified. Power Cord color is specified by adding (**BLK**) or (**WHT**) to the end of the part number to signify Black or White respectivly. Example: **W-5621-36-WHT**

Cord Access Ports are designed to route power and data cords from the interior of the column through the column accent strip, but may be used as pass-thru ports when workstations are set in a continuous run. Ports are a 2½" diameter hole fitted with a rubber grommet creating a 2⅛" diameter access. Location of ports must be specified.

Power Cords

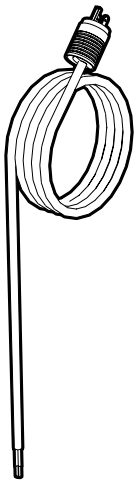

Single-circuit 3-wire

120 VAC — 20A — NEMA 5-20

Part Number	Length	Plug Type
W-5621-36-	36"ATOC	Straight Blade
W-5621-48-	48"ATOC	Straight Blade
W-5621-60-	60"ATOC	Straight Blade
W-5621-72-	72"ATOC	Straight Blade
W-5621-96-	96"ATOC	Straight Blade

120 VAC — 20A — NEMA L5-20

Part Number	Length	Plug Type
W-5622-36-	36"ATOC	Twist-Lock
W-5622-48-	48"ATOC	Twist-Lock
W-5622-60-	60"ATOC	Twist-Lock
W-5622-72-	72"ATOC	Twist-Lock
W-5622-96-	96"ATOC	Twist-Lock

Dual-circuit 4-wire

120 VAC — 20A — NEMA L14-20

Part Number	Length	Plug Type
W-5624-36-	36"ATOC	Twist-Lock
W-5624-48-	48"ATOC	Twist-Lock
W-5624-60-	60"ATOC	Twist-Lock
W-5624-72-	72"ATOC	Twist-Lock
W-5624-96-	96"ATOC	Twist-Lock

Cord Access Ports

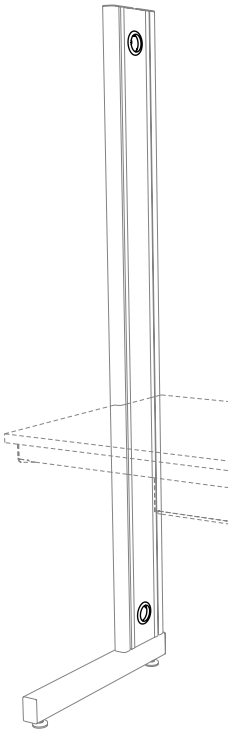

Part Number
F-8421-00

Steel & Wood Cabinets

Storage cabinets can be found in their own catalogs.

Research Collection Steel Furniture and **Signature Series Wood Furniture**

Steel Base Cabinets

- Electrostatically applied, chemical resistant, powder coat finish available in colors to compliment any laboratory environment
- Heavy gauge formed and welded steel cabinet body construction provides strength and durability
- One piece drawer body, radiused all four sides
- Furnished standard with full-extension, soft-close drawer slides
- One-piece case bottom and horizontal front rail
- Furnished standard with finished back
- Exclusive positive door catch option
- Five-knuckle, semi-concealed, and concealed hinges available

Wood Base Cabinets

- Multiple coat, chemical resistant finish system formulated to highlight the natural grain patterns
- Dovetailed drawer construction with nine-ply hardwood plywood drawer sides
- ¾" seven-ply hardwood plywood end panels, bottom and shelf, with solid hardwood facing
- Full extension, ball bearing, 100 lb. load rated, drawer slides, standard on all drawers and pullboards.
- ¾" seven-ply hardwood plywood finished back dadoed into end panels and bottom
- Institutional type five-knuckle offset door hinges rated for 150 pound loads

Upper Storage Cabinets

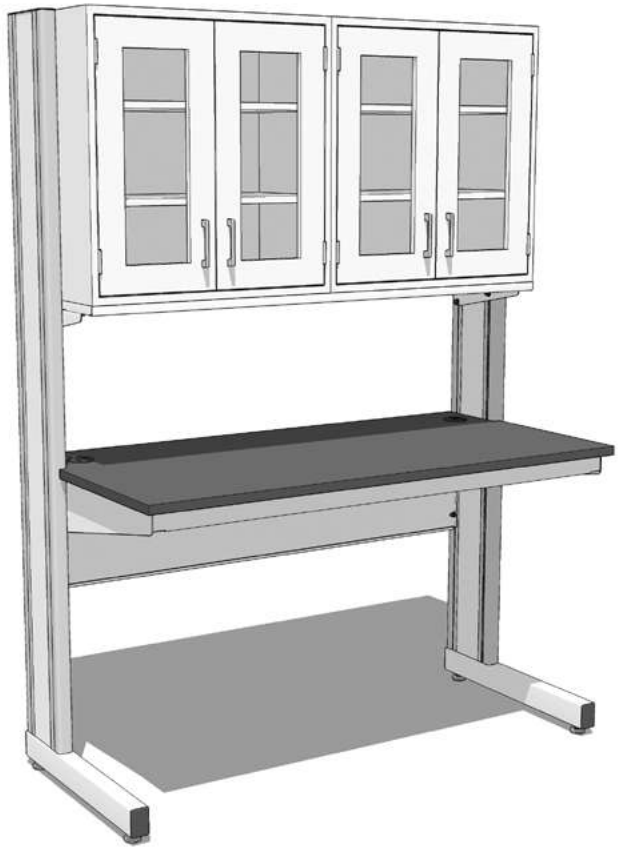

Sliding Plate Glass Door Cabinets

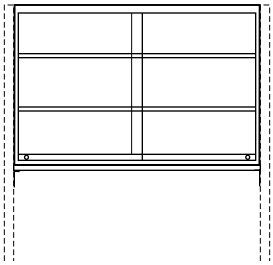

Single-sided Steel Cabinets

Depth	Steel Cabinet	Length
12¾"	**FW10C301330-00_0__**	30"
12¾"	**FW10C301336-00_0__**	36"
12¾"	**FW10C301342-00_0__**	42"
12¾"	**FW10C301348-00_0__**	48"
16"	**FW10C301630-00_0__**	30"
16"	**FW10C301636-00_0__**	36"
16"	**FW10C301642-00_0__**	42"
16"	**FW10C301648-00_0__**	48"

Double-sided Steel Cabinets

Depth	Steel Cabinet	Length
25½"	**FW10C302630-00_0__**	30"
25½"	**FW10C302636-00_0__**	36"
25½"	**FW10C302642-00_0__**	42"
25½"	**FW10C302648-00_0__**	48"
32"	**FW10C303230-00_0__**	30"
32"	**FW10C303236-00_0__**	36"
32"	**FW10C303242-00_0__**	42"
32”	**FW10C303248-00_0__**	48”

KEWAUNEE

Upper Storage Cabinets

Upper Storage Cabinets are used in place of open shelving when enclosed storage and/or resistance to dust is required. Cabinets are available in powder coated steel or hardwood veneer plywood construction, and in a variety of door styles. All Evolution upper cabinets are 30" high and include two adjustable shelves. Double-sided cabinets use two single-sided cabinets mounted back-to-back on a single support assembly. Cabinets mount between columns and include support assembly and mounting hardware. Add **09** or **12** to end of part number to indicate column depth of supporting module.

Note: Last four digits of part number designates cabinet/door style and hardware selection. See page 38 for full explanation. Actual product may vary slightly from catalog illustration due to style and hardware selection.

Sliding Glazed Door Cabinets

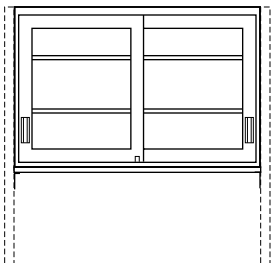

Single-sided Steel Cabinets / Single-sided Wood Cabinets

Depth	Steel Cabinet	Length	Wood Cabinet	Depth
12¾"	**FW41C301330-0__0__**	30"		
12¾"	**FW41C301336-0__0__**	36"		
12¾"	**FW41C301342-0__0__**	42"		
12¾"	**FW41C301348-0__0__**	48"		
16"	**FW41C301630-0__0__**	30"		
16"	**FW41C301636-0__0__**	36"	**FW11W301636-00_0__**	16"
16"	**FW41C301642-0__0__**	42"		
16"	**FW41C301648-0__0__**	48"		

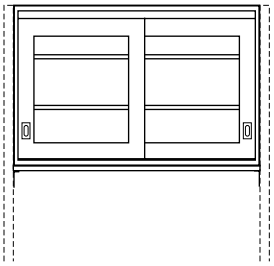

Double-sided Steel Cabinets

Depth	Steel Cabinet	Length
25½"	**FW41C302630-0__0__**	30"
25½"	**FW41C302636-0__0__**	36"
25½"	**FW41C302642-0__0__**	42"
25½"	**FW41C302648-0__0__**	48"
32"	**FW41C303230-0__0__**	30"
32"	**FW41C303236-0__0__**	36"
32"	**FW41C303242-0__0__**	42"
32"	**FW41C303248-0__0__**	48"

Sliding Panel Door Cabinets

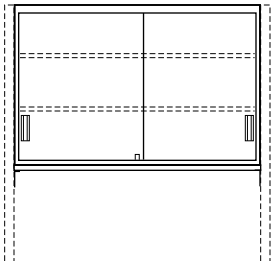

Single-sided Steel Cabinets

Depth	Steel Cabinet	Length
12¾"	**FW12C301330-0__0__**	30"
12¾"	**FW12C301336-0__0__**	36"
12¾"	**FW12C301342-0__0__**	42"
12¾"	**FW12C301348-0__0__**	48"
16"	**FW12C301630-0__0__**	30"
16"	**FW12C301636-0__0__**	36"
16"	**FW12C301642-0__0__**	42"
16"	**FW12C301648-0__0__**	48"

Double-sided Steel Cabinets

Depth	Steel Cabinet	Length
25½"	**FW12C302630-0__0__**	30"
25½"	**FW12C302636-0__0__**	36"
25½"	**FW12C302642-0__0__**	42"
25½"	**FW12C302648-0__0__**	48"
32"	**FW12C303230-0__0__**	30"
32"	**FW12C303236-0__0__**	36"
32"	**FW12C303242-0__0__**	42"
32"	**FW12C303248-0__0__**	48"

Upper Storage Cabinets

Upper Storage Cabinets are used in place of open shelving when enclosed storage and/or resistance to dust is required. Cabinets are available in powder coated steel or hardwood veneer plywood construction, and in a variety of door styles. All Evolution upper cabinets are 30" high and include two adjustable shelves. Double-sided cabinets use two single-sided cabinets mounted back-to-back on a single support assembly. Cabinets mount between columns and include support assembly and mounting hardware. Add **09** or **12** to end of part number to indicate column depth of supporting module.

Note: Last four digits of part number designates cabinet/door style and hardware selection. See page 38 for full explanation. Actual product may vary slightly from catalog illustration due to style and hardware selection.

Swinging Glazed Door Cabinets

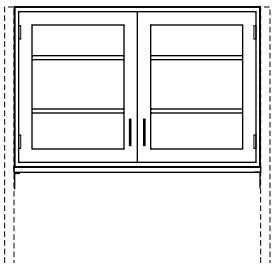

Single-sided Steel Cabinets

Depth	Steel Cabinet	Length
12¾"	**FW50C301330-_____**	30"
12¾"	**FW50C301336-_____**	36"
12¾"	**FW50C301342-_____**	42"
12¾"	**FW50C301348-_____**	48"
16"	**FW50C301630-_____**	30"
16"	**FW50C301636-_____**	36"
16"	**FW50C301642-_____**	42"
16"	**FW50C301648-_____**	48"

Single-sided Wood Cabinets

Wood Cabinet	Depth
FW20W301236-_____	12"
FW20W301248-_____	12"

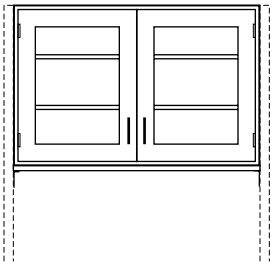

Double-sided Steel Cabinets

Depth	Steel Cabinet	Length
25½"	**FW50C302630-_____**	30"
25½"	**FW50C302636-_____**	36"
25½"	**FW50C302642-_____**	42"
25½"	**FW50C302648-_____**	48"
32"	**FW50C303230-_____**	30"
32"	**FW50C303236-_____**	36"
32"	**FW50C303242-_____**	42"
32"	**FW50C303248-_____**	48"

Swinging Panel Door Cabinets

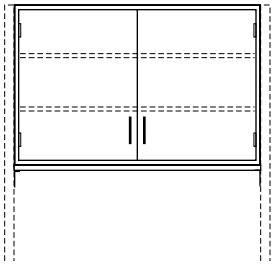

Single-sided Steel Cabinets

Depth	Steel Cabinet	Length
12¾"	**FW25C301330-_____**	30"
12¾"	**FW25C301336-_____**	36"
12¾"	**FW25C301342-_____**	42"
12¾"	**FW25C301348-_____**	48"
16"	**FW25C301630-_____**	30"
16"	**FW25C301636-_____**	36"
16"	**FW25C301642-_____**	42"
16"	**FW25C301648-_____**	48"

Double-sided Steel Cabinets

Depth	Steel Cabinet	Length
25½"	**FW25C302630-_____**	30"
25½"	**FW25C302636-_____**	36"
25½"	**FW25C302642-_____**	42"
25½"	**FW25C302648-_____**	48"
32"	**FW25C303230-_____**	30"
32"	**FW25C303236-_____**	36"
32"	**FW25C303242-_____**	42"
32"	**FW25C303248-_____**	48"

KEWAUNEE

Pass-thru Upper Storage Cabinets

Sliding Plate Glass Door Cabinets

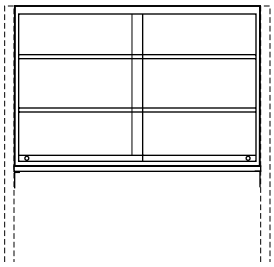

Depth	Steel Cabinet	Length
16"	**FW13C301630-00_0__**	30"
16"	**FW13C301636-00_0__**	36"
16"	**FW13C301642-00_0__**	42"
16"	**FW13C301648-00_0__**	48"
22”	**FW13C302230-00_0__**	30"
22”	**FW13C302236-00_0__**	36"
22”	**FW13C302242-00_0__**	42"
22”	**FW13C302248-00_0__**	48"

Sliding Glazed Glass Door Cabinets

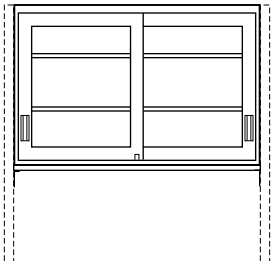

Depth	Steel Cabinet	Length
16"	**FW14C301630-0__0__**	30"
16"	**FW14C301636-0__0__**	36"
16"	**FW14C301642-0__0__**	42"
16"	**FW14C301648-0__0__**	48"
22”	**FW14C302230-0__0__**	30"
22”	**FW14C302236-0__0__**	36"
22”	**FW14C302242-0__0__**	42"
22”	**FW14C302248-0__0__**	48"

Sliding Panel Door Cabinets

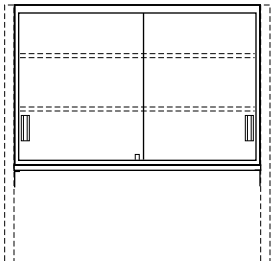

Depth	Steel Cabinet	Length
16"	**FW15C301630-0__0__**	30"
16"	**FW15C301636-0__0__**	36"
16"	**FW15C301642-0__0__**	42"
16"	**FW15C301648-0__0__**	48"
22”	**FW15C302230-0__0__**	30"
22”	**FW15C302236-0__0__**	36"
22”	**FW15C302242-0__0__**	42"
22”	**FW15C302248-0__0__**	48"

Swinging Glazed Door Cabinets

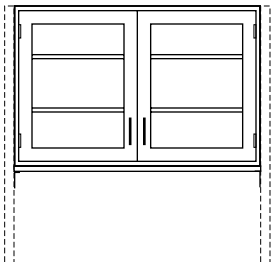

Depth	Steel Cabinet	Length	Wood Cabinet	Depth
16"	**FW53C301630-_____**	30"		
16"	**FW53C301636-_____**	36"		
16"	**FW53C301642-_____**	42"		
16"	**FW53C301648-_____**	48"		
22”	**FW53C302230-_____**	30"	**FW23W302230-_____**	22"
22”	**FW53C302236-_____**	36"	**FW23W302236-_____**	22"
22”	**FW53C302242-_____**	42"		
22”	**FW53C302248-_____**	48"		

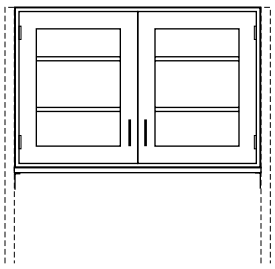

Swinging Panel Door Cabinets

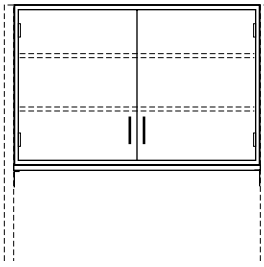

Depth	Steel Cabinet	Length
16"	**FW28C301630-_____**	30"
16"	**FW28C301636-_____**	36"
16"	**FW28C301642-_____**	42"
16"	**FW28C301648-_____**	48"
22”	**FW28C302230-_____**	30"
22”	**FW28C302236-_____**	36"
22”	**FW28C302242-_____**	42"
22”	**FW28C302248-_____**	48"

Upper Storage Cabinets

Upper Storage Cabinets are used in place of open shelving when enclosed storage and/or resistance to dust is required. Cabinets are available in powder coated steel or hardwood veneer plywood construction, and in a variety of door styles. All Evolution upper cabinets are 30" high and include two adjustable shelves. Double-sided cabinets use two single-sided cabinets mounted back-to-back on a single support assembly. Cabinets mount between columns and include support assembly and mounting hardware. Add **09** or **12** to end of part number to indicate column depth of supporting module.

Note: Last four digits of part number designates cabinet/door style and hardware selection. See page 38 for full explanation. Actual product may vary slightly from catalog illustration due to style and hardware selection.

Sliding Plate Glass Door Cabinets

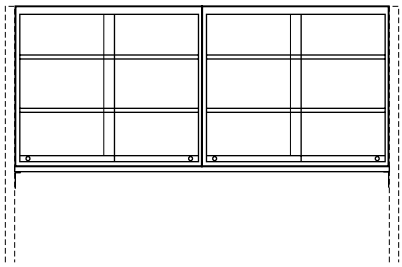

Single-sided Steel Cabinets

Depth	Steel Cabinet	Length
12¾"	**FW10C301354-00_0__**	54"
12¾"	**FW10C301360-00_0__**	60"
12¾"	**FW10C301366-00_0__**	66"
12¾"	**FW10C301372-00_0__**	72"
12¾"	**FW10C301378-00_0__**	78"
12¾"	**FW10C301384-00_0__**	84"
12¾"	**FW10C301390-00_0__**	90"
12¾"	**FW10C301396-00_0__**	96"
16"	**FW10C301654-00_0__**	54"
16"	**FW10C301660-00_0__**	60"
16"	**FW10C301666-00_0__**	66"
16"	**FW10C301672-00_0__**	72"
16"	**FW10C301678-00_0__**	78"
16"	**FW10C301684-00_0__**	84"
16"	**FW10C301690-00_0__**	90"
16"	**FW10C301696-00_0__**	96"

Double-sided Steel Cabinets

Depth	Steel Cabinet	Length
25½"	**FW10C302654-00_0__**	54"
25½"	**FW10C302660-00_0__**	60"
25½"	**FW10C302666-00_0__**	66"
25½"	**FW10C302672-00_0__**	72"
25½"	**FW10C302678-00_0__**	78"
25½"	**FW10C302684-00_0__**	84"
25½"	**FW10C302690-00_0__**	90"
25½"	**FW10C302696-00_0__**	96"
32"	**FW10C303254-00_0__**	54"
32"	**FW10C303260-00_0__**	60"
32"	**FW10C303266-00_0__**	66"
32"	**FW10C303272-00_0__**	72"
32"	**FW10C303278-00_0__**	78"
32"	**FW10C303284-00_0__**	84"
32"	**FW10C303290-00_0__**	90"
32"	**FW10C303296-00_0__**	96"

KEWAUNEE

Upper Storage Cabinets

Upper Storage Cabinets are used in place of open shelving when enclosed storage and/or resistance to dust is required. Cabinets are available in powder coated steel or hardwood veneer plywood construction, and in a variety of door styles. All Evolution upper cabinets are 30" high and include two adjustable shelves. Double-sided cabinets use two single-sided cabinets mounted back-to-back on a single support assembly. Cabinets mount between columns and include support assembly and mounting hardware. Add **09** or **12** to end of part number to indicate column depth of supporting module.

Note: Last four digits of part number designates cabinet/door style and hardware selection. See page 38 for full explanation. Actual product may vary slightly from catalog illustration due to style and hardware selection.

Sliding Glazed Door Cabinets

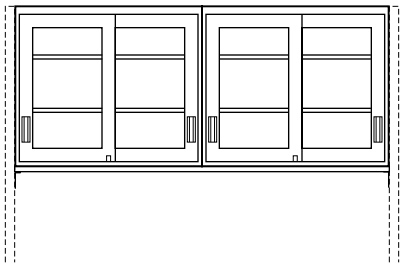

Single-sided Steel Cabinets

Depth	Steel Cabinet	Length
12¾"	**FW41C301354-0__0__**	54"
12¾"	**FW41C301360-0__0__**	60"
12¾"	**FW41C301366-0__0__**	66"
12¾"	**FW41C301372-0__0__**	72"
12¾"	**FW41C301378-0__0__**	78"
12¾"	**FW41C301384-0__0__**	84"
12¾"	**FW41C301390-0__0__**	90"
12¾"	**FW41C301396-0__0__**	96"
16"	**FW41C301654-0__0__**	54"
16"	**FW41C301660-0__0__**	60"
16"	**FW41C301666-0__0__**	66"
16"	**FW41C301672-0__0__**	72"
16"	**FW41C301678-0__0__**	78"
16"	**FW41C301684-0__0__**	84"
16"	**FW41C301690-0__0__**	90"
16"	**FW41C301696-0__0__**	96"

Double-sided Steel Cabinets

Depth	Steel Cabinet	Length
25½"	**FW41C302654-0__0__**	54"
25½"	**FW41C302660-0__0__**	60"
25½"	**FW41C302666-0__0__**	66"
25½"	**FW41C302672-0__0__**	72"
25½"	**FW41C302678-0__0__**	78"
25½"	**FW41C302684-0__0__**	84"
25½"	**FW41C302690-0__0__**	90"
25½"	**FW41C302696-0__0__**	96"
32"	**FW41C303254-0__0__**	54"
32"	**FW41C303260-0__0__**	60"
32"	**FW41C303266-0__0__**	66"
32"	**FW41C303272-0__0__**	72"
32"	**FW41C303278-0__0__**	78"
32"	**FW41C303284-0__0__**	84"
32"	**FW41C303290-0__0__**	90"
32"	**FW41C303296-0__0__**	96"

Upper Storage Cabinets

Upper Storage Cabinets are used in place of open shelving when enclosed storage and/or resistance to dust is required. Cabinets are available in powder coated steel or hardwood veneer plywood construction, and in a variety of door styles. All Evolution upper cabinets are 30" high and include two adjustable shelves. Double-sided cabinets use two single-sided cabinets mounted back-to-back on a single support assembly. Cabinets mount between columns and include support assembly and mounting hardware. Add **09** or **12** to end of part number to indicate column depth of supporting module.

Note: Last four digits of part number designates cabinet/door style and hardware selection. See page 38 for full explanation. Actual product may vary slightly from catalog illustration due to style and hardware selection.

Sliding Panel Door Cabinets

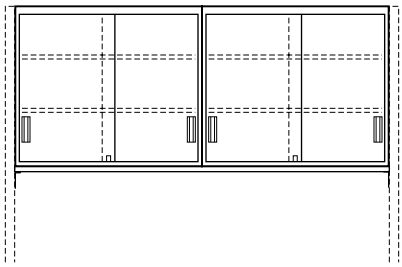

Single-sided Steel Cabinets

Depth	Steel Cabinet	Length
12¾"	**FW12C301354-0__0__**	54"
12¾"	**FW12C301360-0__0__**	60"
12¾"	**FW12C301366-0__0__**	66"
12¾"	**FW12C301372-0__0__**	72"
12¾"	**FW12C301378-0__0__**	78"
12¾"	**FW12C301384-0__0__**	84"
12¾"	**FW12C301390-0__0__**	90"
12¾"	**FW12C301396-0__0__**	96"
16"	**FW12C301654-0__0__**	54"
16"	**FW12C301660-0__0__**	60"
16"	**FW12C301666-0__0__**	66"
16"	**FW12C301672-0__0__**	72"
16"	**FW12C301678-0__0__**	78"
16"	**FW12C301684-0__0__**	84"
16"	**FW12C301690-0__0__**	90"
16"	**FW12C301696-0__0__**	96"

Double-sided Steel Cabinets

Depth	Steel Cabinet	Length
25½"	**FW12C302654-0__0__**	54"
25½"	**FW12C302660-0__0__**	60"
25½"	**FW12C302666-0__0__**	66"
25½"	**FW12C302672-0__0__**	72"
25½"	**FW12C302678-0__0__**	78"
25½"	**FW12C302684-0__0__**	84"
25½"	**FW12C302690-0__0__**	90"
25½"	**FW12C302696-0__0__**	96"
32"	**FW12C303254-0__0__**	54"
32"	**FW12C303260-0__0__**	60"
32"	**FW12C303266-0__0__**	66"
32"	**FW12C303272-0__0__**	72"
32"	**FW12C303278-0__0__**	78"
32"	**FW12C303284-0__0__**	84"
32"	**FW12C303290-0__0__**	90"
32"	**FW12C303296-0__0__**	96"

KEWAUNEE

Upper Storage Cabinets

Upper Storage Cabinets are used in place of open shelving when enclosed storage and/or resistance to dust is required. Cabinets are available in powder coated steel or hardwood veneer plywood construction, and in a variety of door styles. All Evolution upper cabinets are 30" high and include two adjustable shelves. Double-sided cabinets use two single-sided cabinets mounted back-to-back on a single support assembly. Cabinets mount between columns and include support assembly and mounting hardware. Add **09** or **12** to end of part number to indicate column depth of supporting module.

Note: Last four digits of part number designates cabinet/door style and hardware selection. See page 38 for full explanation. Actual product may vary slightly from catalog illustration due to style and hardware selection.

Swinging Glazed Door Cabinets

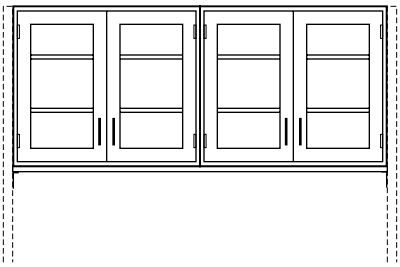

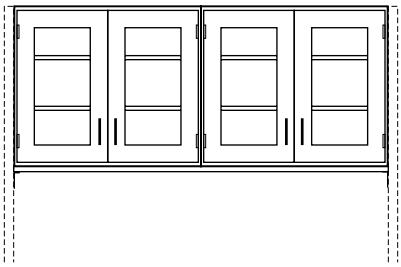

Single-sided Steel Cabinets

Depth	Steel Cabinet	Length
12¾"	**FW50C301354-_____**	54"
12¾"	**FW50C301360-_____**	60"
12¾"	**FW50C301366-_____**	66"
12¾"	**FW50C301372-_____**	72"
12¾"	**FW50C301378-_____**	78"
12¾"	**FW50C301384-_____**	84"
12¾"	**FW50C301390-_____**	90"
12¾"	**FW50C301396-_____**	96"
16"	**FW50C301654-_____**	54"
16"	**FW50C301660-_____**	60"
16"	**FW50C301666-_____**	66"
16"	**FW50C301672-_____**	72"
16"	**FW50C301678-_____**	78"
16"	**FW50C301684-_____**	84"
16"	**FW50C301690-_____**	90"
16"	**FW50C301696-_____**	96"

Double-sided Steel Cabinets

Depth	Steel Cabinet	Length
25½"	**FW50C302654-_____**	54"
25½"	**FW50C302660-_____**	60"
25½"	**FW50C302666-_____**	66"
25½"	**FW50C302672-_____**	72"
25½"	**FW50C302678-_____**	78"
25½"	**FW50C302684-_____**	84"
25½"	**FW50C302690-_____**	90"
25½"	**FW50C302696-_____**	96"
32"	**FW50C303254-_____**	54"
32"	**FW50C303260-_____**	60"
32"	**FW50C303266-_____**	66"
32"	**FW50C303272-_____**	72"
32"	**FW50C303278-_____**	78"
32"	**FW50C303284-_____**	84"
32"	**FW50C303290-_____**	90"
32"	**FW50C303296-_____**	96"

Double-sided Wood Cabinets

Depth	Wood Cabinet	Length
32"	**FW20W303278-_____**	78"

Upper Storage Cabinets

Upper Storage Cabinets are used in place of open shelving when enclosed storage and/or resistance to dust is required. Cabinets are available in powder coated steel or hardwood veneer plywood construction, and in a variety of door styles. All Evolution upper cabinets are 30" high and include two adjustable shelves. Double-sided cabinets use two single-sided cabinets mounted back-to-back on a single support assembly. Cabinets mount between columns and include support assembly and mounting hardware. Add **09** or **12** to end of part number to indicate column depth of supporting module.

Note: Last four digits of part number designates cabinet/door style and hardware selection. See page 38 for full explanation. Actual product may vary slightly from catalog illustration due to style and hardware selection.

Swinging Panel Door Cabinets

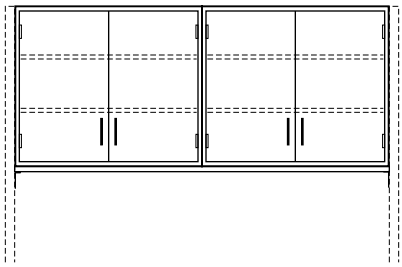

Single-sided Steel Cabinets

Depth	Steel Cabinet	Length
12¾"	**FW25C301354-_____**	54"
12¾"	**FW25C301360-_____**	60"
12¾"	**FW25C301366-_____**	66"
12¾"	**FW25C301372-_____**	72"
12¾"	**FW25C301378-_____**	78"
12¾"	**FW25C301384-_____**	84"
12¾"	**FW25C301390-_____**	90"
12¾"	**FW25C301396-_____**	96"
16"	**FW25C301654-_____**	54"
16"	**FW25C301660-_____**	60"
16"	**FW25C301666-_____**	66"
16"	**FW25C301672-_____**	72"
16"	**FW25C301678-_____**	78"
16"	**FW25C301684-_____**	84"
16"	**FW25C301690-_____**	90"
16"	**FW25C301696-_____**	96"

Double-sided Steel Cabinets

Depth	Steel Cabinet	Length
25½"	**FW25C302654-_____**	54"
25½"	**FW25C302660-_____**	60"
25½"	**FW25C302666-_____**	66"
25½"	**FW25C302672-_____**	72"
25½"	**FW25C302678-_____**	78"
25½"	**FW25C302684-_____**	84"
25½"	**FW25C302690-_____**	90"
25½"	**FW25C302696-_____**	96"
32"	**FW25C303254-_____**	54"
32"	**FW25C303260-_____**	60"
32"	**FW25C303266-_____**	66"
32"	**FW25C303272-_____**	72"
32"	**FW25C303278-_____**	78"
32"	**FW25C303284-_____**	84"
32"	**FW25C303290-_____**	90"
32"	**FW25C303296-_____**	96"

KEWAUNEE

Pass-thru Upper Storage Cabinets

Sliding Plate Glass Door Cabinets

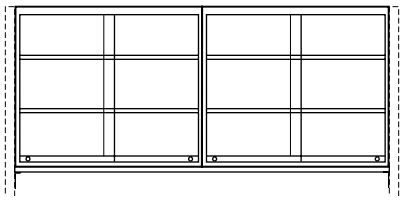

Depth	Steel Cabinet	Length
16"	**FW13C301654-00_0__**	54"
16"	**FW13C301660-00_0__**	60"
16"	**FW13C301666-00_0__**	66"
16"	**FW13C301672-00_0__**	72"
16"	**FW13C301678-00_0__**	78"
16"	**FW13C301684-00_0__**	84"
16"	**FW13C301690-00_0__**	90"
16"	**FW13C301696-00_0__**	96"
22”	**FW13C302254-00_0__**	54"
22”	**FW13C302260-00_0__**	60"
22”	**FW13C302266-00_0__**	66"
22”	**FW13C302272-00_0__**	72"
22”	**FW13C302278-00_0__**	78"
22”	**FW13C302284-00_0__**	84"
22”	**FW13C302290-00_0__**	90"
22”	**FW13C302296-00_0__**	96"

Pass-thru Upper Storage Cabinets

Pass-thru Upper Storage Cabinets are used in place of open shelving when enclosed storage and/or resistance to dust is required. Cabinets are available in powder coated steel or hardwood veneer plywood construction, and in a variety ofdoor styles. All Evolution upper cabinets are 30" high and include two adjustable shelves. Cabinets mount between columns and include support assembly and mounting hardware. Add **09** or **12** to end of part number to indicate column depth of supporting module.

Note: Last four digits of part number designates cabinet/door style and hardware selection. See page 38 for full explanation. Actual product may vary slightly from catalog illustration due to style and hardware selection.

Sliding Glazed Door Cabinets

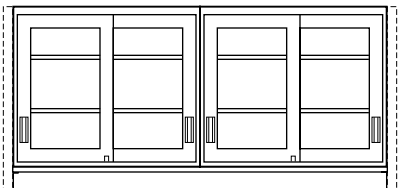

Depth	Steel Cabinet	Length
16"	**FW14C301654-0__0__**	54"
16"	**FW14C301660-0__0__**	60"
16"	**FW14C301666-0__0__**	66"
16"	**FW14C301672-0__0__**	72"
16"	**FW14C301678-0__0__**	78"
16"	**FW14C301684-0__0__**	84"
16"	**FW14C301690-0__0__**	90"
16"	**FW14C301696-0__0__**	96"
22"	**FW14C302254-0__0__**	54"
22"	**FW14C302260-0__0__**	60"
22"	**FW14C302266-0__0__**	66"
22"	**FW14C302272-0__0__**	72"
22"	**FW14C302278-0__0__**	78"
22"	**FW14C302284-0__0__**	84"
22"	**FW14C302290-0__0__**	90"
22"	**FW14C302296-0__0__**	96"

Swinging Glazed Door Cabinets

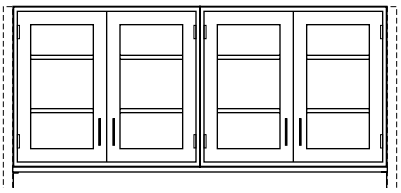

Depth	Steel Cabinet	Length
16"	**FW53C301654-_____**	54"
16"	**FW53C301660-_____**	60"
16"	**FW53C301666-_____**	66"
16"	**FW53C301672-_____**	72"
16"	**FW53C301678-_____**	78"
16"	**FW53C301684-_____**	84"
16"	**FW53C301690-_____**	90"
16"	**FW53C301696-_____**	96"
22"	**FW53C302254-_____**	54"
22"	**FW53C302260-_____**	60"
22"	**FW53C302266-_____**	66"
22"	**FW53C302272-_____**	72"
22"	**FW53C302278-_____**	78"
22"	**FW53C302284-_____**	84"
22"	**FW53C302290-_____**	90"
22"	**FW53C302296-_____**	96"

Sliding Panel Door Cabinets

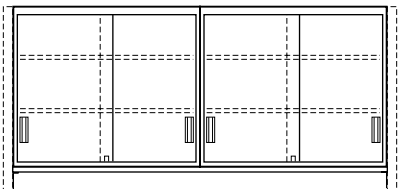

Depth	Steel Cabinet	Length
16"	**FW15C301654-0__0__**	54"
16"	**FW15C301660-0__0__**	60"
16"	**FW15C301666-0__0__**	66"
16"	**FW15C301672-0__0__**	72"
16"	**FW15C301678-0__0__**	78"
16"	**FW15C301684-0__0__**	84"
16"	**FW15C301690-0__0__**	90"
16"	**FW15C301696-0__0__**	96"
22"	**FW15C302254-0__0__**	54"
22"	**FW15C302260-0__0__**	60"
22"	**FW15C302266-0__0__**	66"
22"	**FW15C302272-0__0__**	72"
22"	**FW15C302278-0__0__**	78"
22"	**FW15C302284-0__0__**	84"
22"	**FW15C302290-0__0__**	90"
22"	**FW15C302296-0__0__**	96"

Swinging Panel Door Cabinets

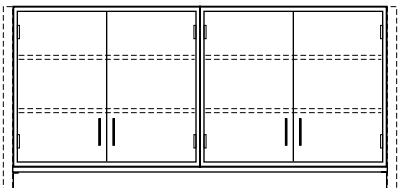

Depth	Steel Cabinet	Length
16"	**FW28C301654-_____**	54"
16"	**FW28C301660-_____**	60"
16"	**FW28C301666-_____**	66"
16"	**FW28C301672-_____**	72"
16"	**FW28C301678-_____**	78"
16"	**FW28C301684-_____**	84"
16"	**FW28C301690-_____**	90"
16"	**FW28C301696-_____**	96"
22"	**FW28C302254-_____**	54"
22"	**FW28C302260-_____**	60"
22"	**FW28C302266-_____**	66"
22"	**FW28C302272-_____**	72"
22"	**FW28C302278-_____**	78"
22"	**FW28C302284-_____**	84"
22"	**FW28C302290-_____**	90"
22"	**FW28C302296-_____**	96"

KEWAUNEE

Adjustabench Electronic Up/Down Bench

Adjustabench Part Number Explanation

AB61R923036

System Type
AB = Adjustabench

Configuration
21 = Shelf
61 = Workstation

Construction {Depends on Selected Config}
S = Shelf w/ 1 Lip }Shelves
R = Kemresin }Workstations

Length {Depends on Selected Config}
Workstations{36" - 48" - 60" - 72"
Shelves{ 48" - 60" - 72"

Depth {Depends on Selected Config}
Workstations{30" – 36"
Shelves{ 12" – 18"

Height {Depends on Selected Config}
Workstations{92" – 44"
Shelves{ 01"

Low Column | High Column

Example:
AB61R443648

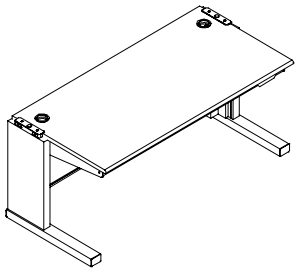

Example:
AB61R923648

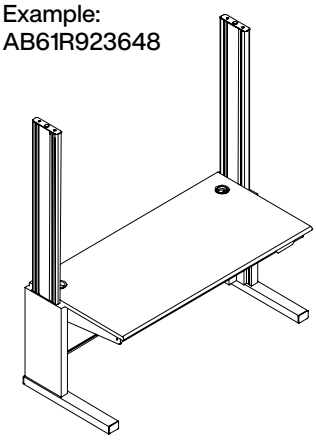

Shelves

Example:
AB21S011248

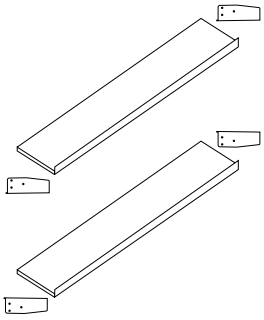

Shelf Brackets can be flipped to mount above or below shelf.

Shelves come with one shelf lip, as standard.

Load Ratings — Assembly Load Maximums

High Column Workstation

Work Surface Frame: 1000lb
(includes work surface and suspended storage)

Shelving: (each) ..... 40lb per sqft

Low Column Workstation

Work Surface Frame: 1000lb
(includes work surface and suspended storage)

Adjustabench Electronic Up/Down Bench

Steel Suspended Drawer Units

Steel Suspended Drawer Units are designed to hang beneath 36" deep Adjustabench frames. They are available in steel construction only and are furnished complete with all required mounting hardware.

Steel Suspended Drawer Units may be stacked to create multiple drawer unit assemblies.

Note: Last four digits of part number designates drawer head style and pull selection. See Steel furniture catalog for full explanation. Actual product may vary slightly from catalog illustration due to style and hardware selection.

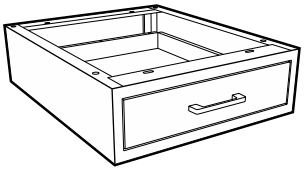

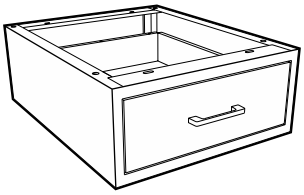

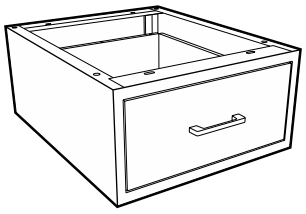

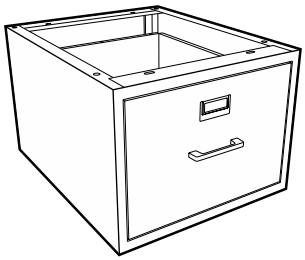

5½" High Drawer Unit	L
D00C062215N____	15"
D00C062218N____	18"
D00C062221N____	21"
D00C062224N____	24"
Overall Dimensions	
Overall Height	5½"
Overall Depth	22"
Drawer Head Height	3¾"
Inside Dimensions	
Height/Clearance	2⅜"
Front-to-back	18"

7½" High Drawer Unit	L
D00C082215N____	15"
D00C082218N____	18"
D00C082221N____	21"
D00C082224N____	24"
Overall Dimensions	
Overall Height	7½"
Overall Depth	22"
Drawer Head Height	5 11/16"
Inside Dimensions	
Height/Clearance	4 7/16"
Front-to-back	18"

9" High Drawer Unit	L
D00C092215N____	15"
D00C092218N____	18"
D00C092221N____	21"
D00C092224N____	24"
Overall Dimensions	
Overall Height	9"
Overall Depth	22"
Drawer Head Height	7⅛"
Inside Dimensions	
Height/Clearance	5⅞"
Front-to-back	18"

File Drawer Unit	L
D00C132215N____	15"
D00C132218N____	18"
D00C132221N____	21"
D00C132224N____	24"
Overall Dimensions	
Overall Height	13¼"
Overall Depth	22"
Drawer Head Height	11½"
Inside Dimensions	
Height/Clearance	10¼"
Front-to-back	18"

KEWAUNEE

Ceiling Service Panel

Features:

- Designed to integrate into common ceiling grids for delivering plumbing, electrical, and data services to the lab bench
- Fits in standard 2' x 2' and 2' x 4' ceiling grids
- Electrical devices are UL listed.
- Available in all standard powder coat finish colors
- May be customized to meet your project requirements
- Accommodates multiple lab services including:
  - Common gases, air, vacuum, and water
  - High purity and special gases
  - Power and data
- Accepts multiple fitting options including:
  - Standard or fine control valves
  - Pressure gauges and regulators
  - Quick-connect fittings
  - Communication and data outlets
  - Electrical service outlets

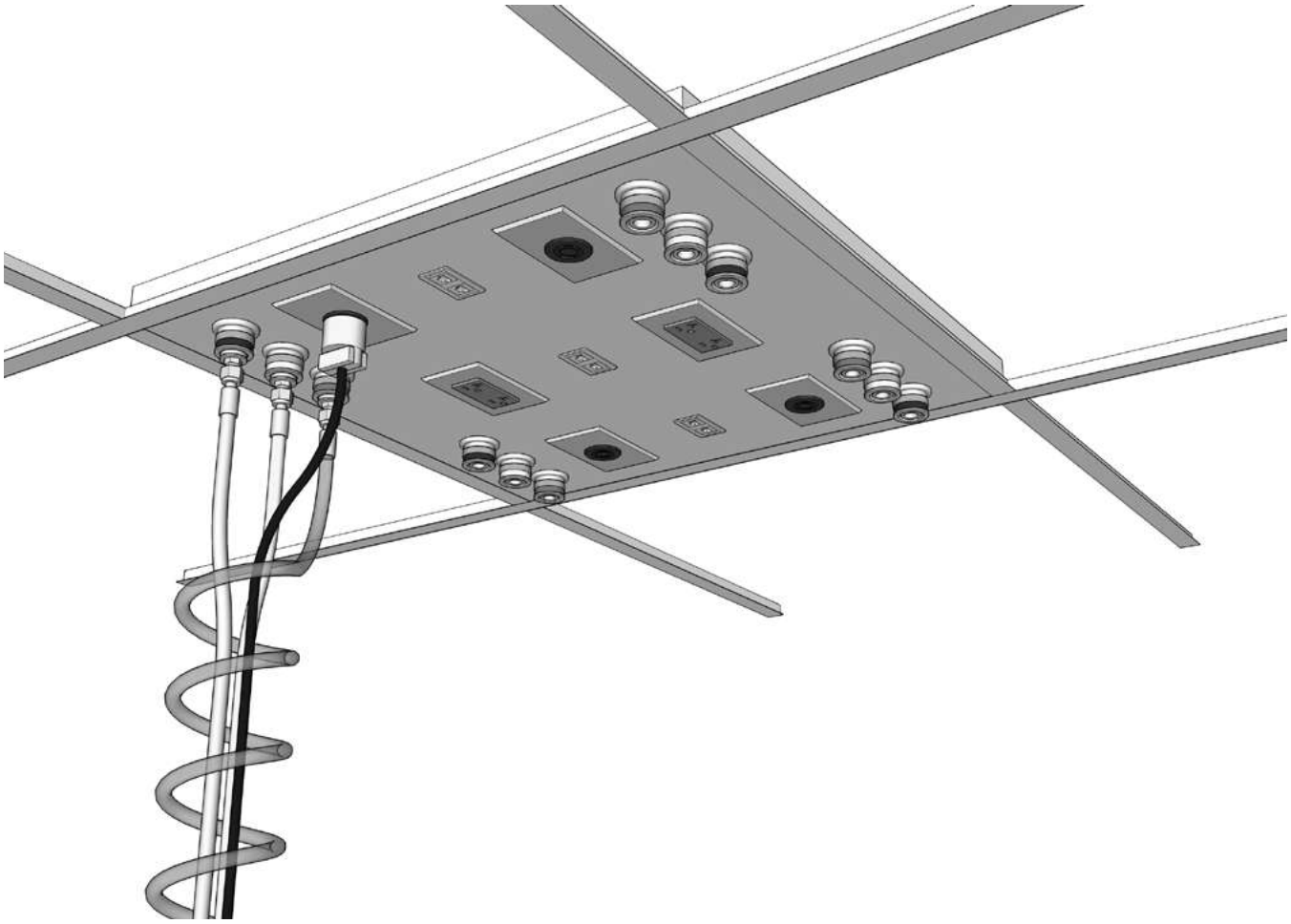

Ceiling Service Panel & Accessories

Ceiling Service Panels are fabricated from powder coat 12 gauge steel in two sizes to fit standard ceiling grid. They can be punched to accept most electrical, data, or service fittings. **Fittings and Fixtures must be ordered separately**

Electrical Fixtures are furnished complete with device, box and cover plate and are supplied loose, uninstalled.

Power Cords are required to carry power from the overhead service carriers to the support frame. The SJ 12/3 and SJ 12/4 cords are available in various configurations. Power Cord color is specified by adding (**BLK**) or -(**WHT**) to the end of the part number to signify Black or White respectivly. Example: **W-5621-36-WHT**

24" x 24" Ceiling Service Panel

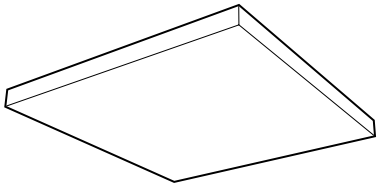

Part Number	Dimensions (HxDxL)
SC10M022424	1½" x 24" x 24"

24" x 48" Ceiling Service Panel

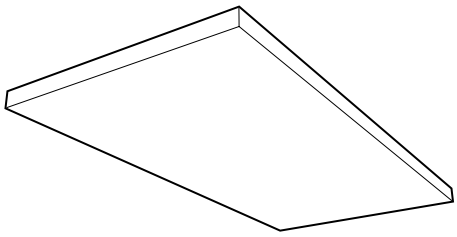

Part Number	Dimensions (HxDxL)
SC10M022448	1½" x 24" x 48"

Electrical Fixtures

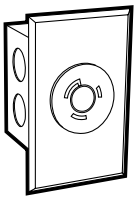

Twist-lock
Single-circuit 20 amp

Part Number	Color
0620-1K	Black

NEMA L5-20 3-wire, specification grade, 120 VAC, 20 amp, single receptacle.

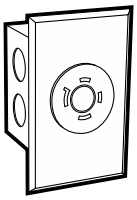

Dual-circuit
Twist-lock 20 amp

Part Number	Color
0624-1K	Black

NEMA L14-20 4-wire, specification grade receptacle. Capable of carrying two 120 VAC, 20 amp circuits.

Note: Check local electrical codes for compliance.

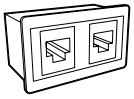

RJ45 8P8C
Data/Comm Outlet

Part Number	Category	Color
0720-0K-6	Cat-6	Black
0720-0V-6	Cat-6	Ivory
0720-0K-6a	Cat-6a	Black
0720-0V-6a	Cat-6a	Ivory

(2) RJ45 8P8C Outlets
Fits in 1¼" x 2" cutout.

Power Cords

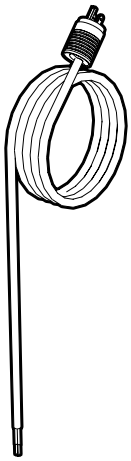

Single-circuit 3-wire
120 VAC — 20A — NEMA L5-20

Part Number	Length	Plug Type
W-5622-36	36"ATOP	Twist-Lock
W-5622-48	48"ATOP	Twist-Lock
W-5622-60	60"ATOP	Twist-Lock
W-5622-72	72"ATOP	Twist-Lock
W-5622-96	96"ATOP	Twist-Lock

Dual-circuit 4-wire
120 VAC — 20A — NEMA L14-20

Part Number	Length	Plug Type
W-5624-36	36"ATOP	Twist-Lock
W-5624-48	48"ATOP	Twist-Lock
W-5624-60	60"ATOP	Twist-Lock
W-5624-72	72"ATOP	Twist-Lock
W-5624-96	96"ATOP	Twist-Lock

KEWAUNEE

Ceiling Service Panel Accessories

Service Hoses are required to carry services from overhead service panel to the workstation column. They are available in reinforced PVC, polyurethane, or braided stainless steel. PVC hoses are available in 9 colors to match quick-connect color codes.

Specify PVC hose color by placing color code at end of hose part number.

Example: W-1133-36-**H2** for Orange hose

Extension Service Hoses

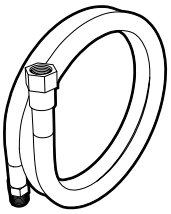

Reinforced PVC Hose

for Non-burning Gases
⅜" IPS Female Inlet
⅜" IPS Male Outlet

Length	Part Number
36"	**W-1133-36-H_**
48"	**W-1133-48-H_**
60"	**W-1133-60-H_**
72"	**W-1133-72-H_**
96"	**W-1133-96-H_**

Braided Stainless Steel Hose

for Natural & Reactive Gases
⅜" IPS Female Inlet
⅜" IPS Male Outlet

Length	Part Number
36"	**W-1233-36-H0**
48"	**W-1233-48-H0**
60"	**W-1233-60-H0**
72"	**W-1233-72-H0**
96"	**W-1233-96-H0**

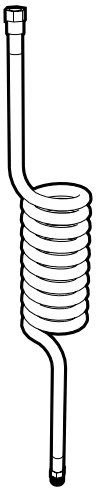

Coiled Polyurethane Hose

for Non-burning Gases
⅜" IPS Female Inlet
⅜" IPS Male Outlet

Length	Part Number
72"	**W-1533-72**

Hose/Cord Wrap

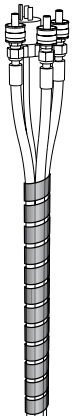

Poly Hose Wrap

Spiral wrap for bundling service lines and cords. Expandable from 1" to 2" diameter. May be trimmed to length with scissors.

L	Part Number	Color
36"	**F-8250-36-BK**	Black
36"	**F-8250-36-NA**	Natural
72"	**F-8250-72-BK**	Black
72"	**F-8250-72-NA**	Natural

Hose Colors

Color Code	Color	Color Code	Color
H1	Black	**H6**	White
H2	Orange	**H7**	Purple
H3	Green	**H8**	Brown
H4	Yellow	**H9**	Clear
H5	Blue		

Ceiling Service Panel Accessories

Keyed Quick-Connect Fittings are available for Hoses to ease service connection and disconnection during bench relocation. They are available in eight sizes (keys) which keeps service outlets from being connected to the wrong service.

Keyed Quick-connect Fittings

for use on Service Hoses

Male Hose Mount
3/8" IPS Male

Part Number	Key Color
W-8111-K1	Black
W-8111-K2	Orange
W-8111-K3	Green
W-8111-K4	Yellow
W-8111-K5	Blue
W-8111-K6	White
W-8111-K7	Purple
W-8111-K8	Brown

for use on Service Hoses

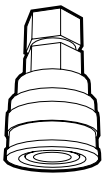

Female Hose Mount
3/8" IPS Female

Part Number	Key Color
W-9112-K1	Black
W-9112-K2	Orange
W-9112-K3	Green
W-9112-K4	Yellow
W-9112-K5	Blue
W-9112-K6	White
W-9112-K7	Purple
W-9112-K8	Brown

for use on Ceiling Service Panels

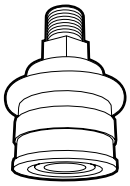

Female Panel Mount
3/8" IPS Male

Part Number	Key Color
W-9122-K1	Black
W-9122-K2	Orange
W-9122-K3	Green
W-9122-K4	Yellow
W-9122-K5	Blue
W-9122-K6	White
W-9122-K7	Purple
W-9122-K8	Brown

Keyed Quick-connect Fittings

Key Number & Color Code	Standard Service	Female Body Sleeve Dia.		Male Body Sleeve Dia.	
		in.	mm	in	mm
K1 Black	Helium	1.13	28.7	0.99	25.1
K2 Orange	Air	1.16	29.5	1.02	25.8
K3 Green	Water	1.19	30.2	1.05	26.6
K4 Yellow	Vacuum	1.22	31.0	1.08	27.4
K5 Blue	Gas	1.24	31.5	1.11	28.1
K6 White	—	1.28	32.5	1.14	28.9
K7 Purple	Argon	1.31	33.3	1.17	29.7
K8 Brown	Nitrogen	1.34	34.0	1.20	30.4

KEWAUNEE

Technical Information

Dimensions – FV10 & FV11 Single-sided 9" Column Workstation on Glides

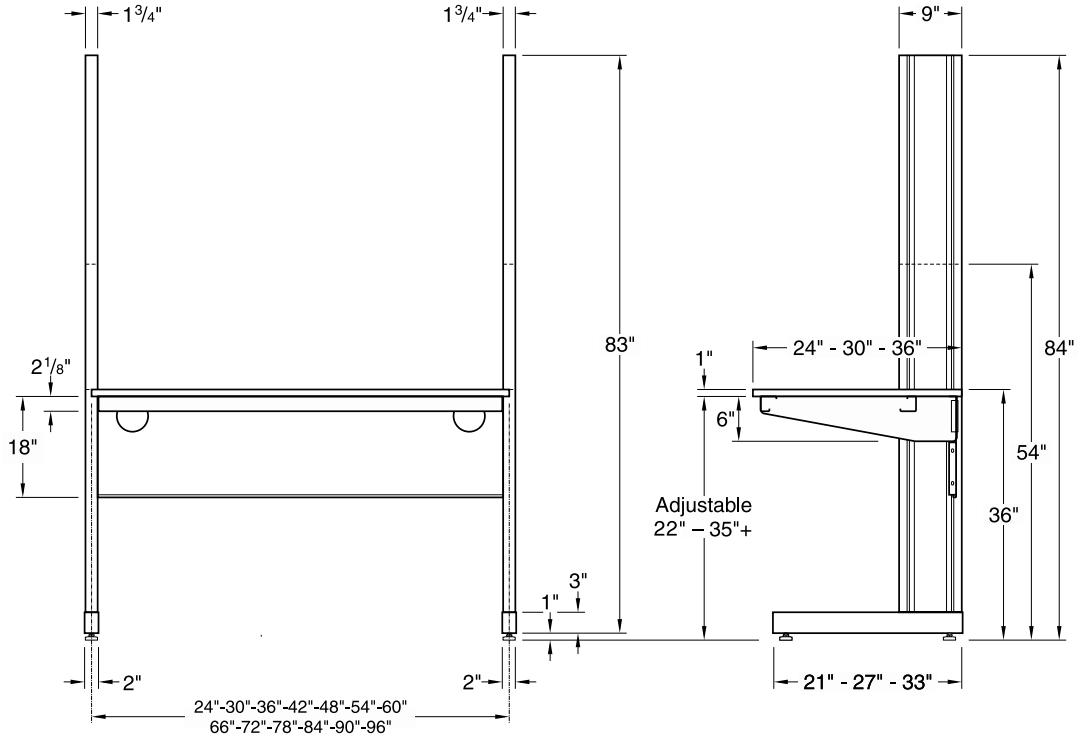

FV10MXXXXXX-00 Front Elevation

FV10MXXXXXX-00 End Elevation

Dimensions – FV10 & FV11 Single-sided 9" Column Workstation Casters

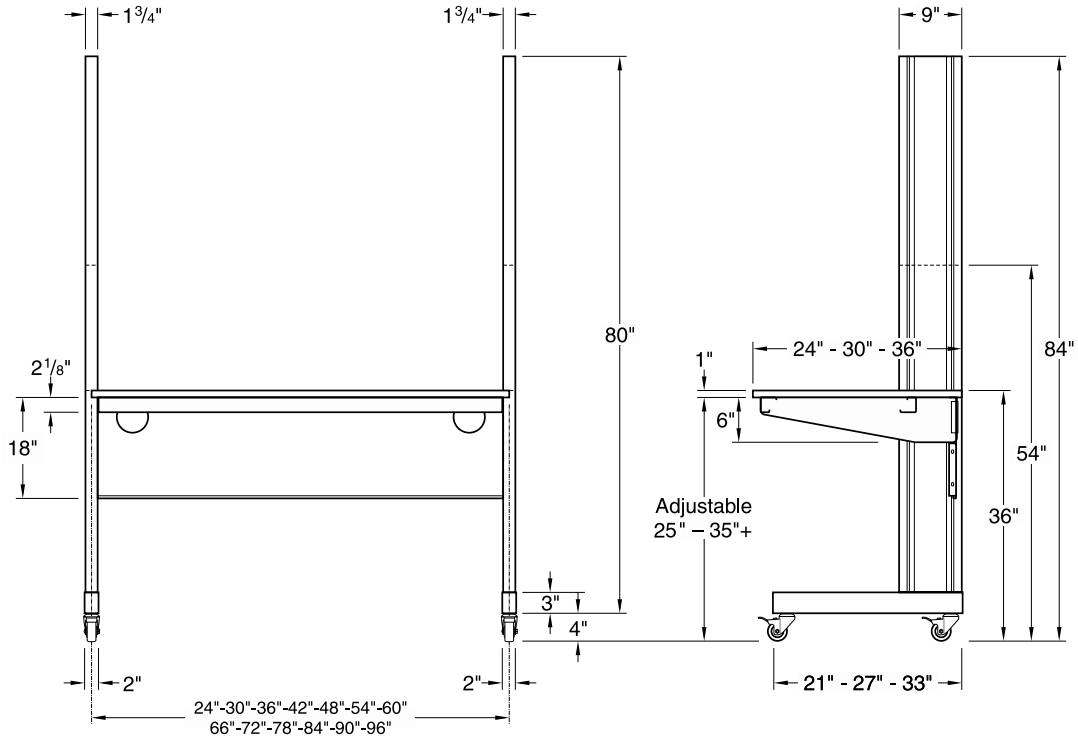

FV10MXXXXXX-01 & 02 Front Elevation

FV10MXXXXXX-01 & 02 End Elevation

Technical Information

Dimensions – FV30 & FV31 Single-sided 12" Column Workstation on Glides

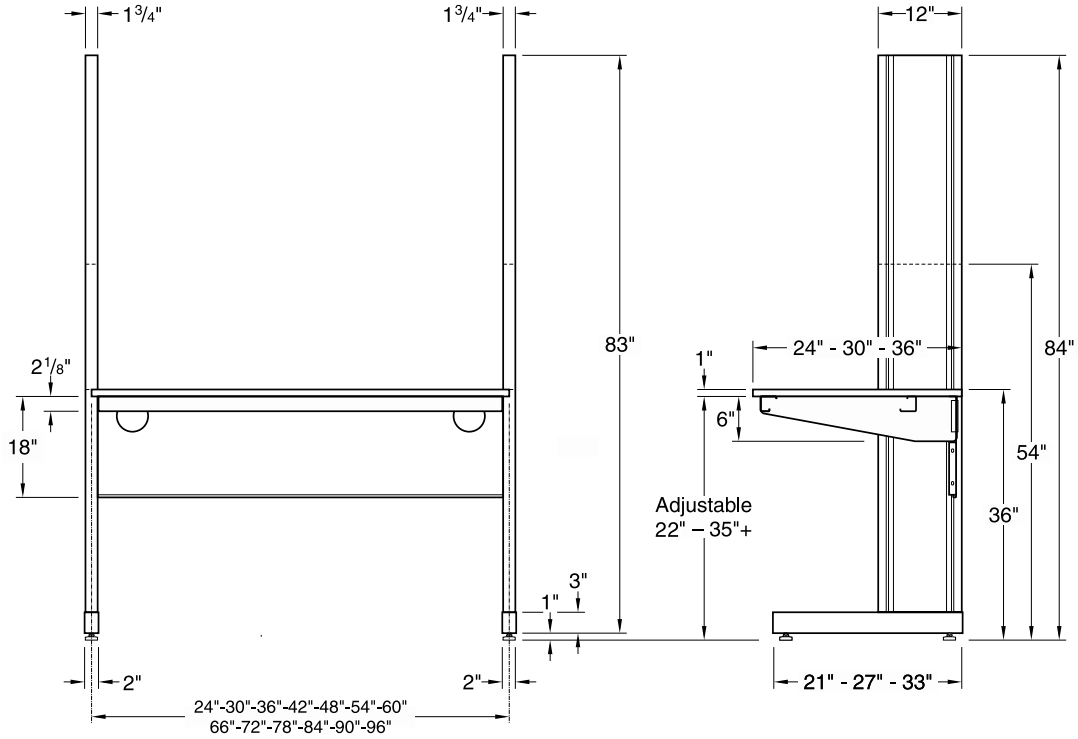

FV30MXXXXXX-00 Front Elevation

FV30MXXXXXX-00 End Elevation

Dimensions – FV30 & FV31 Single-sided 12" Column Workstation Casters

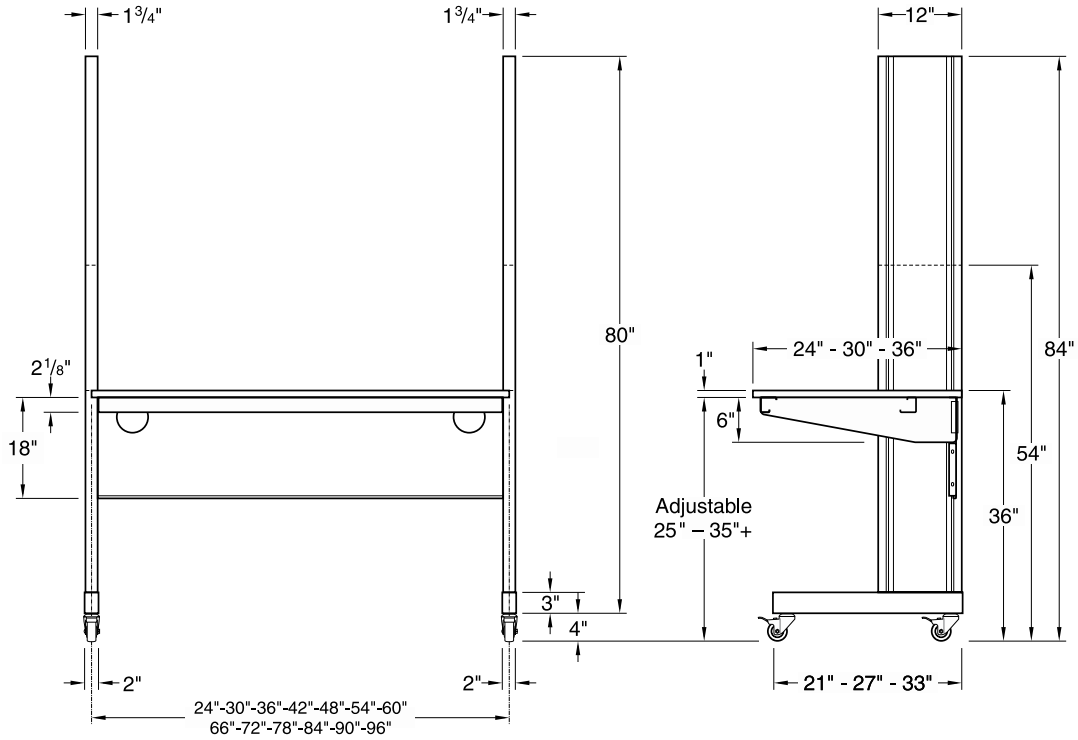

FV30MXXXXXX-01 & 02 Front Elevation

FV30MXXXXXX-01 & 02 End Elevation

KEWAUNEE

Technical Information

Dimensions – FV20 & FV21 Double-sided 9" Column Workstation on Glides

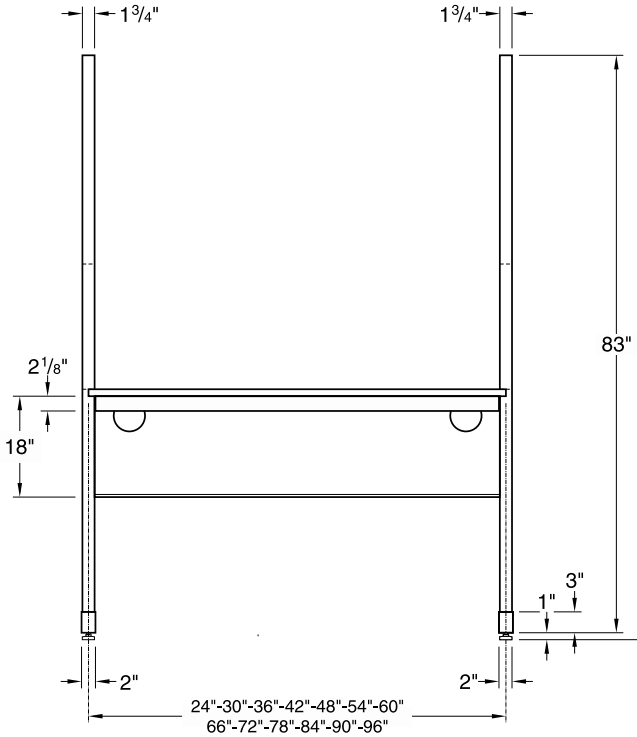

FV20MXXXXXX-00 Front Elevation

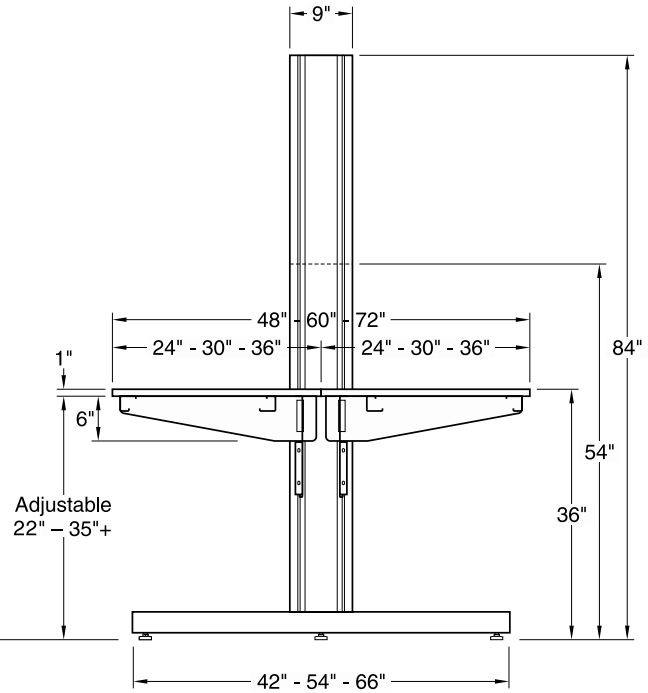

FV20MXXXXXX-00 End Elevation

Dimensions – FV20 & FV21 Double-sided 9" Column Workstation Casters

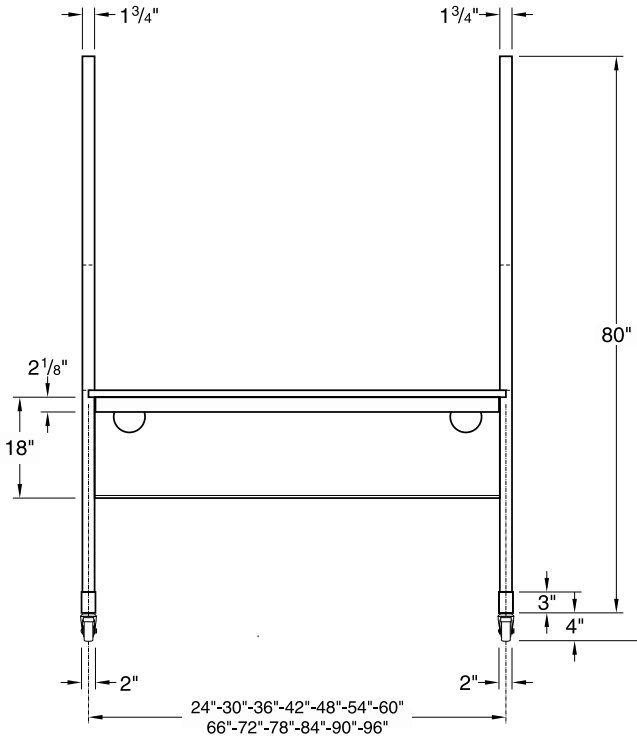

FV20MXXXXXX-01 & 02 Front Elevation

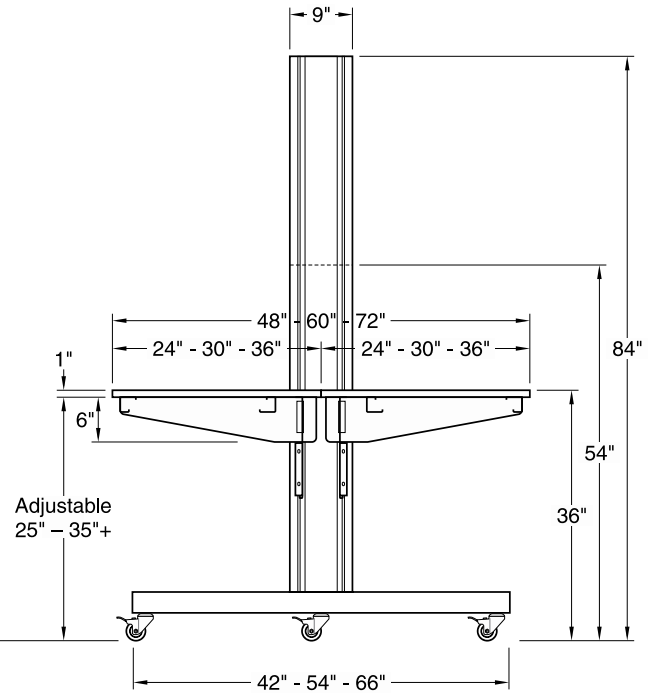

FV20MXXXXXX-01 & 02 End Elevation

Technical Information

Dimensions – FV40 & FV41 Double-sided 12" Column Workstation on Glides

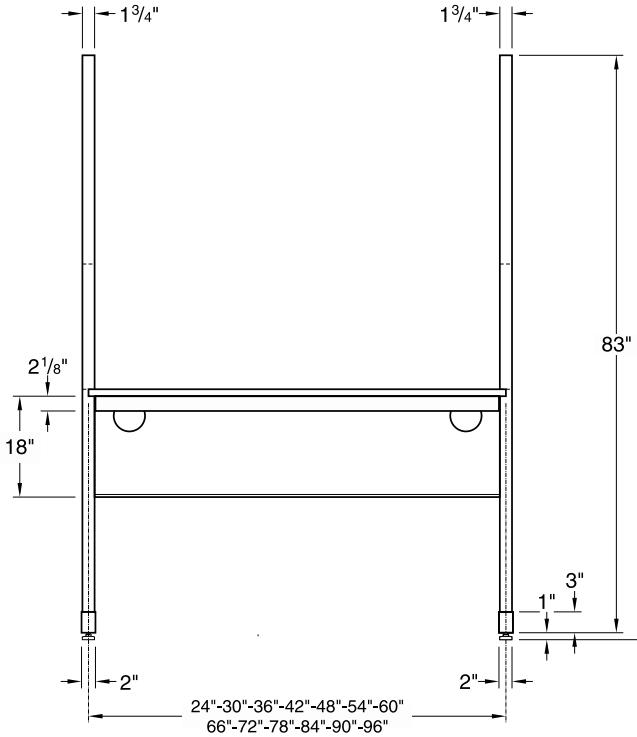

FV40MXXXXXX-00 Front Elevation

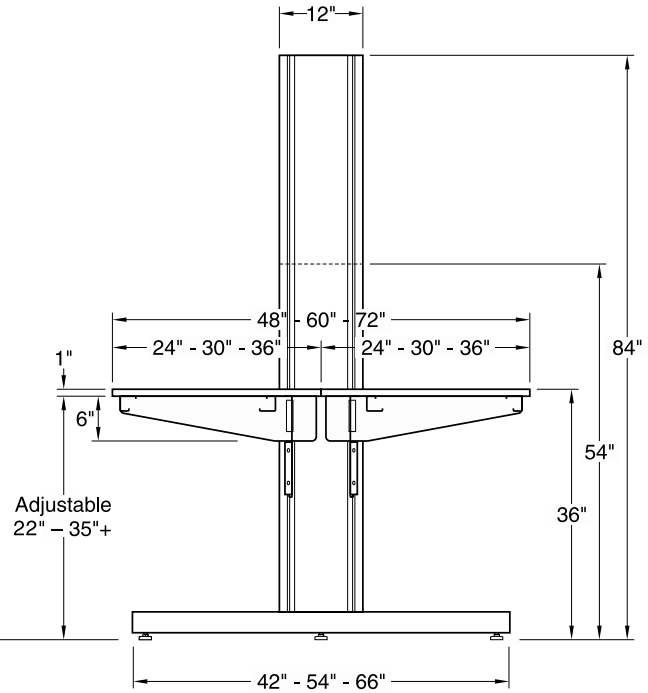

FV40MXXXXXX-00 End Elevation

Dimensions – FV40 & FV41 Double-sided 12" Column Workstation Casters

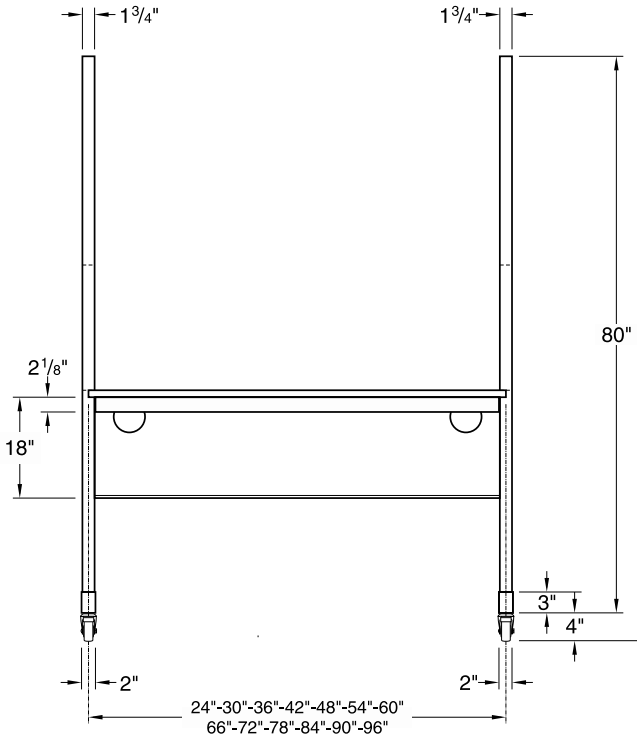

FV40MXXXXXX-01 & 02 Front Elevation

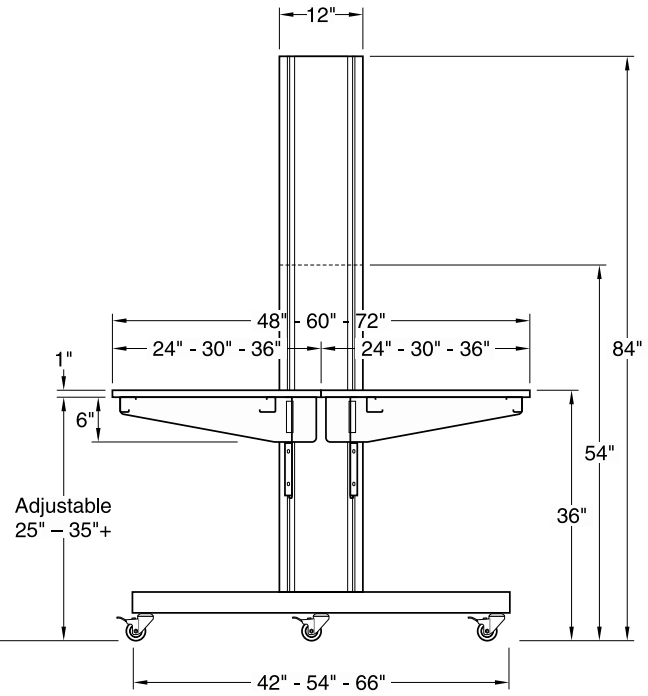

FV40MXXXXXX-01 & 02 End Elevation

KEWAUNEE

Technical Information

Dimensions – Single-sided Undermount Shelf Assemblies

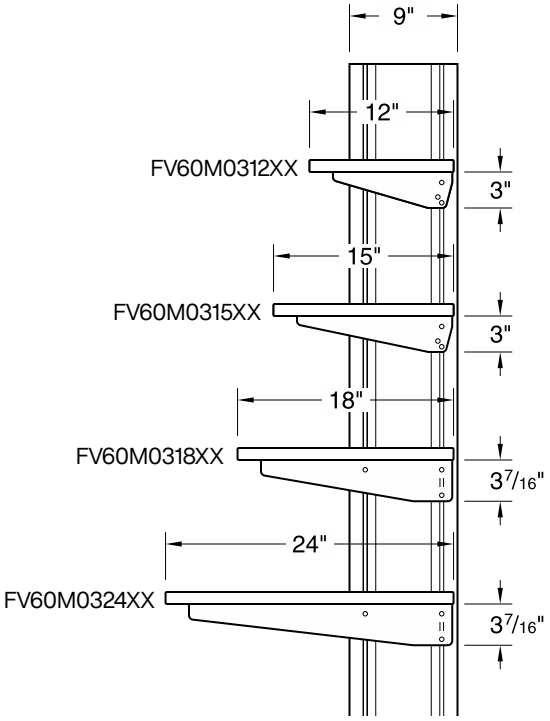

9" Column Section View

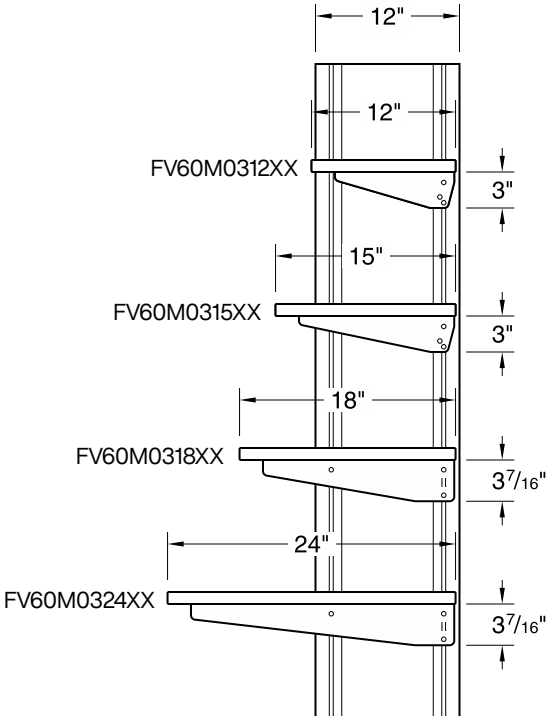

12" Column Section View

Dimensions – Single-sided Bookend Shelf Assemblies

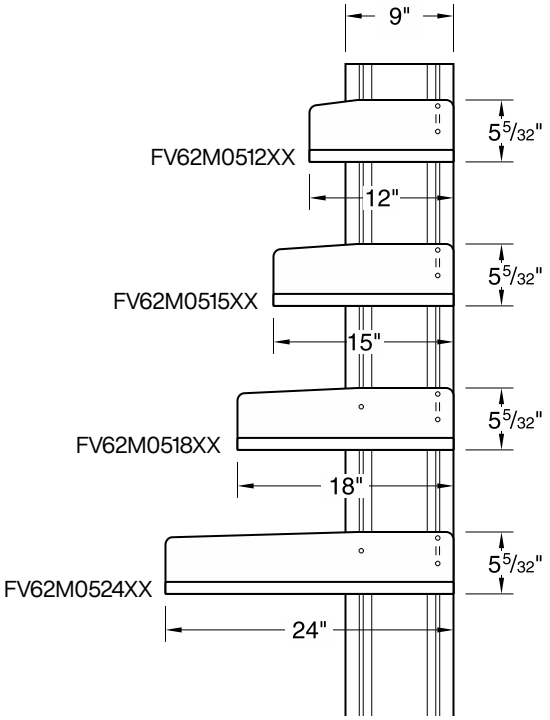

9" Column Section View

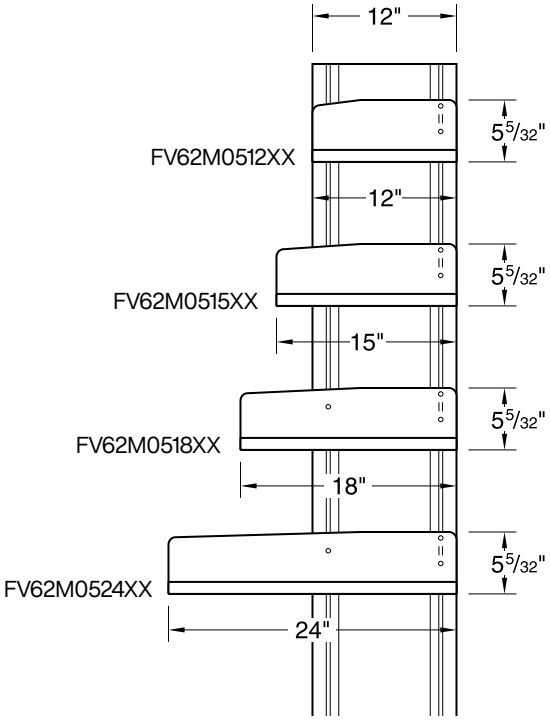

12" Column Section View

Technical Information

Dimensions – Double-sided Undermount Shelf Assemblies

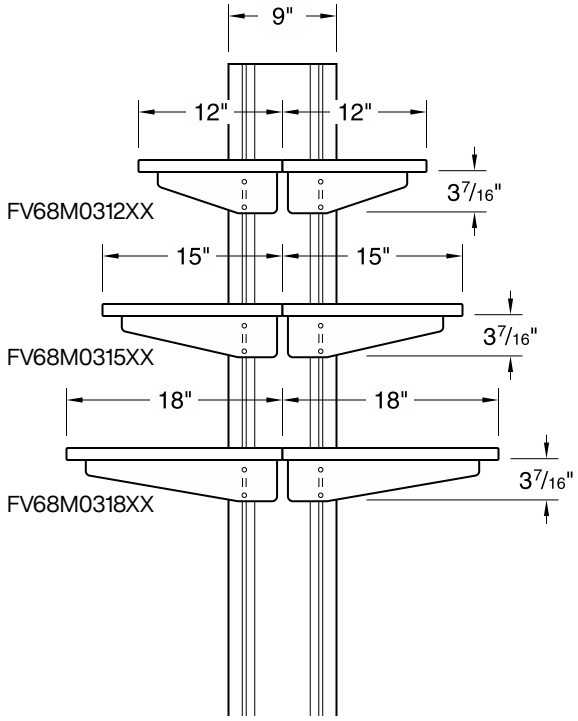

9" Column Section View

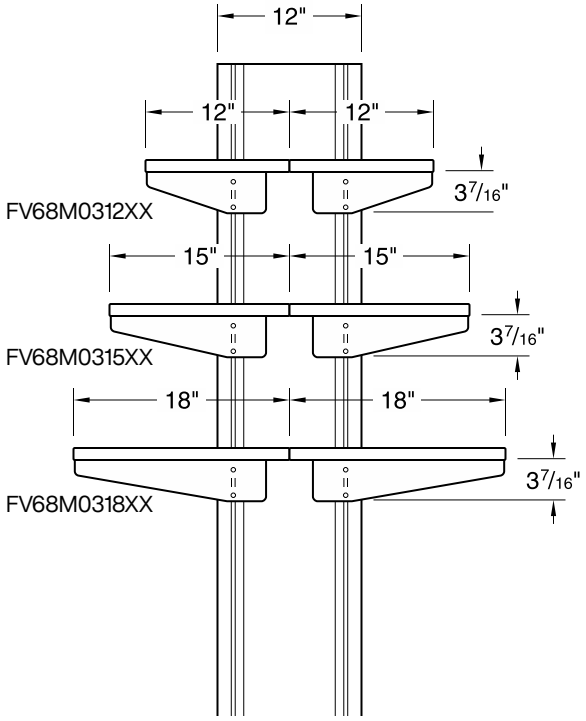

12" Column Section View

Dimensions – Double-sided Bookend Shelf Assemblies

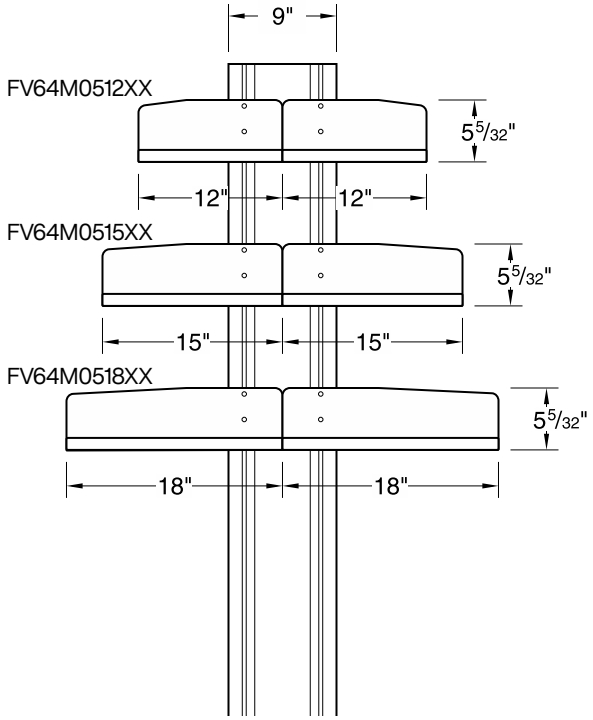

9" Column Section View

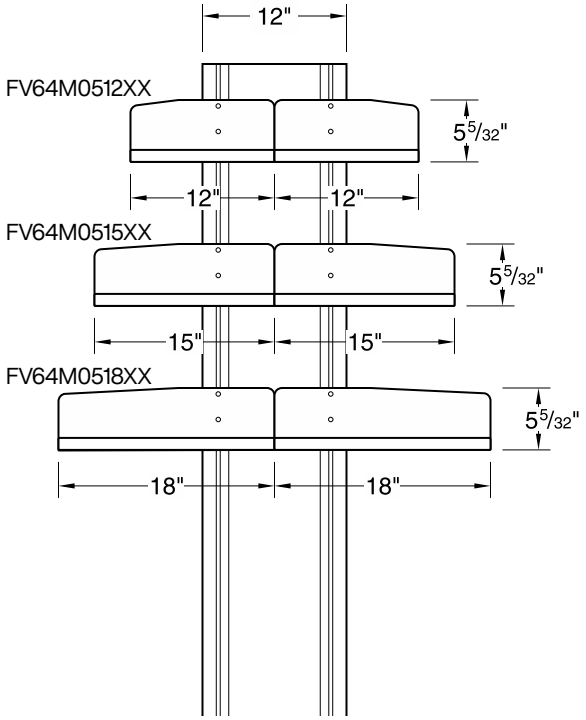

12" Column Section View

Technical Information

Dimensions – Center Undermount Shelf Assemblies

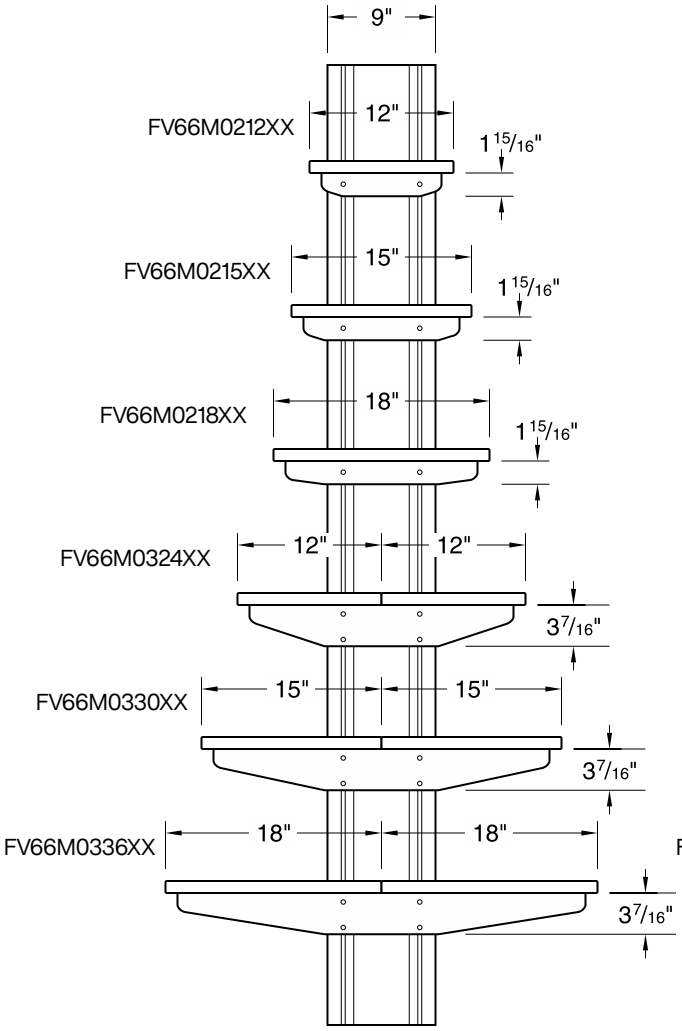

9" Column Section View

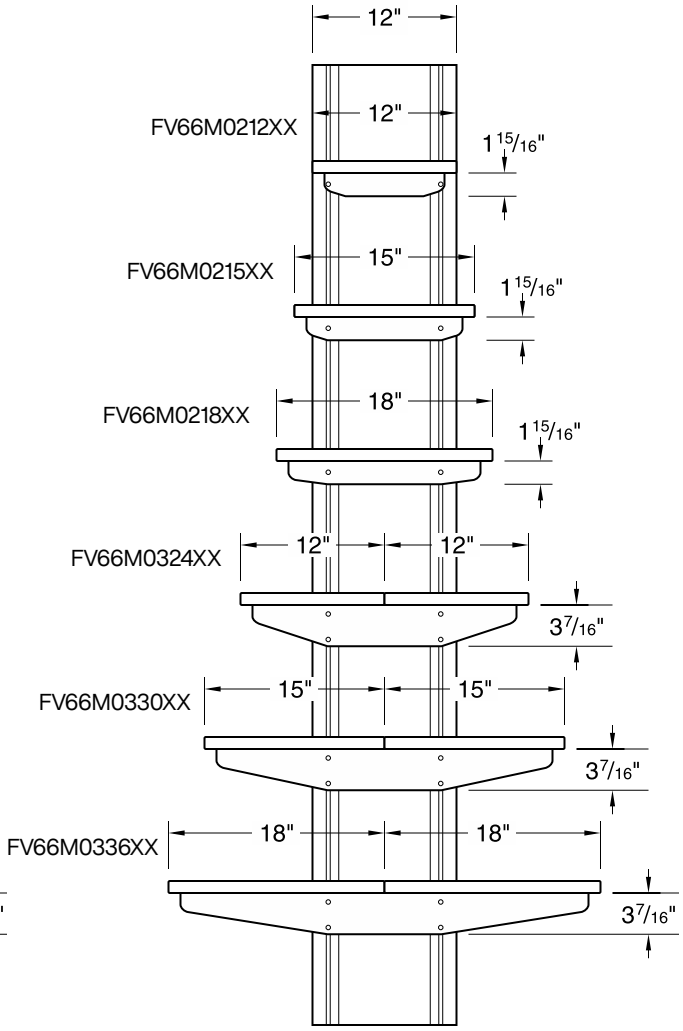

12" Column Section View

Dimensions – Back-to-Back Upper Storage Cabinets

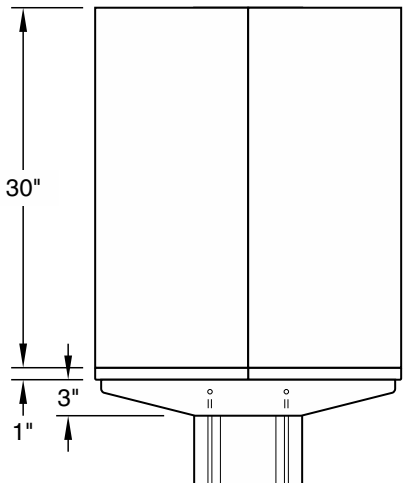

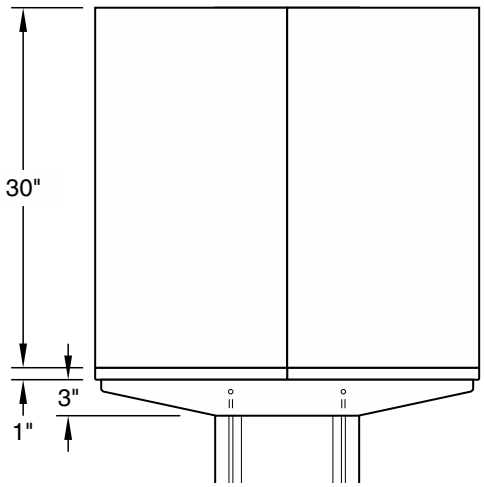

Technical Information

Dimensions – Upper Storage & Suspended Cabinets

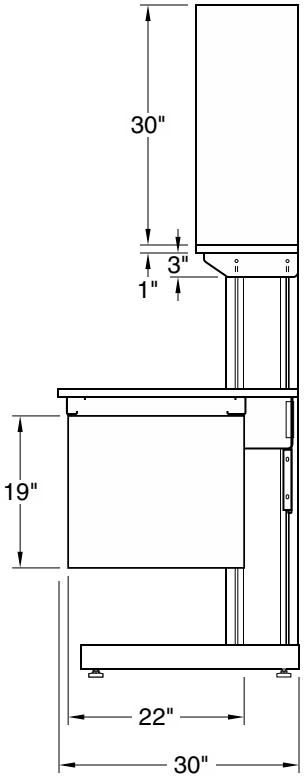

30" Deep Workstation

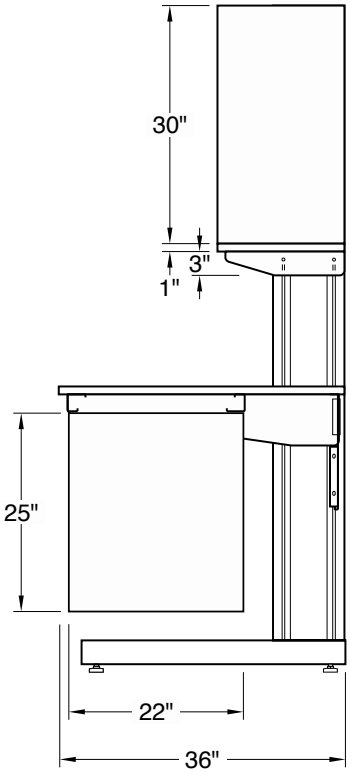

36" Deep Workstation

Dimensions – Mobile Cabinets

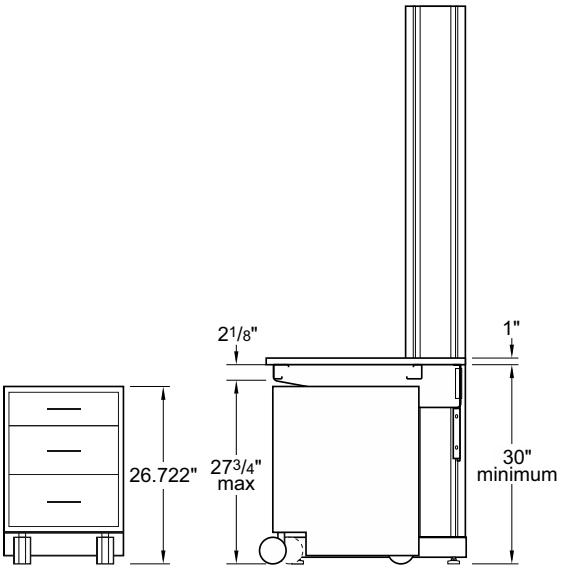

Sitting Height Mobile Cabinet

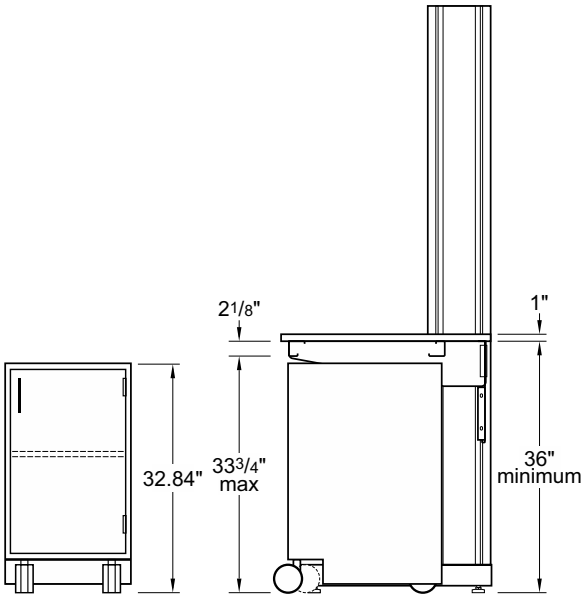

Standing Height Mobile Cabinet

KEWAUNEE

Typical Installations

Typical Installations

EVOLUTION

Column Systems

Kewaunee Scientific Corporation is dedicated to manufacturing high quality products for the laboratory marketplace. We offer **Total Laboratory Solutions, Innovative Designs, and Technological Expertise** with a worldwide distribution network to provide laboratories that are truly World Class.

Laboratory Products from Kewaunee®:

ALPHA® – Adaptable Casework System

ALPHA Columns – Expandable Workstations

ALPHA Overhead Carrier Systems

BasikBench® – Simple 4-Leg Benches or Tables

Element Bench – Efficient Benches with Plumbed Posts

Enterprise® – Free-Standing Workstations

Evolution® – Column Based Workstations

Kemresin® – Epoxy Resin Counters & Sinks

Kewaunee Matrix® – Educational Stations

Research Collection® – Steel Casework

Signature® Series – Wood Casework

Supreme Air® – Fume Hoods

For our complete product offering, specifications, catalogs, brochures, case studies, and dealer list, go to kewaunee.com, or contact your local sales representative directly.

Kewaunee Scientific Corporation
P.O. Box 1842 ▪ Statesville, NC 28687-1842
704-873-7202 ▪ kscmarketing@kewaunee.com ▪ kewaunee.com

Kewaunee Labway India Pvt. Ltd.
No. CA-9A, 2nd Floor, Jigani Link Road
Jigani, Bangalore 562 106, India
Phone: 9180-27826725 ▪ Fax: 9180-27826724
Web Site: www.kewaunee.in

Kewaunee Labway Asia Pte. Ltd.
194 Pandan Loop, #06-22
Pantech Business Hub, Singapore 128 383
Phone: 65-6773-0288 ▪ Fax: 65-6773-2322

Kewaunee, Alpha, BasikBench, Enterprise, Evolution, Kemresin, Kewaunee Matrix, Research Collection, Signature, and Supreme Air are registered trademarks of Kewaunee Scientific Corporation

KEWAUNEE®

© Copyright 2025

Digital Version 10/13/25