ALPHA

Flexible Systems

KEWAUNEE®

Alpha

Flexible Laboratory Systems

KEWAUNEE

Alpha

Innovative Designs

Ultimate Flexibility for Laboratories

Kewaunee's Alpha family of products is designed to meet the needs of the modern laboratory where flexibility and adjustability are essential. Alpha uses fixed modules to support Worksurfaces, casework, shelving, carts, and accessories. Components allow for customization of each workstation. The Alpha system integrates with horizontal and vertical services including plumbing, power, and data. The Alpha family offers a complete offering of interchangeable components.

Modular Workstations

- Self-supporting tables
- Double-sided or single-sided
- Adjustable height workstations
- Integrated shelving systems
- Pre-plumbed services

Mobile Carts

- Convenient and mobile
- Available in standard lengths
- Large diameter, heavy duty casters or glides available
- Accepts many standard components

Service Carriers

- Ceiling Panels
- Overhead Service Enclosures
- Overhead Service Manifolds

KEWAUNEE

ALPHA System

Table of Contents

Wall Hanging System 6
Uprights & Rails 7
Cover Panels 8
Peninsula Modules 9

6" Partition Modules 10
Standard Partition Modules 11
Partition Modules with Electrical Cutouts 13
Partition Modules with Paneled Upper Carrier 15
Ceiling Supports 17
Corner Column Modules 18
Fillers 19

12" Island Structural Modules 20
Standard Island Modules 21
Island Modules with Electrical Cutouts 23
Island Modules with Paneled Upper Carrier 25
Service Tunnels & Wire Raceways 27
Vertical Service Distribution 28
Enclosure Panels 29
Service Drop Enclosure 30
Fillers 31

3" Wall Structural Modules 32
Standard Wall Modules 33
Wall Modules with Electrical Cutouts 35
Wall Modules with Paneled Upper Carrier 37

9" Wall Structural Modules 40
Standard Wall Modules 41
Wall Modules with Electrical Cutouts 43
Wall Modules with Paneled Upper Carrier 45
Fillers 47

Add-On Fixed Furniture Upper Carriers 48

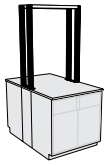

Corner & Peninsula Column Modules 49

Adjustable Module Shelving 51
Core Shelving 52
Top Shelf Assemblies 52
Module Shelf Assemblies 53
Pass-Thru Shelf Assemblies 54
Shelf Parts 56
Shelf Lips 58
Task Lighting 58

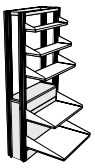

Adjustable Height Worksurface Frames 59
23" Deep Frames 59
29" Deep Frames 60
Corner Frames 61

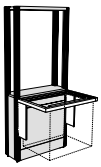

Table of Contents (continued)

Worksurface & Module Tops.....62
Module Ledges.....63
Worksurface Tops.....67
Worktop and Ledge Materials.....70
Custom Worksurface Tops & Ledges.....71

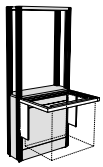

Alpha System Carts.....73
Cart Frames.....74
Electrical Service Strip.....75
Modesty Panels.....75
Worksurface Tops.....75
Heavy Duty Cart.....76

Tables.....77
Free-Standing Adjustable Height Tables.....77

Alpha Columns.....78
Double-Sided Module.....79
Single-Sided Module.....81
Double-Sides Worksuface Top.....83
Single-Sided Worksurface Top.....85
Shelves.....87
Service Tunnel.....90
Worksurface Frame.....90
Service Piping.....91

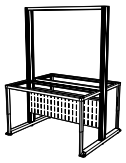

Steel and Wood Cabinets Information.....93

Alpha System Service Carriers.....95
Service Enclosure.....96
Ceiling Service Panel.....98
Service Carrier Accessories.....99

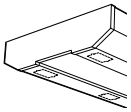

Alpha System Accessories.....100
Tackboards and Markerboards.....102
Hanging Brackets and Rails.....102
Kemresin Laboratory Pegboards.....103
Stainless Steel Laboratory Pegboards.....103
Kemresin Balance Table.....104
Stainless Steel Cart.....104

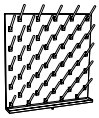

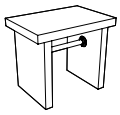

Technical Information.....105
Load Ratings – Component Load Maximums.....105
Dimensions — Structural Module.....112
Dimensions — Modular Service Carrier.....119

Typical Installations.....121

KEWAUNEE

Wall Hanging System

Features:

- Wall Hanging System provides support for a broad combination of accessories, including:
  - adjustable Worksurface frames
  - hanging cabinets — upper and lower
  - adjustable shelving
  - lighting
  - tackboards and markerboards
  - pegboards
- Double Slotted Vertical Uprights match uprights of Alpha modules allowing component interchangeability.
- Available full-height or may be used above floor mounted furniture.
- System design allows shelving to be suspended both above and below the Worksurface.
- Wall Hanging System provides support where no plumbing services are required.
- Vertical Uprights mount easily on 8 foot support rails at 6" intervals. Rails may be easily cut to required lengths.
- Available with easy to remove cover panels — either painted steel or fabric covered.

SEFA 10 | Class 2 – Configuration 1 – Category 1

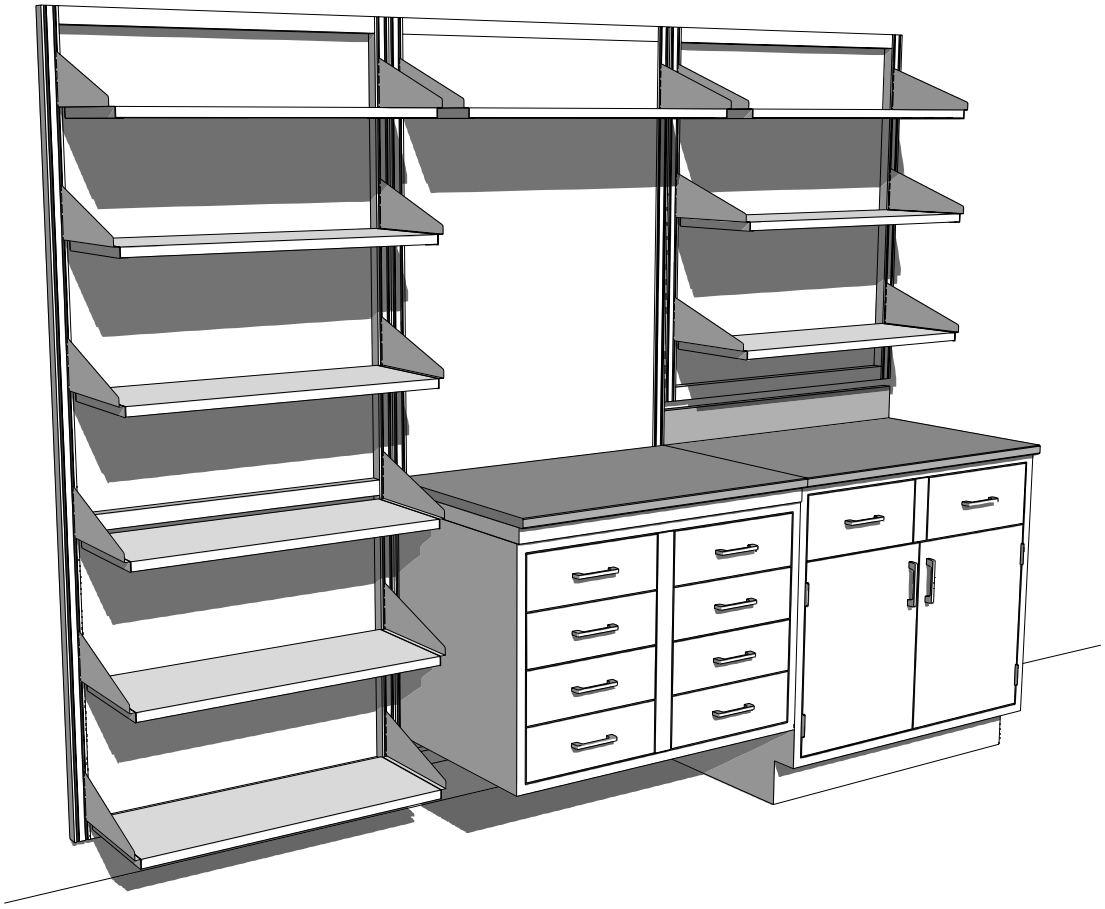

Wall Hanging System Uprights & Rails

Specifications:

Vertical Uprights are 1¼" deep and either 79" or 42" high. They are manufactured with a double-slotted face with slots on 1" centers. They are designed to be mounted between two Support Rails to hold accurate spacing.

Support Rails are available in 8 foot lengths and may be cut to the required length. Support Rails are notched on 6" centers to accept the Vertical Uprights.

Support Rail Covers are required to finish the assembly and must be ordered in pairs to match the Vertical Upright spacing.

Optional Center Rails may be ordered to provide a horizontal member at counter top height. They should be sized to match the Vertical Upright spacing.

Full Height Wall Suspension System

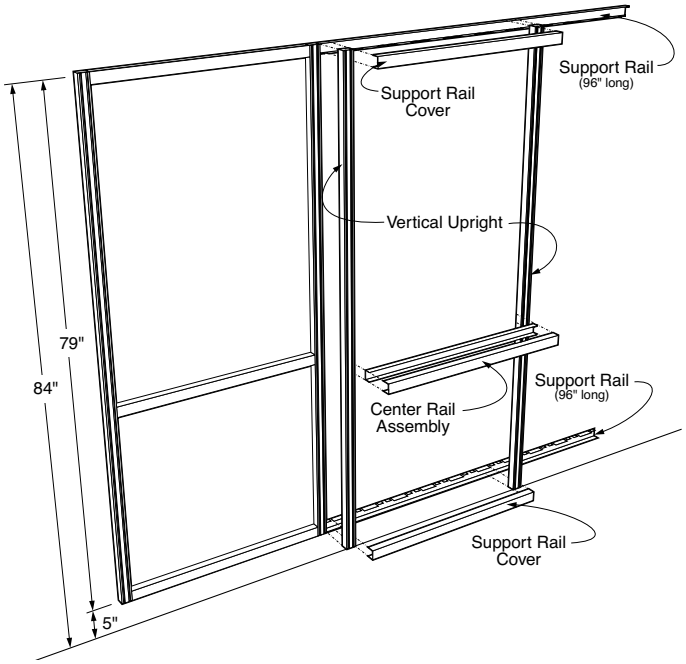

Vertical Upright		
F10M790102N	79"H	pair

Support Rail		
F11M020196S	96"L	each

Support Rail Covers		
F11M030124P	24"L	pair
F11M030130P	30"L	pair
F11M030136P	36"L	pair
F11M030142P	42"L	pair
F11M030148P	48"L	pair
F11M030154P	54"L	pair
F11M030160P	60"L	pair
F11M030166P	66"L	pair
F11M030172P	72"L	pair

Optional Center Rail Assembly		
F11M020124C	24"L	each
F11M020130C	30"L	each
F11M020136C	36"L	each
F11M020142C	42"L	each
F11M020148C	48"L	each
F11M020154C	54"L	each
F11M020160C	60"L	each
F11M020166C	66"L	each
F11M020172C	72"L	each

Above Countertop Wall Suspension System

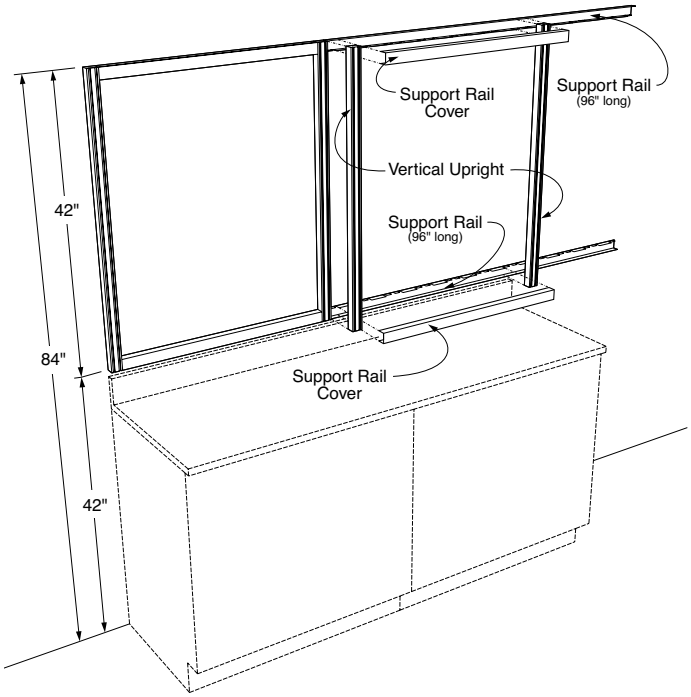

Vertical Upright		
F10M420102N	42"H	pair

Support Rail		
F11M020196S	96"L	each

Support Rail Covers		
F11M030124P	24"L	pair
F11M030130P	30"L	pair
F11M030136P	36"L	pair
F11M030142P	42"L	pair
F11M030148P	48"L	pair
F11M030154P	54"L	pair
F11M030160P	60"L	pair
F11M030166P	66"L	pair
F11M030172P	72"L	pair

KEWAUNEE

Wall Hanging System Cover Panels

Specifications:

Cover Panels are available in either painted steel or fabric covered cellulose board. They are designed to mount flush with the face of the Vertical Uprights to provide a smooth, even wall surface. Each panel is furnished complete with mounting brackets and hardware to allow it to easily snap into place without use of tools.

Cover Panels for the Full Height Wall Suspension System are separated into Upper and Lower Panels and require the Optional Center Rail Assembly. They may be used individually or as a pair. The Above Countertop Wall Suspension System uses a single Cover Panel. Size Cover Panels to match the Vertical Upright spacing.

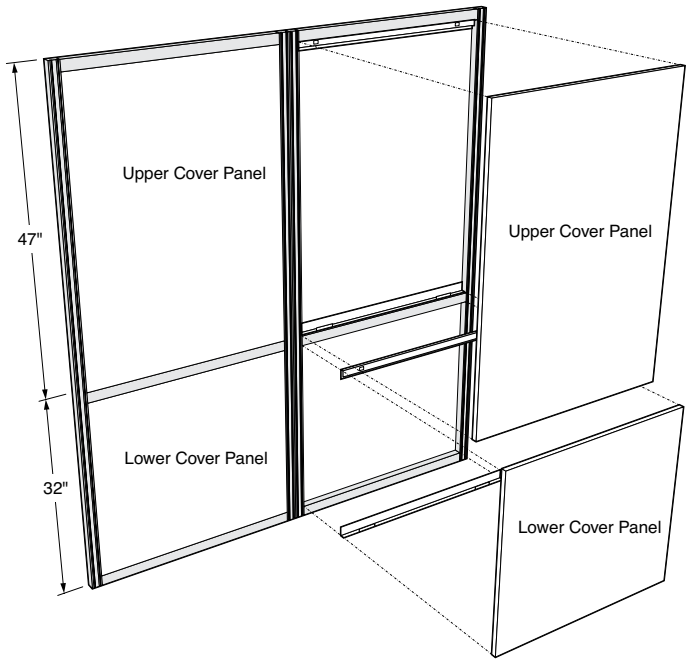

Upper Cover Panels for 79" Uprights

Steel Panels	Fabric Panels	(45⅜" High)	
F76M470124N	**F76F470124N**	**24"L**	**each**
F76M470130N	**F76F470130N**	**30"L**	**each**
F76M470136N	**F76F470136N**	**36"L**	**each**
F76M470142N	**F76F470142N**	**42"L**	**each**
F76M470148N	**F76F470148N**	**48"L**	**each**
F76M470154N	**F76F470154N**	**54"L**	**each**
F76M470160N	**F76F470160N**	**60"L**	**each**
F76M470166N	**F76F470166N**	**66"L**	**each**
F76M470172N	**F76F470172N**	**72"L**	**each**

Lower Cover Panels for 79" Uprights

Steel Panels	Fabric Panels	(28¾" High)	
F76M320124N	**F76F320124N**	**24"L**	**each**
F76M320130N	**F76F320130N**	**30"L**	**each**
F76M320136N	**F76F320136N**	**36"L**	**each**
F76M320142N	**F76F320142N**	**42"L**	**each**
F76M320148N	**F76F320148N**	**48"L**	**each**
F76M320154N	**F76F320154N**	**54"L**	**each**
F76M320160N	**F76F320160N**	**60"L**	**each**
F76M320166N	**F76F320166N**	**66"L**	**each**
F76M320172N	**F76F320172N**	**72"L**	**each**

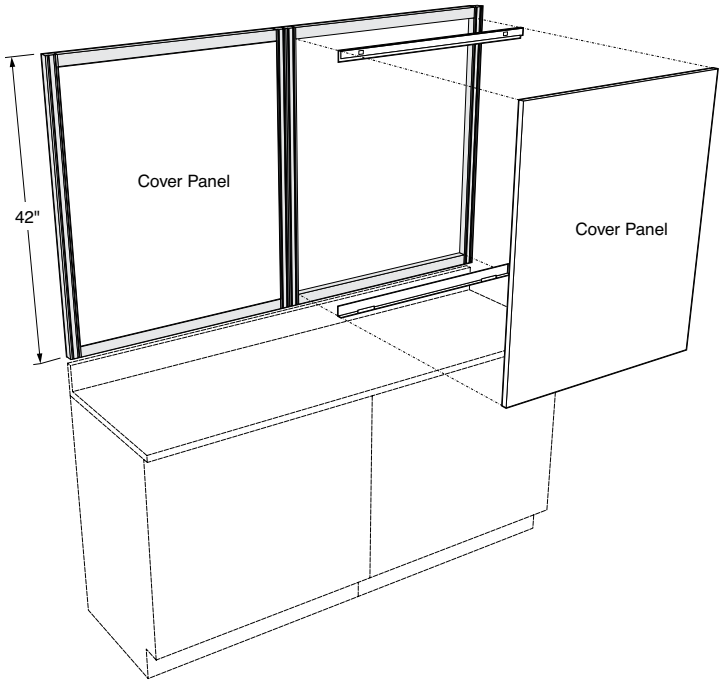

Cover Panels for 42" Uprights

Steel Panels	Fabric Panels	(38¾" High)	
F76M420124N	**F76F420124N**	**24"L**	**each**
F76M420130N	**F76F420130N**	**30"L**	**each**
F76M420136N	**F76F420136N**	**36"L**	**each**
F76M420142N	**F76F420142N**	**42"L**	**each**
F76M420148N	**F76F420148N**	**48"L**	**each**
F76M420154N	**F76F420154N**	**54"L**	**each**
F76M420160N	**F76F420160N**	**60"L**	**each**
F76M420166N	**F76F420166N**	**66"L**	**each**
F76M420172N	**F76F420172N**	**72"L**	**each**

Wall Hanging System Peninsula Modules

Specifications:

Peninsula Modules allow 6" and 12" Island Modules to be joined to the Wall Hanging System. They are available in three heights, 36", 46", or 84" to match the 6" and 12" Island Structural Modules. Peninsula Modules are formed from cold rolled steel and are finished to match the adjacent modules, uprights and rails.

12" Island Peninsula Module

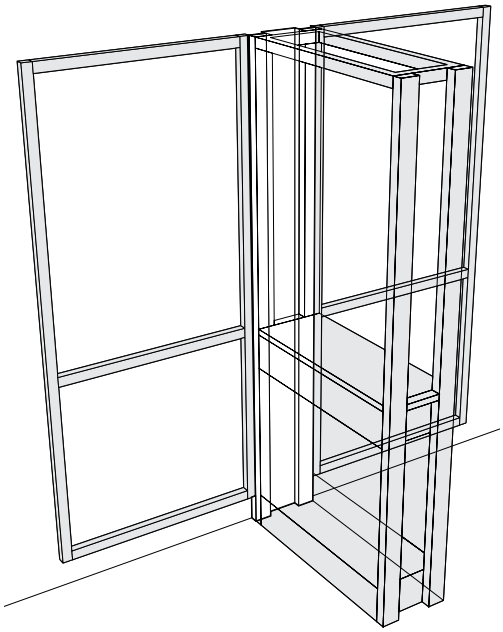

12" Peninsula Module

Height	Part Number
36"	**F42M360112N**
46"	**F42M460112N**
84"	**F42M840112N**

6" Peninsula Module

Height	Part Number
36"	**F46M360106N**
46"	**F46M460106N**
84"	**F46M840106N**

6" Partition Peninsula Module

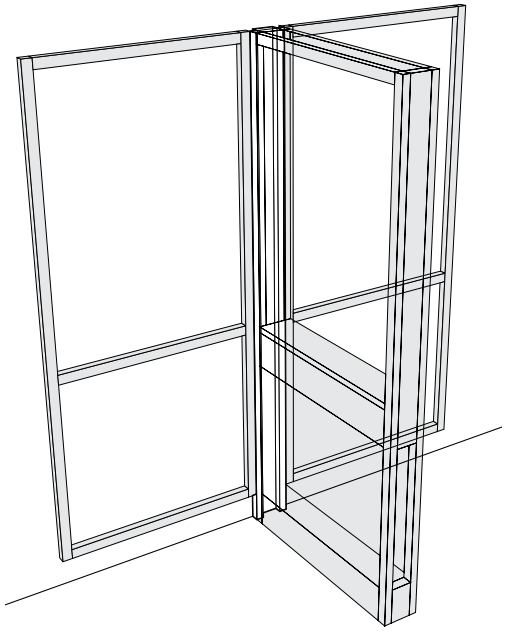

KEWAUNEE

6" Partition Modules

Features:

- 6" Partition Modules can be used as Island Modules, or as a Partition System
- 6" Partition Modules provide support for a wide combination of accessories, including:
  - adjustable Worksurface frames
  - adjustable tables
  - hanging cabinets — upper and lower
  - floor mounted cabinets
  - adjustable shelving
  - lighting
  - electrical and plumbing raceway
  - service drops
  - tack boards and marker boards
- 6" Partition Modules provide 3½" of service space and are built to receive standard pipe hangers for ease of installing service piping and electrical conduit.
- System design allows shelving to be suspended both above and below the Worksurface.
- Easy and positive structural alignment and attachment to adjacent modules.
- Available with easy to remove access panels. May be ordered without access panels for use with floor mounted base cabinets.

SEFA 10 | Class 5 – Configuration 2 – Category 2

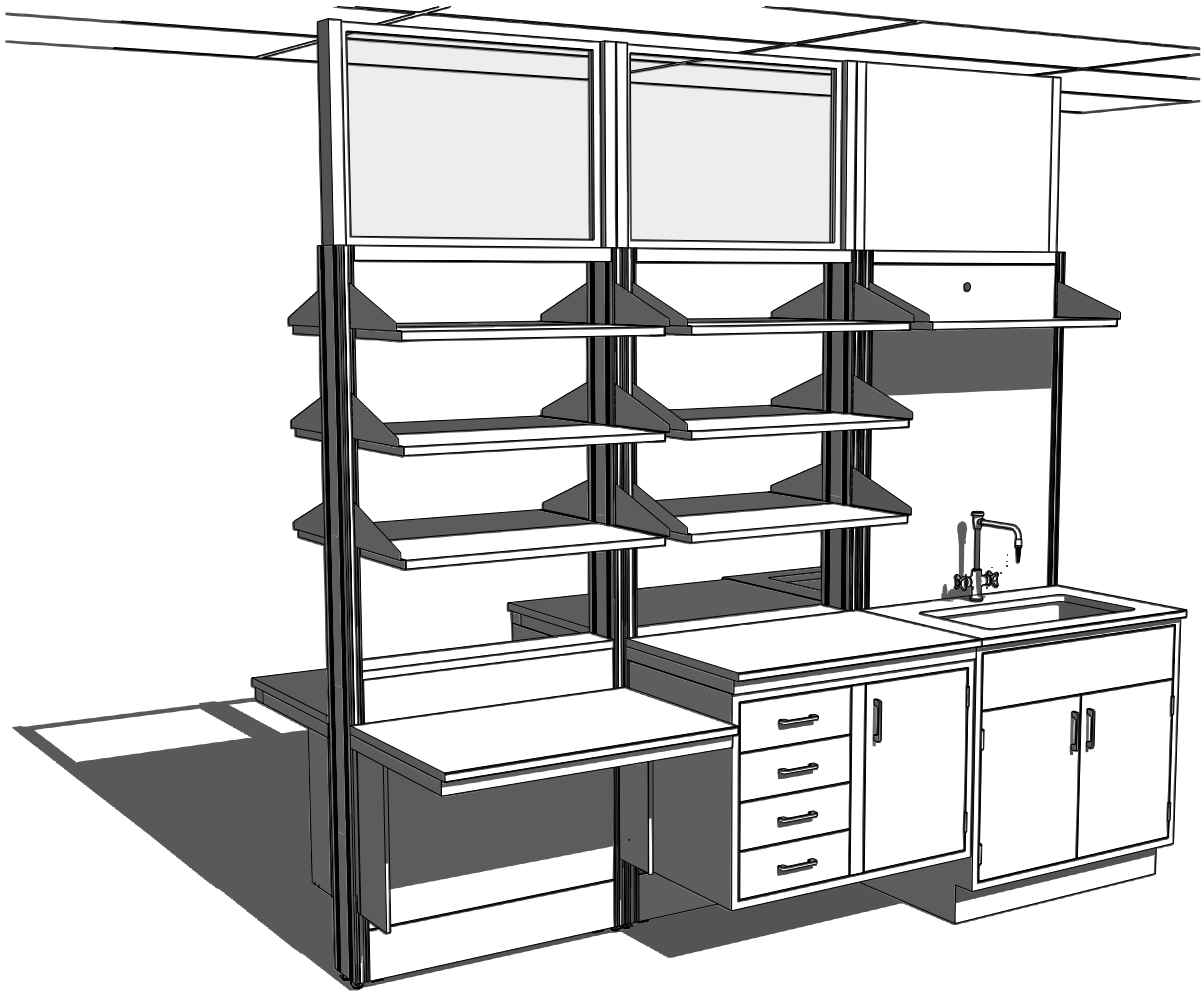

6" Partition Modules

Specifications:

6" Partition Modules are 37" high, with Upper Carriers, 84" high. Both are 6" deep and available in lengths shown.

Modules are available with or without Access Panels. Order without when used with floor mounted base cabinets.

Each module is furnished with hardware for attaching adjacent modules.

Ceiling Support and Module Ledge must be ordered separately.

6" Deep Partition Module – 37" High

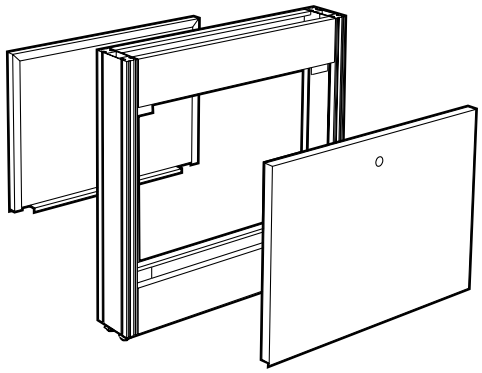

Length	with Access Panels	without Access Panels
24"	**F08M370624N**	**F08N370624N**
30"	**F08M370630N**	**F08N370630N**
36"	**F08M370636N**	**F08N370636N**
42"	**F08M370642N**	**F08N370642N**
48"	**F08M370648N ***	**F08N370648N**
54"	**F08M370654N ***	**F08N370654N**
60"	**F08M370660N ***	**F08N370660N**
66"	**F08M370666N ***	**F08N370666N**
72"	**F08M370672N ***	**F08N370672N**

* Modules 48" long and over are provided with two half-length Access Panels.

6" Deep Partition Module with Upper Carrier – 84" High

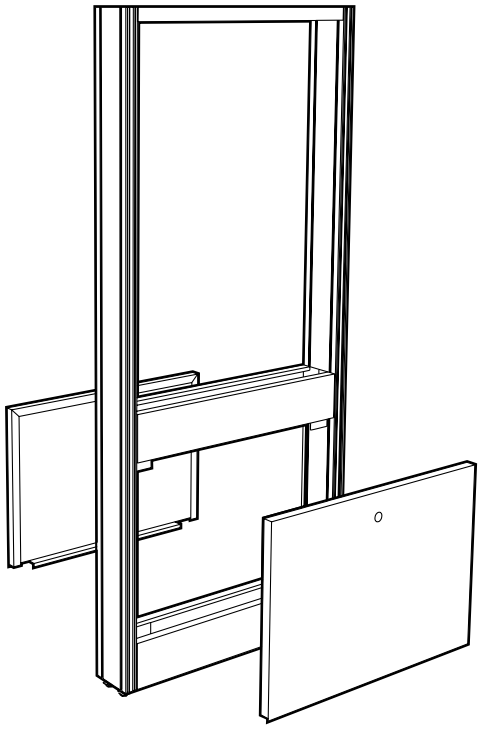

Length	with Access Panels	without Access Panels
24"	**F38M370624N**	**F38N370624N**
30"	**F38M370630N**	**F38N370630N**
36"	**F38M370636N**	**F38N370636N**
42"	**F38M370642N**	**F38N370642N**
48"	**F38M370648N ***	**F38N370648N**
54"	**F38M370654N ***	**F38N370654N**
60"	**F38M370660N ***	**F38N370660N**
66"	**F38M370666N ***	**F38N370666N**
72"	**F38M370672N ***	**F38N370672N**

* Modules 48" long and over are provided with two half-length Access Panels.

KEWAUNEE

6" Partition Modules

Specifications:

Service Riser Partition Modules are 47" high, with Upper Carrier, 84" high. Both are 6" deep and in lengths shown.

Modules are available with or without Access Panels. Order without when used with floor mounted base cabinets.

Each module is furnished with hardware for attaching adjacent modules.

Ceiling Support and Module Ledge must be ordered separately.

6" Deep Service Riser Partition Module – 47" High

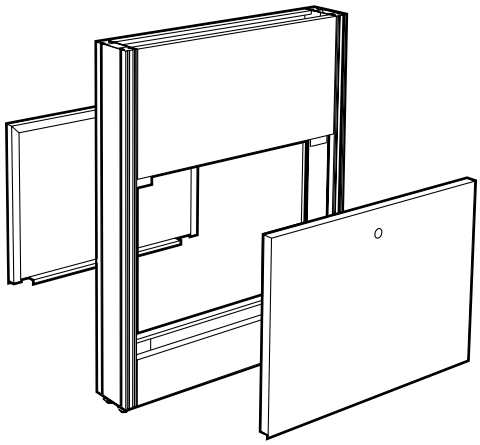

Length	with Access Panels	without Access Panels
24"	**F08M470624N**	**F08N470624N**
30"	**F08M470630N**	**F08N470630N**
36"	**F08M470636N**	**F08N470636N**
42"	**F08M470642N**	**F08N470642N**
48"	**F08M470648N ***	**F08N470648N**
54"	**F08M470654N ***	**F08N470654N**
60"	**F08M470660N ***	**F08N470660N**
66"	**F08M470666N ***	**F08N470666N**
72"	**F08M470672N ***	**F08N470672N**

* Modules 48" long and over are provided with two half-length Access Panels.

6" Deep Service Riser Partition Module with Upper Carrier – 84" High

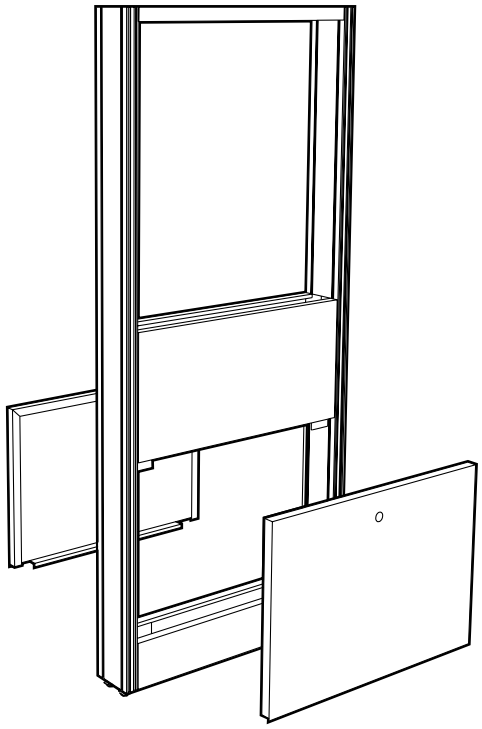

Length	with Access Panels	without Access Panels
24"	**F38M470624N**	**F38N470624N**
30"	**F38M470630N**	**F38N470630N**
36"	**F38M470636N**	**F38N470636N**
42"	**F38M470642N**	**F38N470642N**
48"	**F38M470648N ***	**F38N470648N**
54"	**F38M470654N ***	**F38N470654N**
60"	**F38M470660N ***	**F38N470660N**
66"	**F38M470666N ***	**F38N470666N**
72"	**F38M470672N ***	**F38N470672N**

* Modules 48" long and over are provided with two half-length Access Panels.

6" Partition Modules

Specifications:

Partition Modules are 37" high, with Upper Carriers, 84" high. Both are 6" deep and available in lengths shown.

Modules are available with or without Access Panels. Order without when used with floor mounted base cabinets.

24" and 30" long modules have two single-gang electric box cutouts, all other sizes have three.

Each module is furnished with hardware for attaching adjacent modules.

Ceiling Support and Module Ledge must be ordered separately.

6" Deep Standard Partition Module with Electric Cutouts – 37" High

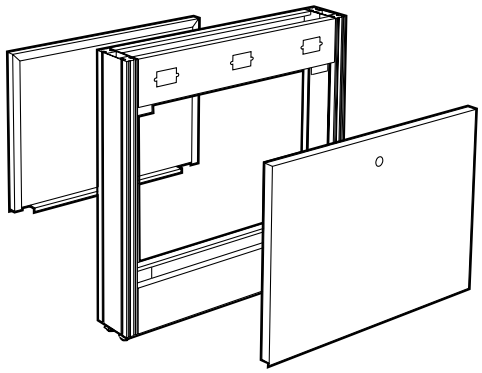

Length	with Access Panels	without Access Panels
24"	**F08M370624E**	**F08N370624E**
30"	**F08M370630E**	**F08N370630E**
36"	**F08M370636E**	**F08N370636E**
42"	**F08M370642E**	**F08N370642E**
48"	**F08M370648E** *	**F08N370648E**
54"	**F08M370654E** *	**F08N370654E**
60"	**F08M370660E** *	**F08N370660E**
66"	**F08M370666E** *	**F08N370666E**
72"	**F08M370672E** *	**F08N370672E**

* Modules 48" long and over are provided with two half-length Access Panels.

6" Deep Standard Partition Module with Electric Cutouts & Upper Carrier – 84" High

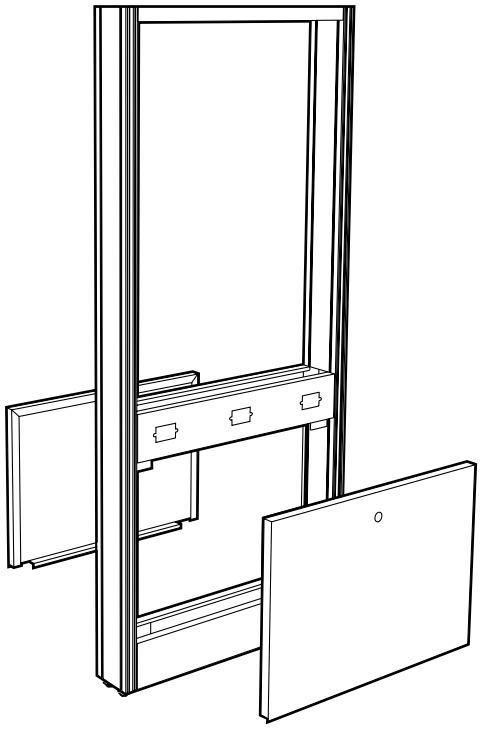

Length	with Access Panels	without Access Panels
24"	**F38M370624E**	**F38N370624E**
30"	**F38M370630E**	**F38N370630E**
36"	**F38M370636E**	**F38N370636E**
42"	**F38M370642E**	**F38N370642E**
48"	**F38M370648E** *	**F38N370648E**
54"	**F38M370654E** *	**F38N370654E**
60"	**F38M370660E** *	**F38N370660E**
66"	**F38M370666E** *	**F38N370666E**
72"	**F38M370672E** *	**F38N370672E**

* Modules 48" long and over are provided with two half-length Access Panels.

KEWAUNEE

6" Partition Modules

Specifications:

Service Riser Partition Modules are 47" high, with Upper Carrier, 84" high. Both are 12" deep and in lengths shown.

Modules are available with or without Access Panels. Order without when used with floor mounted base cabinets.

24" and 30" long modules have two single-gang electric box cutouts, all other sizes have three.

Each module is furnished with hardware for attaching adjacent modules.

Ceiling Support and Module Ledge must be ordered separately.

6" Deep Service Riser Partition Module with Electric Cutouts – 47" High

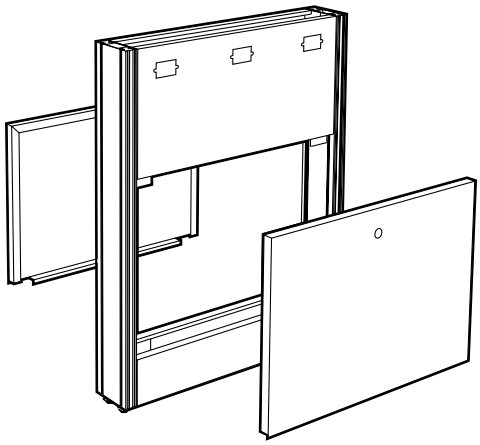

Length	with Access Panels	without Access Panels
24"	**F08M470624E**	**F08N470624E**
30"	**F08M470630E**	**F08N470630E**
36"	**F08M470636E**	**F08N470636E**
42"	**F08M470642E**	**F08N470642E**
48"	**F08M470648E** *	**F08N470648E**
54"	**F08M470654E** *	**F08N470654E**
60"	**F08M470660E** *	**F08N470660E**
66"	**F08M470666E** *	**F08N470666E**
72"	**F08M470672E** *	**F08N470672E**

* Modules 48" long and over are provided with two half-length Access Panels.

6" Deep Service Riser Partition Module with Electric Cutouts & Upper Carrier – 84" High

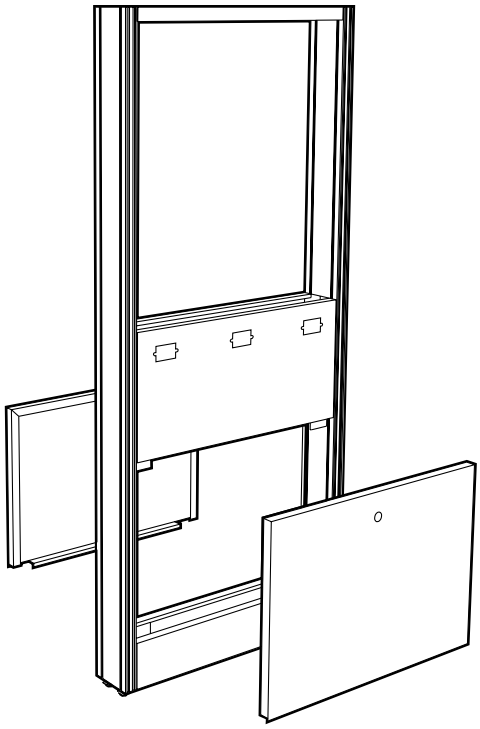

Length	with Access Panels	without Access Panels
24"	**F38M470624E**	**F38N470624E**
30"	**F38M470630E**	**F38N470630E**
36"	**F38M470636E**	**F38N470636E**
42"	**F38M470642E**	**F38N470642E**
48"	**F38M470648E** *	**F38N470648E**
54"	**F38M470654E** *	**F38N470654E**
60"	**F38M470660E** *	**F38N470660E**
66"	**F38M470666E** *	**F38N470666E**
72"	**F38M470672E** *	**F38N470672E**

* Modules 48" long and over are provided with two half-length Access Panels.

6" Partition Modules

Specifications:

Partition Modules with Paneled Upper Carrier are the same as standard Partition Modules; except, they are furnished with easy to remove panels to close off the area between the upper carrier uprights. They may be used as a service drop, to hide piping or tubing, or as a room divider.

When ordered with electric cutouts, 24" and 30" long modules have two single-gang electric box cutouts, all other sizes have three.

Each module furnished with hardware for attaching adjacent modules.

Ceiling Support must be ordered separately.
Module Ledge is not required.

6" Deep Standard Partition Module with Paneled Upper Carrier – 84" High

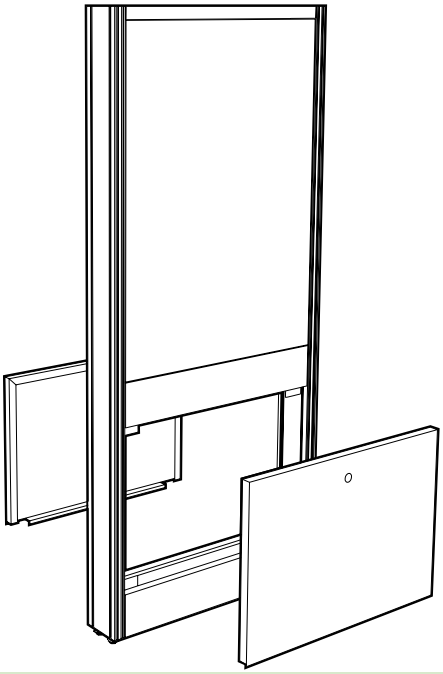

Length	with Lower Access Panels	without Lower Access Panels
24"	**F39M370624N**	**F39N370624N**
30"	**F39M370630N**	**F39N370630N**
36"	**F39M370636N**	**F39N370636N**
42"	**F39M370642N**	**F39N370642N**
48"	**F39M370648N** *	**F39N370648N** *
54"	**F39M370654N** *	**F39N370654N** *
60"	**F39M370660N** *	**F39N370660N** *
66"	**F39M370666N** *	**F39N370666N** *
72"	**F39M370672N** *	**F39N370672N** *

* Modules 48" long and over are provided with half-length removable panels.

6" Deep Standard Partition Module with Electric Cutouts & Paneled Upper Carrier – 84" High

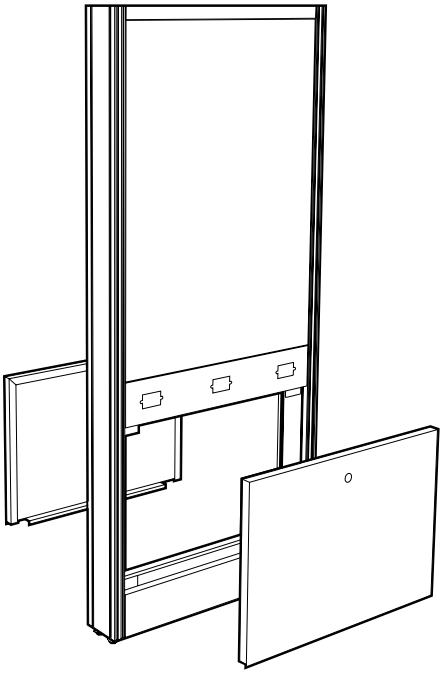

Length	with Lower Access Panels	without Lower Access Panels
24"	**F39M370624E**	**F39N370624E**
30"	**F39M370630E**	**F39N370630E**
36"	**F39M370636E**	**F39N370636E**
42"	**F39M370642E**	**F39N370642E**
48"	**F39M370648E** *	**F39N370648E** *
54"	**F39M370654E** *	**F39N370654E** *
60"	**F39M370660E** *	**F39N370660E** *
66"	**F39M370666E** *	**F39N370666E** *
72"	**F39M370672E** *	**F39N370672E** *

* Modules 48" long and over are provided with half-length removable panels.

KEWAUNEE

6" Partition Modules

Specifications:

Service Riser Partition Modules with Paneled Upper Carrier are the same as standard Service Riser Partition Modules; except, they are furnished with easy to remove panels to close off the area between the upper carrier uprights. They may be used as a service drop, to hide piping or tubing, or as a room divider.

When ordered with electric cutouts, 24" and 30" long modules have two single-gang electric box cutouts, all other sizes have three.

Each module furnished with hardware for attaching to adjacent modules.

Ceiling Support must be ordered separately.
Module Ledge is not required.

6" Deep Service Riser Partition Module with Paneled Upper Carrier – 84" High

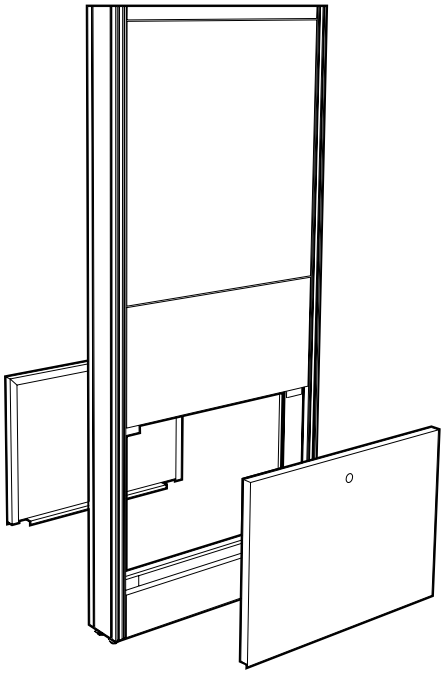

Length	with Lower Access Panels	without Lower Access Panels
24"	**F39M470624N**	**F39N470624N**
30"	**F39M470630N**	**F39N470630N**
36"	**F39M470636N**	**F39N470636N**
42"	**F39M470642N**	**F39N470642N**
48"	**F39M470648N** *	**F39N470648N** *
54"	**F39M470654N** *	**F39N470654N** *
60"	**F39M470660N** *	**F39N470660N** *
66"	**F39M470666N** *	**F39N470666N** *
72"	**F39M470672N** *	**F39N470672N** *

* Modules 48" long and over are provided with half-length removable panels.

6" Deep Service Riser Partition Module with Electric Cutouts & Paneled Upper Carrier – 84" High

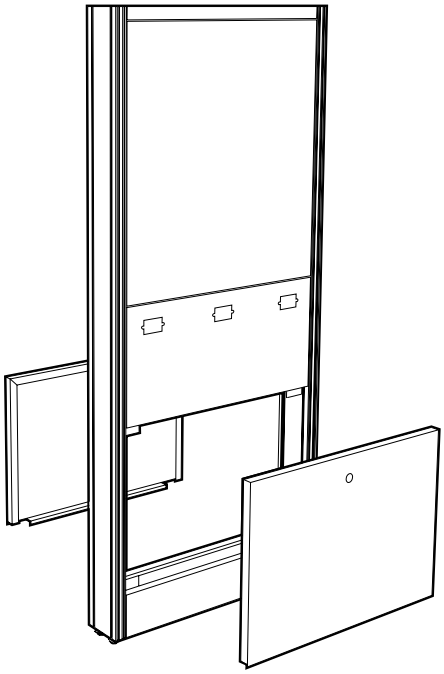

Length	with Lower Access Panels	without Lower Access Panels
24"	**F39M470624E**	**F39N470624E**
30"	**F39M470630E**	**F39N470630E**
36"	**F39M470636E**	**F39N470636E**
42"	**F39M470642E**	**F39N470642E**
48"	**F39M470648E**	**F39N470648E**
54"	**F39M470654E** *	**F39N470654E** *
60"	**F39M470660E** *	**F39N470660E** *
66"	**F39M470666E** *	**F39N470666E** *
72"	**F39M470672E** *	**F39N470672E** *

* Modules 48" long and over are provided with half-length removable panels.

6" Partition Modules

Specifications:

Partition Module Ceiling Supports consist of two cold rolled steel tube assemblies that telescope into the Partition Module Upper Carrier. They are designed to be fastened to channels (provided by others) attached to either the drop ceiling grid or to the roof supports.

Partition Module Ceiling Supports are required when the module is not adjacent to a fixed wall, or supported by a wing wall or fixed furniture.

Ceiling Partitions are available to finish off the space between the Ceiling Supports above the Partition Module to form a continuous floor-to-ceiling divider. They are available in a number of heights and in either glass or with a solid steel panel. Solid partitions may be finished to match the Partition Module or in a contrasting color.

6" Deep Partition Module Ceiling Support

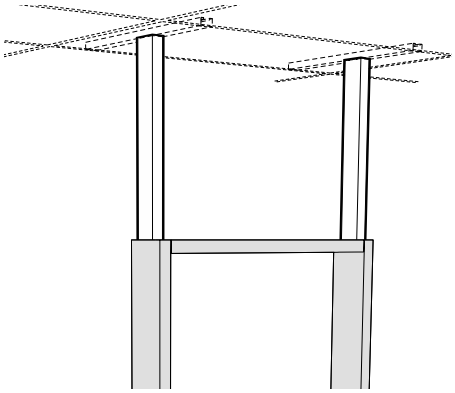

Size	24" High	36" High	48" High	60" High
03"x01"	**F48S240301N**	**F48S360301N**	**F48S480301N**	**F48S600301N**

6" Deep Partition Module Glass Ceiling Partition

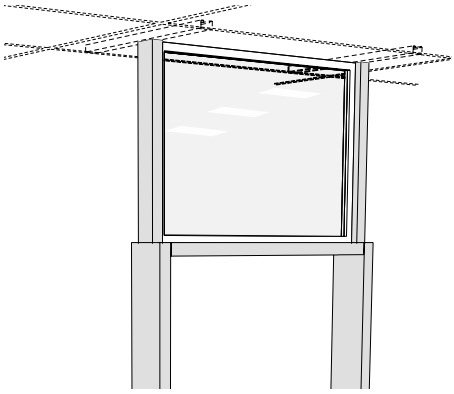

Length	12" High	18" High	24" High	30" High
24"	**F49G120624N**	**F49G180624N**	**F49G240624N**	**F49G300624N**
30"	**F49G120630N**	**F49G180630N**	**F49G240630N**	**F49G300630N**
36"	**F49G120636N**	**F49G180636N**	**F49G240636N**	**F49G300636N**
42"	**F49G120642N**	**F49G180642N**	**F49G240642N**	**F49G300642N**
48"	**F49G120648N**	**F49G180648N**	**F49G240648N**	**F49G300648N**
54"	**F49G120654N**	**F49G180654N**	**F49G240654N**	**F49G300654N**
60"	**F49G120660N**	**F49G180660N**	**F49G240660N**	**F49G300660N**
66"	**F49G120666N**	**F49G180666N**	**F49G240666N**	**F49G300666N**
72"	**F49G120672N**	**F49G180672N**	**F49G240672N**	**F49G300672N**

6" Deep Partition Module Solid Ceiling Partition

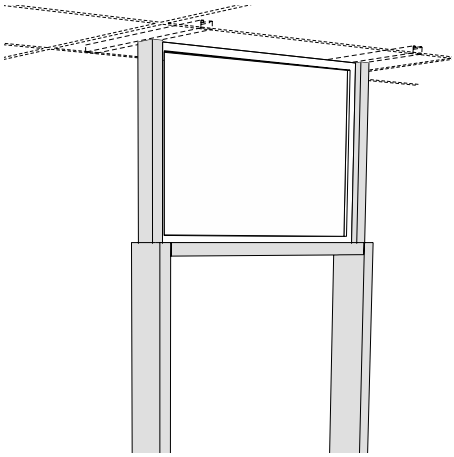

Length	12" High	18" High	24" High	30" High
24"	**F49M120624N**	**F49M180624N**	**F49M240624N**	**F49M300624N**
30"	**F49M120630N**	**F49M180630N**	**F49M240630N**	**F49M300630N**
36"	**F49M120636N**	**F49M180636N**	**F49M240636N**	**F49M300636N**
42"	**F49M120642N**	**F49M180642N**	**F49M240642N**	**F49M300642N**
48"	**F49M120648N**	**F49M180648N**	**F49M240648N**	**F49M300648N**
54"	**F49M120654N**	**F49M180654N**	**F49M240654N**	**F49M300654N**
60"	**F49M120660N**	**F49M180660N**	**F49M240660N**	**F49M300660N**
66"	**F49M120666N**	**F49M180666N**	**F49M240666N**	**F49M300666N**
72"	**F49M120672N**	**F49M180672N**	**F49M240672N**	**F49M300672N**

6" Corner Column Modules

Specifications:

Corner Column Modules allow multiple configurations of Partition Modules to form a variety of assemblies. The Column Modules are available in three heights to match the Partition Modules. Each module is furnished with removable access panels for two sides and attachment hardware.

Module Ledge, when required must be ordered separately.

6" Deep Partition Module Corner Column

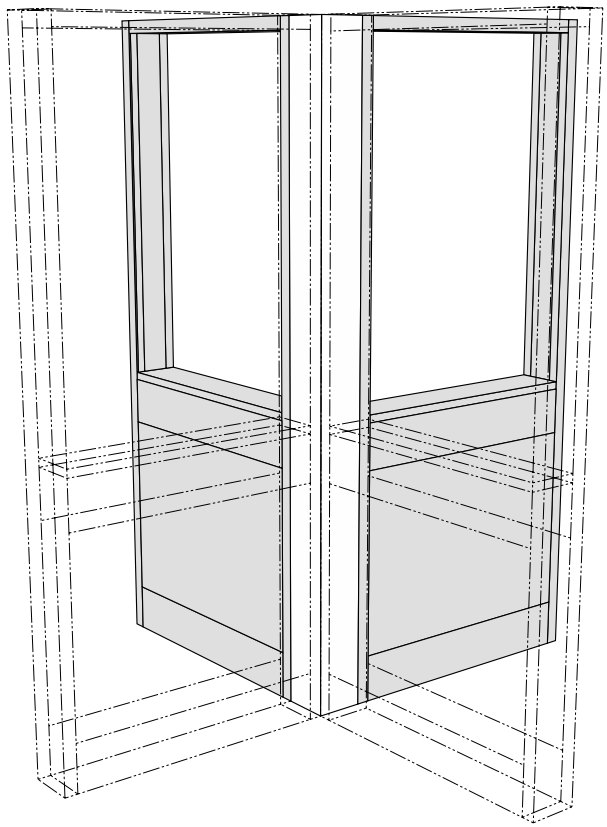

Height	Part Number
37"	**F40M370606N**
47"	**F40M470606N**
84"	**F40M840606N**

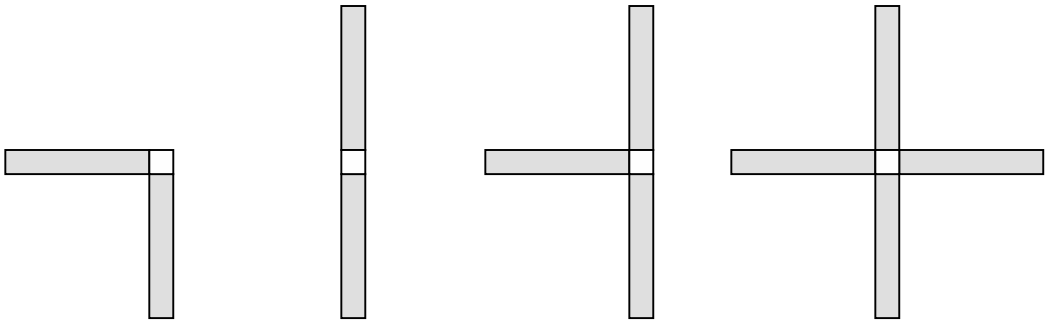

Possible Alpha System Assembly configurations using 6" Corner Column Modules

6" Partition Module End Filler

Specifications:

Partition Module End Fillers are designed to close off the end of Partition Modules to offer a more finished appearance. A single filler is used to finish Standard Partition Modules. Two fillers are used to finish Partition Modules with Paneled Upper Carriers.

Partition Module End Fillers are provided with all required installation hardware.

6" Deep Partition Module End Fillers

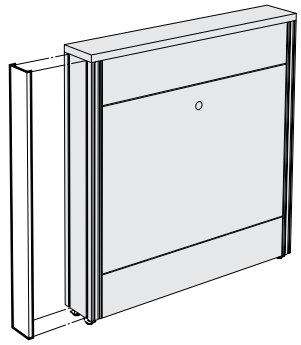

Height	Lower Filler
35"	**F00M360106N**
45"	**F00M460106N**

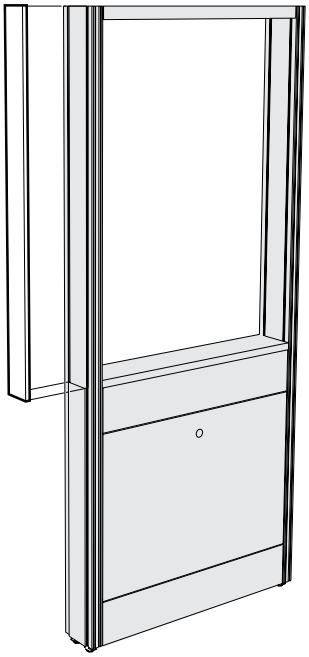

Height	Upper Filler
38"	**F00M380106N**
48"	**F00M480106N**

KEWAUNEE

12" Island Structural Modules

Features:

- 12" Island Structural Modules provide support for a wide combination of accessories, including:
  - adjustable Worksurface frames
  - adjustable tables
  - hanging cabinets - upper and lower
  - floor mounted cabinets
  - adjustable shelving
  - lighting
  - electrical and plumbing raceway
  - service drops
  - tack boards and marker boards
  - pegboards
- 12" Island Structural Modules provide 6" of service space and are built to receive standard pipe hangers for ease of installing service piping and electrical conduit.
- System design allows shelving to be suspended both above and below the Worksurface.
- Easy and positive structural alignment and attachment to adjacent modules.
- Available with easy to remove access panels. May be ordered without access panels for use with floor mounted base cabinets.

SEFA 10 | Class 5 – Configuration 2 – Category 2

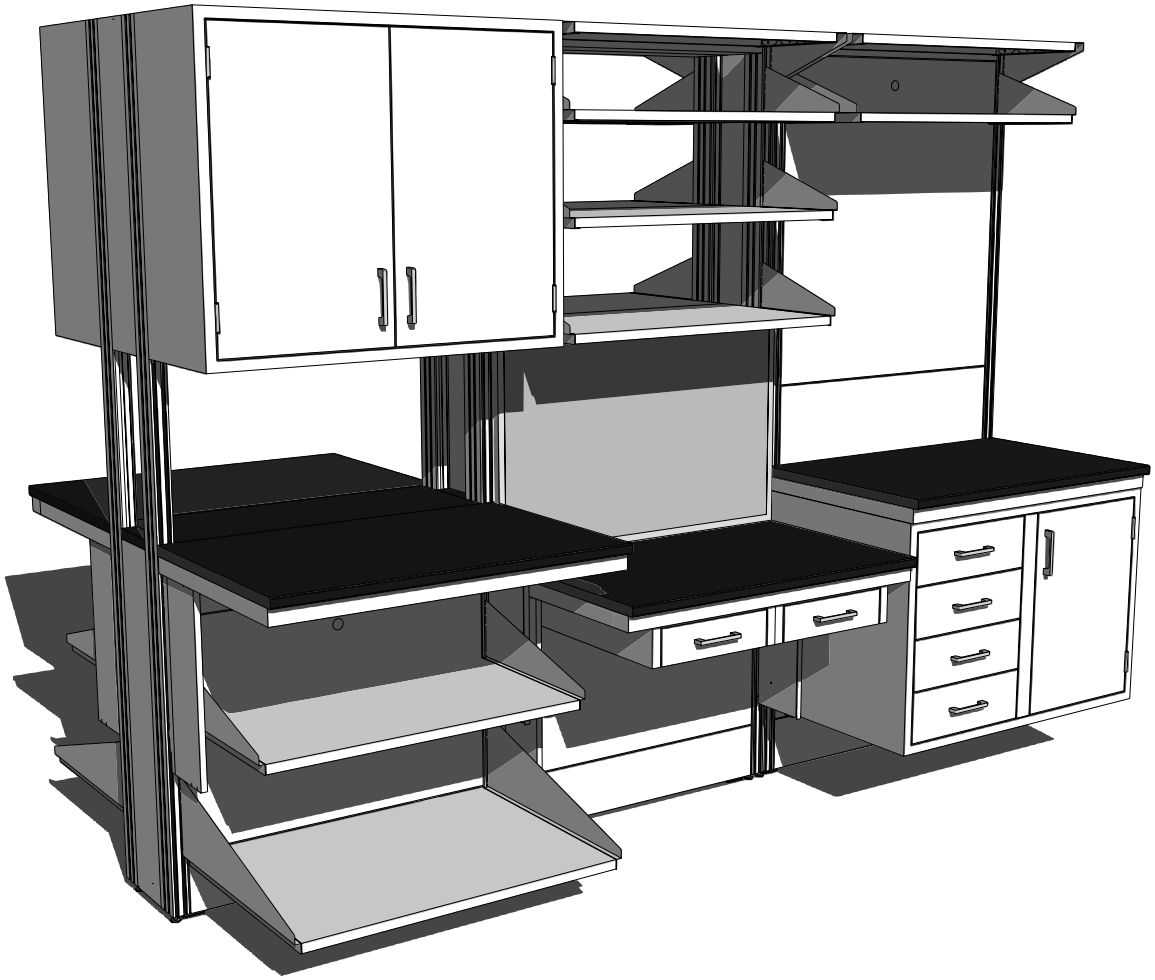

12" Island Structural Modules

Specifications:

Island Modules are 37" high, with Upper Carriers, 84" high. Both are 12" deep and available in lengths shown.

Modules are available with or without Access Panels. Order without when used with floor mounted base cabinets.

Each module is furnished with hardware for attaching adjacent modules.

Module Ledge must be ordered separately.

12" Deep Island Module – 37" High

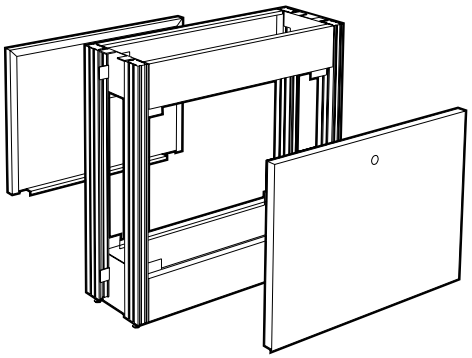

Length	with Access Panels	without Access Panels
24"	**F06M371224N**	**F06N371224N**
30"	**F06M371230N**	**F06N371230N**
36"	**F06M371236N**	**F06N371236N**
42"	**F06M371242N**	**F06N371242N**
48"	**F06M371248N ***	**F06N371248N**
54"	**F06M371254N ***	**F06N371254N**
60"	**F06M371260N ***	**F06N371260N**
66"	**F06M371266N ***	**F06N371266N**
72"	**F06M371272N ***	**F06N371272N**

* Modules 48" long and over are provided with two half-length Access Panels.

12" Deep Island Module with Upper Carrier – 84" High

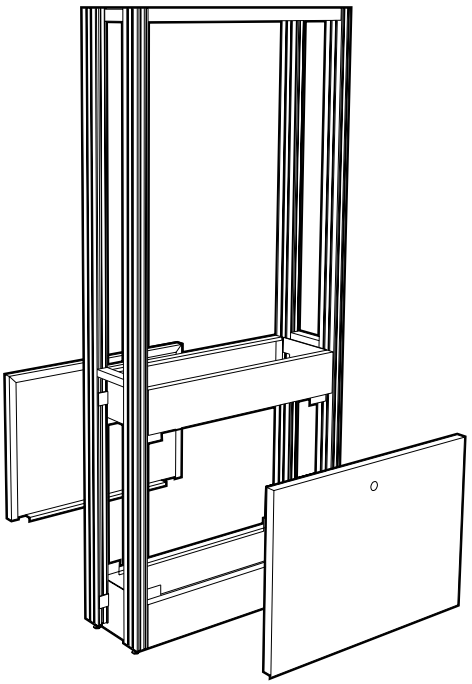

Length	with Access Panels	without Access Panels
24"	**F36M371224N**	**F36N371224N**
30"	**F36M371230N**	**F36N371230N**
36"	**F36M371236N**	**F36N371236N**
42"	**F36M371242N**	**F36N371242N**
48"	**F36M371248N ***	**F36N371248N**
54"	**F36M371254N ***	**F36N371254N**
60"	**F36M371260N ***	**F36N371260N**
66"	**F36M371266N ***	**F36N371266N**
72"	**F36M371272N ***	**F36N371272N**

* Modules 48" long and over are provided with two half-length Access Panels.

KEWAUNEE

12" Island Structural Modules

Specifications:

Service Riser Island Modules are 47" high, with Upper Carrier, 84" high. Both are 12" deep and in lengths shown.

Modules are available with or without Access Panels. Order without when used with floor mounted base cabinets.

Each module is furnished with hardware for attaching adjacent modules.

Module Ledge must be ordered separately.

12" Deep Service Riser Island Module – 47" High

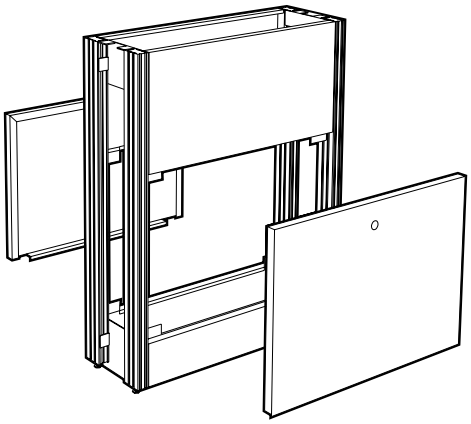

Length	with Access Panels	without Access Panels
24"	**F06M471224N**	**F06N471224N**
30"	**F06M471230N**	**F06N471230N**
36"	**F06M471236N**	**F06N471236N**
42"	**F06M471242N**	**F06N471242N**
48"	**F06M471248N ***	**F06N471248N**
54"	**F06M471254N ***	**F06N471254N**
60"	**F06M471260N ***	**F06N471260N**
66"	**F06M471266N ***	**F06N471266N**
72"	**F06M471272N ***	**F06N471272N**

* Modules 48" long and over are provided with two half-length Access Panels.

12" Deep Service Riser Island Module with Upper Carrier – 84" High

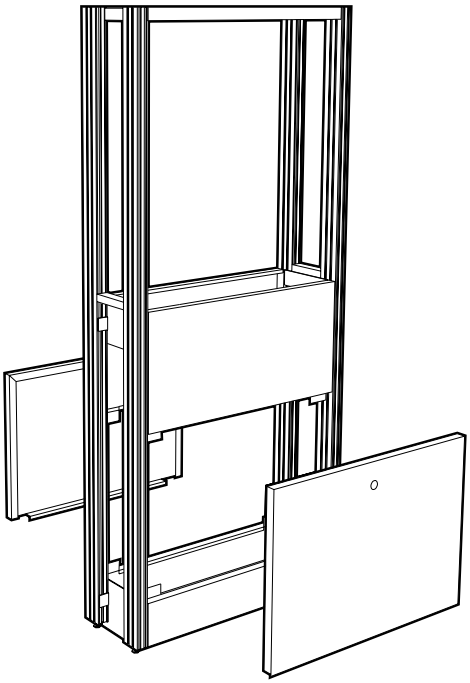

Length	with Access Panels	without Access Panels
24"	**F36M471224N**	**F36N471224N**
30"	**F36M471230N**	**F36N471230N**
36"	**F36M471236N**	**F36N471236N**
42"	**F36M471242N**	**F36N471242N**
48"	**F36M471248N ***	**F36N471248N**
54"	**F36M471254N ***	**F36N471254N**
60"	**F36M471260N ***	**F36N471260N**
66"	**F36M471266N ***	**F36N471266N**
72"	**F36M471272N ***	**F36N471272N**

* Modules 48" long and over are provided with two half-length Access Panels.

12" Island Structural Modules

Specifications:

Island Modules are 37" high, with Upper Carriers, 84" high. Both are 12" deep and available in lengths shown.

Modules are available with or without Access Panels. Order without when used with floor mounted base cabinets.

24" and 30" long modules have two single-gang electric box cutouts, all other sizes have three.

Each module is furnished with hardware for attaching adjacent modules.

Module Ledge must be ordered separately.

12" Deep Standard Island Module with Electric Cutouts – 37" High

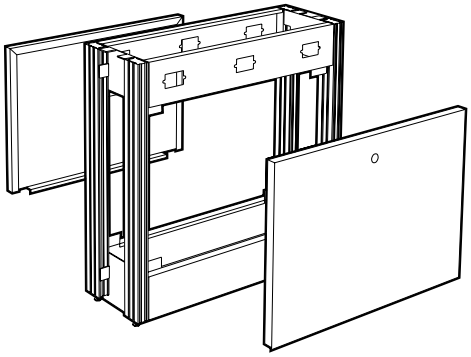

Length	with Access Panels	without Access Panels
24"	**F06M371224E**	**F06N371224E**
30"	**F06M371230E**	**F06N371230E**
36"	**F06M371236E**	**F06N371236E**
42"	**F06M371242E**	**F06N371242E**
48"	**F06M371248E ***	**F06N371248E**
54"	**F06M371254E ***	**F06N371254E**
60"	**F06M371260E ***	**F06N371260E**
66"	**F06M371266E ***	**F06N371266E**
72"	**F06M371272E ***	**F06N371272E**

* Modules 48" long and over are provided with two half-length Access Panels.

12" Deep Standard Island Module with Electric Cutouts & Upper Carrier – 84" High

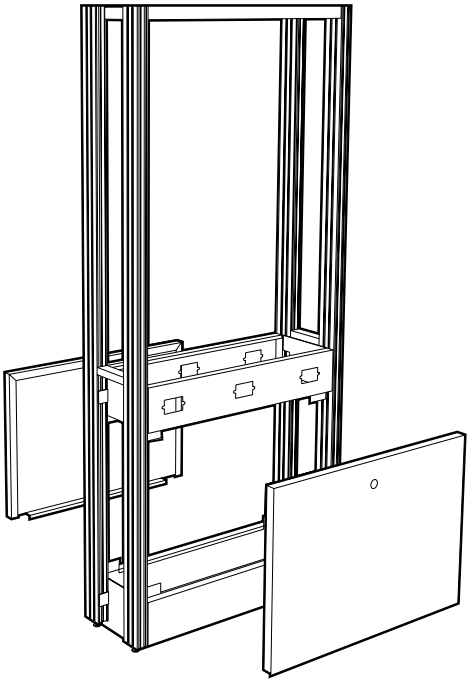

Length	with Access Panels	without Access Panels
24"	**F36M371224E**	**F36N371224E**
30"	**F36M371230E**	**F36N371230E**
36"	**F36M371236E**	**F36N371236E**
42"	**F36M371242E**	**F36N371242E**
48"	**F36M371248E ***	**F36N371248E**
54"	**F36M371254E ***	**F36N371254E**
60"	**F36M371260E ***	**F36N371260E**
66"	**F36M371266E ***	**F36N371266E**
72"	**F36M371272E ***	**F36N371272E**

* Modules 48" long and over are provided with two half-length Access Panels.

KEWAUNEE

12" Island Structural Modules

Specifications:

Service Riser Island Modules are 47" high, with Upper Carrier, 84" high. Both are 12" deep and in lengths shown.

Modules are available with or without Access Panels. Order without when used with floor mounted base cabinets.

24" and 30" long modules have two single-gang electric box cutouts, all other sizes have three.

Each module is furnished with hardware for attaching adjacent modules.

Module Ledge must be ordered separately.

12" Deep Service Riser Island Module with Electric Cutouts – 47" High

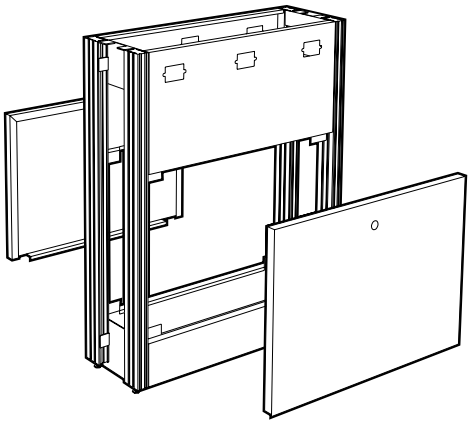

Length	with Access Panels	without Access Panels
24"	**F06M471224E**	**F06N471224E**
30"	**F06M471230E**	**F06N471230E**
36"	**F06M471236E**	**F06N471236E**
42"	**F06M471242E**	**F06N471242E**
48"	**F06M471248E ***	**F06N471248E**
54"	**F06M471254E ***	**F06N471254E**
60"	**F06M471260E ***	**F06N471260E**
66"	**F06M471266E ***	**F06N471266E**
72"	**F06M471272E ***	**F06N471272E**

* Modules 48" long and over are provided with two half-length Access Panels.

12" Deep Service Riser Island Module with Electric Cutouts & Upper Carrier – 84" High

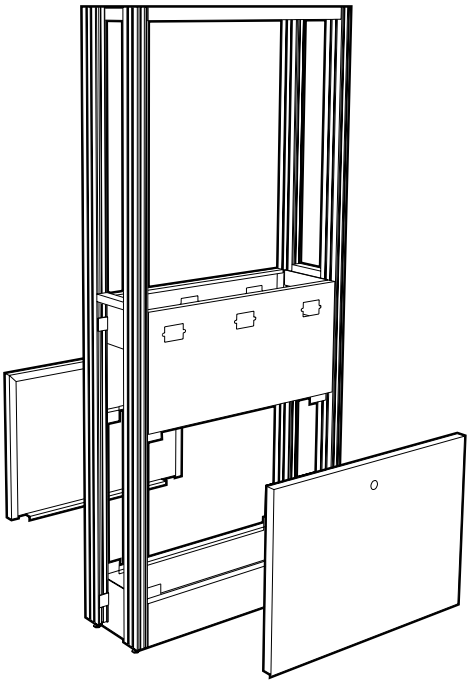

Length	with Access Panels	without Access Panels
24"	**F36M471224E**	**F36N471224E**
30"	**F36M471230E**	**F36N471230E**
36"	**F36M471236E**	**F36N471236E**
42"	**F36M471242E**	**F36N471242E**
48"	**F36M471248E ***	**F36N471248E**
54"	**F36M471254E ***	**F36N471254E**
60"	**F36M471260E ***	**F36N471260E**
66"	**F36M471266E ***	**F36N471266E**
72"	**F36M471272E ***	**F36N471272E**

* Modules 48" long and over are provided with two half-length Access Panels.

12" Island Structural Modules

Specifications:

Island Modules with Paneled Upper Carrier are the same as standard Island Modules; except, they are furnished with easy to remove panels to close off the area between the upper carrier uprights. They may be used as a service drop, to hide piping or tubing, or as a room divider.

When ordered with electric cutouts, 24" and 30" long modules have two single-gang electric box cutouts, all other sizes have three.

Each module furnished with hardware for attaching adjacent modules.

Module Ledge is not required.

12" Deep Standard Island Module with Paneled Upper Carrier – 84" High

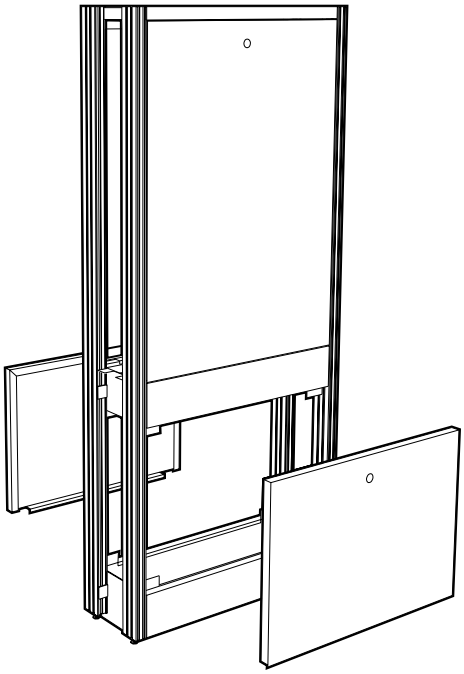

Length	with Lower Access Panels	without Lower Access Panels
24"	**F37M371224N**	**F37N371224N**
30"	**F37M371230N**	**F37N371230N**
36"	**F37M371236N**	**F37N371236N**
42"	**F37M371242N**	**F37N371242N**
48"	**F37M371248N** *	**F37N371248N** *
54"	**F37M371254N** *	**F37N371254N** *
60"	**F37M371260N** *	**F37N371260N** *
66"	**F37M371266N** *	**F37N371266N** *
72"	**F37M371272N** *	**F37N371272N** *

* Modules 48" long and over are provided with half-length removable panels.

12" Deep Standard Island Module with Electric Cutouts & Paneled Upper Carrier – 84" High

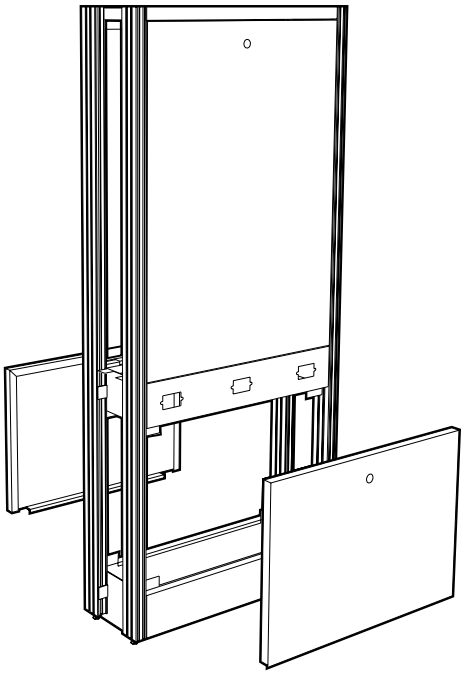

Length	with Lower Access Panels	without Lower Access Panels
24"	**F37M371224E**	**F37N371224E**
30"	**F37M371230E**	**F37N371230E**
36"	**F37M371236E**	**F37N371236E**
42"	**F37M371242E**	**F37N371242E**
48"	**F37M371248E** *	**F37N371248E** *
54"	**F37M371254E** *	**F37N371254E** *
60"	**F37M371260E** *	**F37N371260E** *
66"	**F37M371266E** *	**F37N371266E** *
72"	**F37M371272E** *	**F37N371272E** *

* Modules 48" long and over are provided with half-length removable panels.

12" Island Structural Modules

Specifications:

Service Riser Island Modules with Paneled Upper Carrier are the same as standard Service Riser Island Modules; except, they are furnished with easy to remove panels to close off the area between the upper carrier uprights. They may be used as a service drop, to hide piping or tubing, or as a room divider.

When ordered with electric cutouts, 24" and 30" long modules have two single-gang electric box cutouts, all other sizes have three.

Each module furnished with hardware for attaching to adjacent modules.

Module Ledge is not required.

12" Deep Service Riser Island Module with Paneled Upper Carrier – 84" High

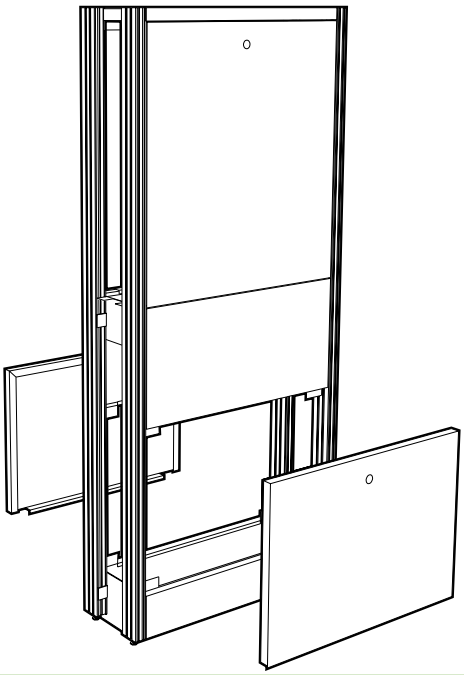

Length	with Lower Access Panels	without Lower Access Panels
24"	**F37M471224N**	**F37N471224N**
30"	**F37M471230N**	**F37N471230N**
36"	**F37M471236N**	**F37N471236N**
42"	**F37M471242N**	**F37N471242N**
48"	**F37M471248N** *	**F37N471248N** *
54"	**F37M471254N** *	**F37N471254N** *
60"	**F37M471260N** *	**F37N471260N** *
66"	**F37M471266N** *	**F37N471266N** *
72"	**F37M471272N** *	**F37N471272N** *

* Modules 48" long and over are provided with half-length removable panels.

12" Deep Service Riser Island Module with Electric Cutouts & Paneled Upper Carrier – 84" High

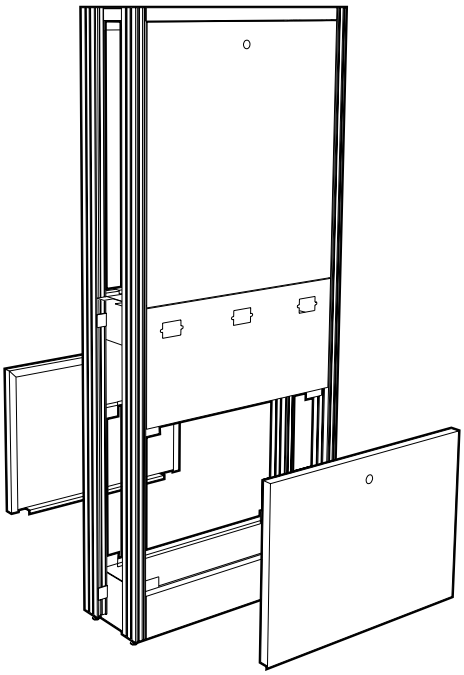

Length	with Lower Access Panels	without Lower Access Panels
24"	**F37M471224E**	**F37N471224E**
30"	**F37M471230E**	**F37N471230E**
36"	**F37M471236E**	**F37N471236E**
42"	**F37M471242E**	**F37N471242E**
48"	**F37M471248E**	**F37N471248E**
54"	**F37M471254E** *	**F37N471254E** *
60"	**F37M471260E** *	**F37N471260E** *
66"	**F37M471266E** *	**F37N471266E** *
72"	**F37M471272E** *	**F37N471272E** *

* Modules 48" long and over are provided with half-length removable panels.

Service Tunnels & Wire Raceways

Horizontal Service Tunnel

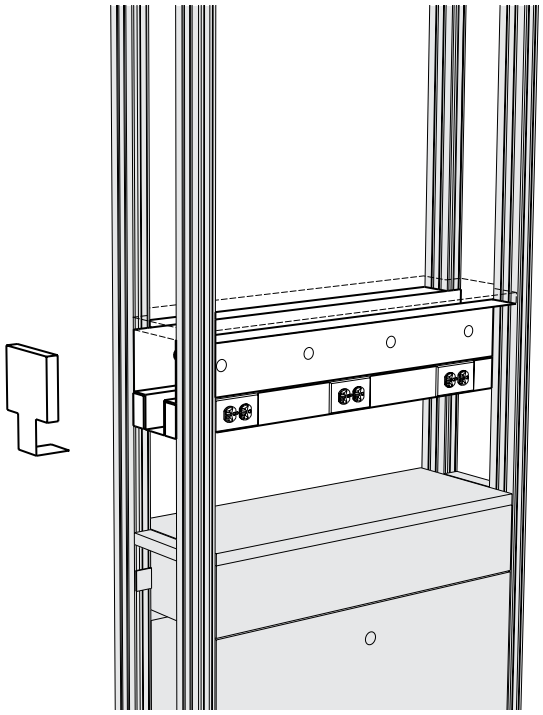

Length	Part Number	Duplex Outlets
24"	**F44M120824N**	4
30"	**F44M120830N**	4
36"	**F44M120836N**	6
42"	**F44M120842N**	6
48"	**F44M120848N**	6
54"	**F44M120854N**	6
60"	**F44M120860N**	6
66"	**F44M120866N**	6
72"	**F44M120872N**	6
End Cap	**F44M080603N**	

The Horizontal Service Tunnel combines a 6" deep by 8" high steel enclosure with two G-3000 wire raceways to form a horizontal tunnel that can handle most laboratory service needs. The enclosure allows service fittings to be mounted on either side or on the bottom while providing a 6" x 5" area to run piping. The wire raceways are provided with either two or three 120 volt AC duplex receptacles on each side. The top is designed to be closed with a Module Core Shelf or by adding Service Tunnel Enclosure Panels.

Horizontal Service Tunnels are for use with 12" Island Module Upper Carriers only.

Module Core Shelf for use with Service Tunnels, Manifolds, and Wire Raceways

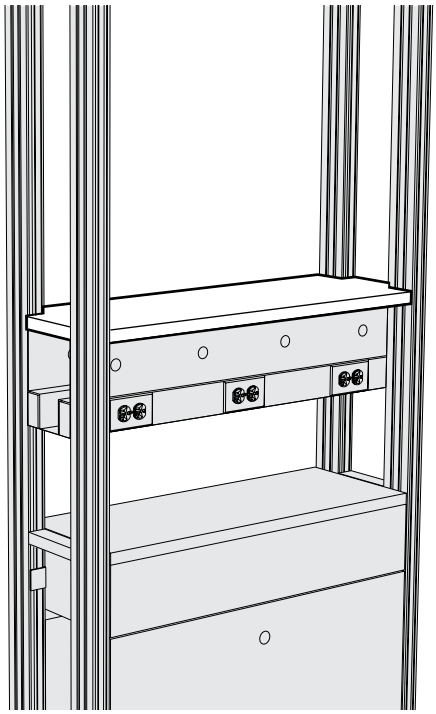

Length	Part Number
24"	**F69M120124N**
30"	**F69M120130N**
36"	**F69M120136N**
42"	**F69M120142N**
48"	**F69M120148N**
54"	**F69M120154N**
60"	**F69M120160N**
66"	**F69M120166N**
72"	**F69M120172N**

The Module Core Shelf may be used to close the top of a Horizontal Service Tunnel or be mounted on top of 18" high Vertical Wire Raceways or Vertical Service Manifolds. They are formed of 16 gauge cold rolled steel and are available in all module lengths.

Vertical Service Distribution

Vertical Wire Raceway

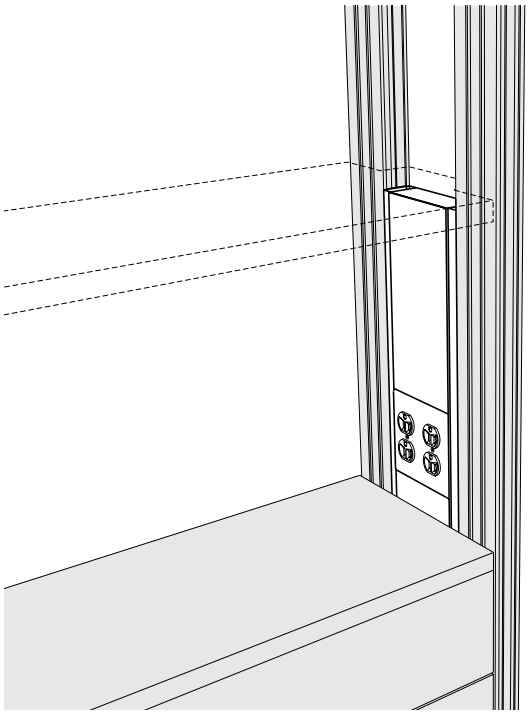

Height	Part Number	Duplex Outlets
18"	**F43M180212N**	2
38"	**F43M380212N**	4
48"	**F43M480212N**	4

The Vertical Wire Raceway uses a G-4000 wire raceway to form an assembly that snaps into place between the uprights of Island Upper Carriers. The raceway is furnished with 120 volt AC duplex receptacles and is designed to connect to power from below.

Vertical Wire Raceways are available in three heights, 18" for use below a Module Core Shelf (as shown), 48" to run full height on a standard Upper Carrier and 38" for use with a Service Riser Upper Carrier.

The raceway may be divided to form two separate compartments to allow running power and communications cabling in the same assembly.

Vertical Wire Raceways are for use with 12" Island Module Upper Carriers only.

Vertical Service Manifold

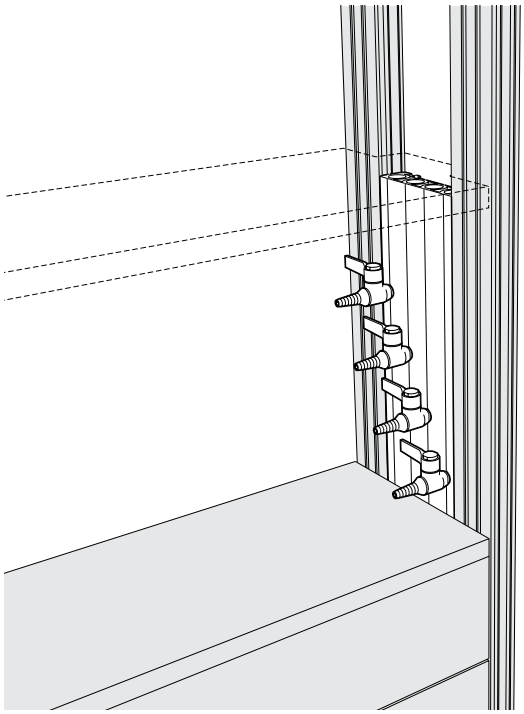

Height	Part Number	Service Outlets
18"	**F77M060218F**	4
18"	**F77M060218N**	0 - No Outlets

The Vertical Service Manifold is a one piece extruded aluminum assembly, designed to carry up to four separate services, that slides into place between the uprights of 12" Island Upper Carriers. It is furnished complete with four Laboratory Ball Valves. Services may be piped from either above or below. (Specify services required)

Vertical Service Manifolds are available in other lengths and configurations. Contact your Kewaunee sales representative for further information.

The Vertical Service Manifold is designed for use with 12" Island Module Upper Carriers only.

Enclosure Panels

Upper Carrier Service Tunnel Enclosure Panels

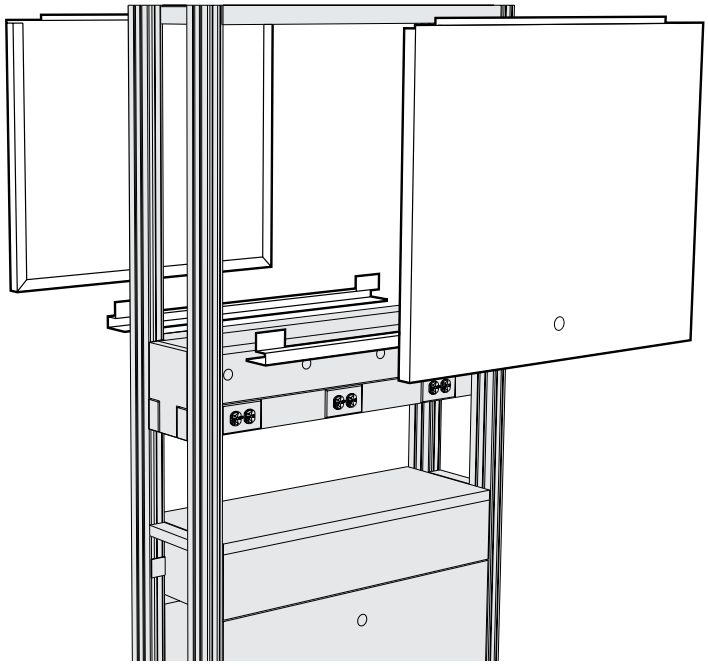

Length	Part Number
24"	**F78M300224N**
30"	**F78M300230N**
36"	**F78M300236N**
42"	**F78M300242N**
48"	**F78M300248N**
54"	**F78M300254N**
60"	**F78M300260N**
66"	**F78M300266N**
72"	**F78M300272N**

Service Tunnel Panels enclose sides of the Upper Carrier above a Horizontal Service Tunnel to hide piping and wiring. Panels are fabricated of cold rolled steel. All necessary hardware is included.

Upper Carrier Enclosure Panels

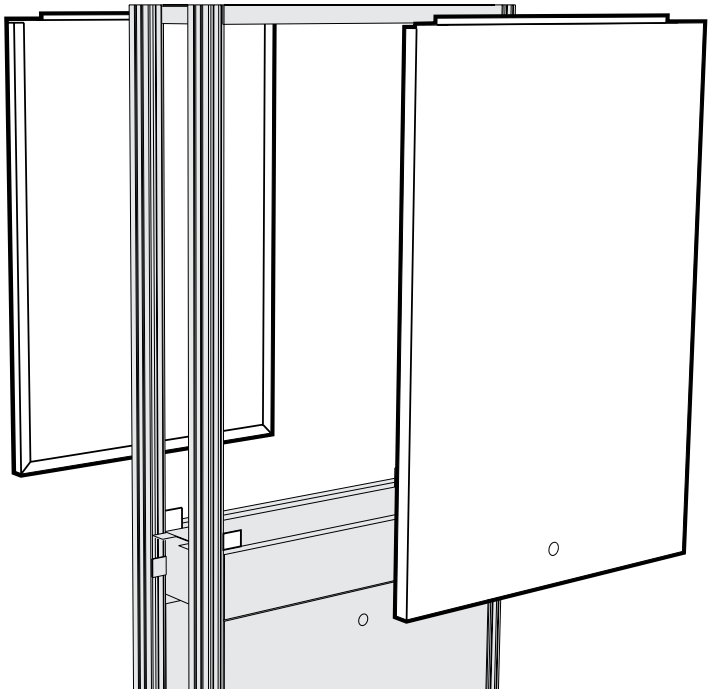

Length	Standard	Service Riser
24"	**F78M480224N**	**F78M380224N**
30"	**F78M480230N**	**F78M380230N**
36"	**F78M480236N**	**F78M380236N**
42"	**F78M480242N**	**F78M380242N**
48"	**F78M480248N**	**F78M380248N**
54"	**F78M480254N**	**F78M380254N**
60"	**F78M480260N**	**F78M380260N**
66"	**F78M480266N**	**F78M380266N**
72"	**F78M480272N**	**F78M380272N**

Upper Carrier Enclosure Panels may be used to convert an open Upper Carrier to Paneled Upper Carrier. Panels are fabricated of cold rolled steel. All necessary hardware is included.

KEWAUNEE

Service Drop

Service Drop Enclosure

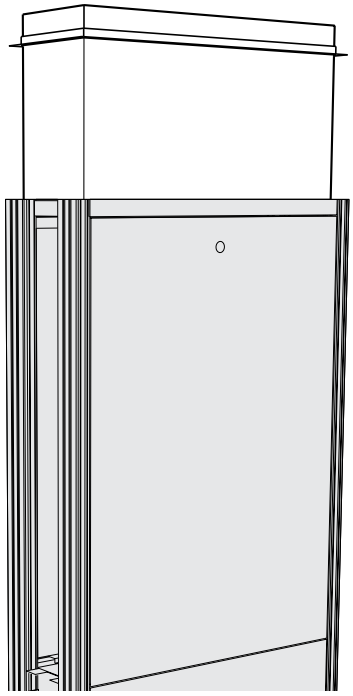

Height	Length	12" Island	6" Island	9" Wall Module
24"	24"	**F45M240724N**	**F75M240224N**	**F46M240524N**
24"	30"	**F45M240730N**	**F75M240230N**	**F46M240530N**
24"	36"	**F45M240736N**	**F75M240236N**	**F46M240536N**
24"	42"	**F45M240742N**	**F75M240242N**	**F46M240542N**
24"	48"	**F45M240748N**	**F75M240248N**	**F46M240548N**
36"	24"	**F45M360724N**	**F75M360224N**	**F46M360524N**
36"	30"	**F45M360730N**	**F75M360230N**	**F46M360530N**
36"	36"	**F45M360736N**	**F75M360236N**	**F46M360536N**
36"	42"	**F45M360742N**	**F75M360242N**	**F46M360542N**
36"	48"	**F45M360748N**	**F75M360248N**	**F46M360548N**
48"	24"	**F45M480724N**	**F75M480224N**	**F46M480524N**
48"	30"	**F45M480730N**	**F75M480230N**	**F46M480530N**
48"	36"	**F45M480736N**	**F75M480236N**	**F46M480536N**
48"	42"	**F45M480742N**	**F75M480242N**	**F46M480542N**
48"	48"	**F45M480748N**	**F75M480248N**	**F46M480548N**

Designed to fit inside the top frame on the Module Upper Carrier and hide piping, conduit and wiring routed from the ceiling. Fabricated of cold rolled steel panels. Furnished complete with angles for ceiling attachment.

Note: Field modification of Module Top Frame is required to accommodate service piping.

12" Island Structural Module Fillers

Specifications:

Island Module End Fillers are designed to close off the end of Island Modules to offer a more finished appearance. They are available in a variety of sizes that may be combined to cover the entire end of the assembly or just a portion.

Island Module End Fillers are provided with all required installation hardware.

12" Deep Island Module End Fillers

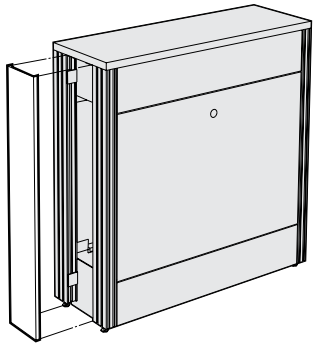

Height	Lower Filler
35"	**F00M360112N**
45"	**F00M460112N**

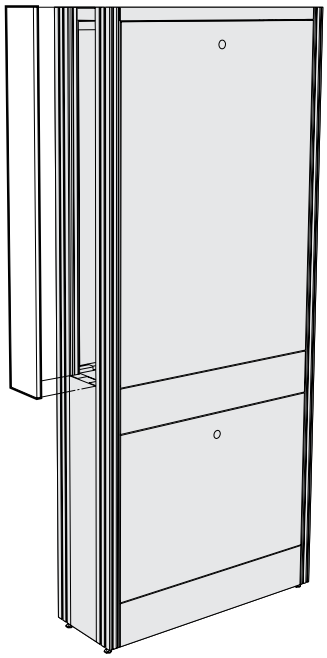

Height	Upper Filler
24"	**F00M240112N**
30"	**F00M300112N**
38"	**F00M380112N**
48"	**F00M480112N**

3" Wall Structural Modules

Features:

- 3" Wall Structural Modules provide support for a broad combination of accessories, including:
  - adjustable Worksurface frames
  - adjustable tables
  - hanging cabinets - upper and lower
  - floor mounted cabinets
  - adjustable shelving
  - lighting
  - electrical raceway
  - electrical drops
  - tackboards and markerboards
  - pegboards
- 3" Wall Structural Modules provide support where no plumbing services are required.
- System design allows shelving to be suspended both above and below the Worksurface.
- Easy and positive structural alignment and attachment to adjacent modules.
- Available with easy to remove access panels. May be ordered without access panels for use with floor mounted base cabinets.
- Provided with floor mounting bracket and anchors.

SEFA 10 | Class 5 – Configuration 1 – Category 2

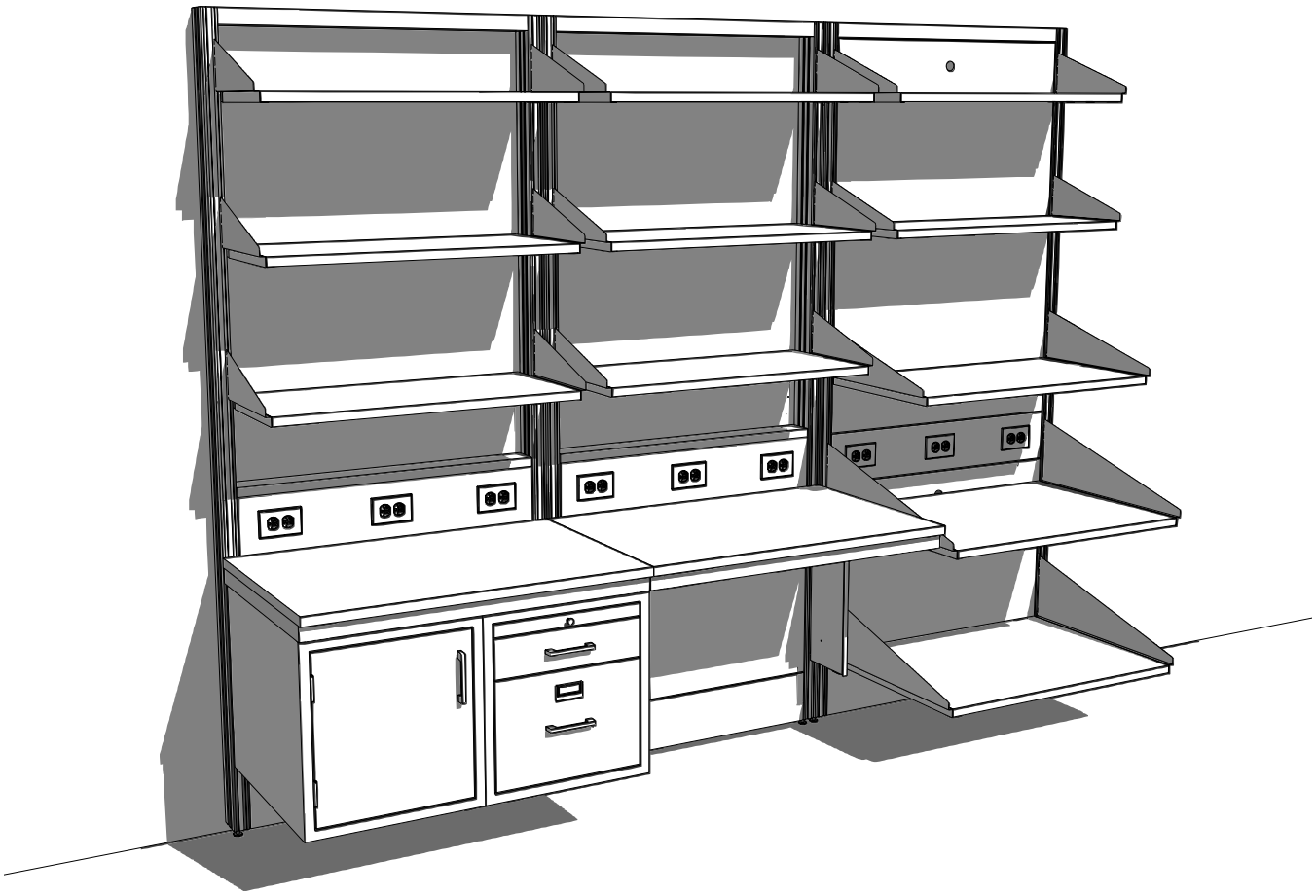

3" Wall Structural Modules

Specifications:

3" Wall Modules are 37" high, with Upper Carrier, 84" high. Both are 3" deep and available in lengths shown.

Modules are available with or without Access Panels. Order without when used with floor mounted base cabinets.

Each module is furnished with hardware for attaching adjacent modules. Wall anchors are not included.

Module Ledge must be ordered separately.

3" Deep Standard Wall Module – 37" High

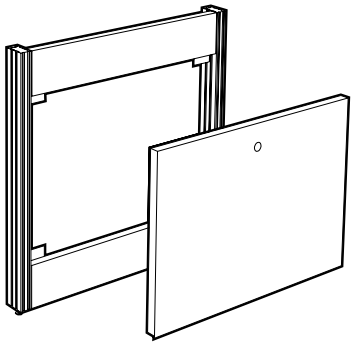

Length	with Access Panel	without Access Panel
24"	**F02M370324N**	**F02N370324N**
30"	**F02M370330N**	**F02N370330N**
36"	**F02M370336N**	**F02N370336N**
42"	**F02M370342N**	**F02N370342N**
48"	**F02M370348N** *	**F02N370348N**
54"	**F02M370354N** *	**F02N370354N**
60"	**F02M370360N** *	**F02N370360N**
66"	**F02M370366N** *	**F02N370366N**
72"	**F02M370372N** *	**F02N370372N**

* Modules 48" long and over are provided with two half-length Access Panels.

3" Deep Standard Wall Module with Upper Carrier – 84" High

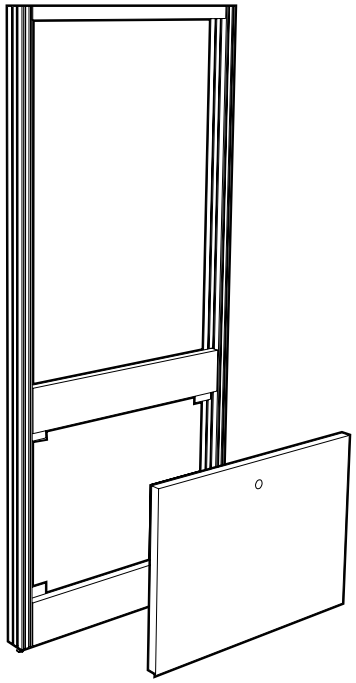

Length	with Access Panel	without Access Panel
24"	**F32M370324N**	**F32N370324N**
30"	**F32M370330N**	**F32N370330N**
36"	**F32M370336N**	**F32N370336N**
42"	**F32M370342N**	**F32N370342N**
48"	**F32M370348N** *	**F32N370348N**
54"	**F32M370354N** *	**F32N370354N**
60"	**F32M370360N** *	**F32N370360N**
66"	**F32M370366N** *	**F32N370366N**
72"	**F32M370372N** *	**F32N370372N**

* Modules 48" long and over are provided with two half-length Access Panels.

KEWAUNEE

3" Wall Structural Modules

Specifications:

Service Riser Wall Modules are 47" high, with Upper Carrier, 84" high. Both are 3" deep and in lengths shown.

Modules are available with or without Access Panels. Order without when used with floor mounted base cabinets.

Each module furnished with hardware for attaching adjacent modules. Wall anchors are not included.

Module Ledge must be ordered separately.

3" Deep Service Riser Wall Module – 47" High

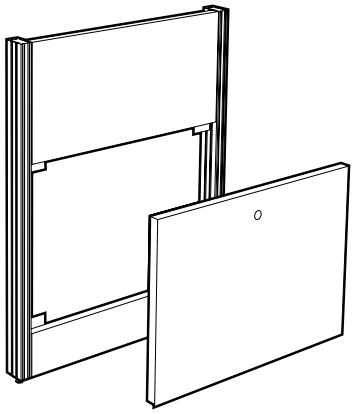

Length	with Access Panel	without Access Panel
24"	**F02M470324N**	**F02N470324N**
30"	**F02M470330N**	**F02N470330N**
36"	**F02M470336N**	**F02N470336N**
42"	**F02M470342N**	**F02N470342N**
48"	**F02M470348N** *	**F02N470348N**
54"	**F02M470354N** *	**F02N470354N**
60"	**F02M470360N** *	**F02N470360N**
66"	**F02M470366N** *	**F02N470366N**
72"	**F02M470372N** *	**F02N470372N**

* Modules 48" long and over are provided with two half-length Access Panels.

3" Deep Service Riser Wall Module with Upper Carrier – 84" High

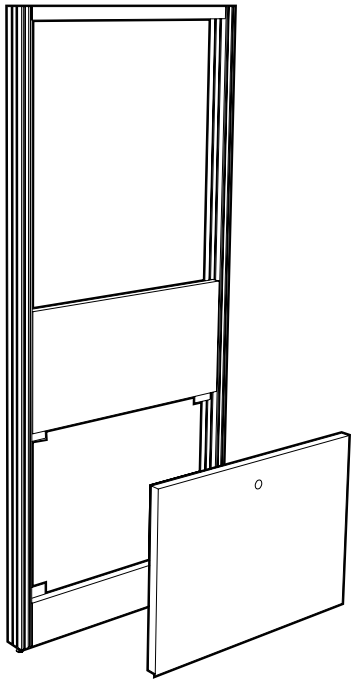

Length	with Access Panel	without Access Panel
24"	**F32M470324N**	**F32N470324N**
30"	**F32M470330N**	**F32N470330N**
36"	**F32M470336N**	**F32N470336N**
42"	**F32M470342N**	**F32N470342N**
48"	**F32M470348N** *	**F32N470348N**
54"	**F32M470354N** *	**F32N470354N**
60"	**F32M470360N** *	**F32N470360N**
66"	**F32M470366N** *	**F32N470366N**
72"	**F32M470372N** *	**F32N470372N**

* Modules 48" long and over are provided with two half-length Access Panels.

3" Wall Structural Modules

Specifications:

3" Wall Modules are 37" high, with Upper Carrier, 84" high. Both are 3" deep and available in lengths shown.

Modules are available with or without Access Panels. Order without when used with floor mounted base cabinets.

24" and 30" long modules have two single-gang electric box cutouts, all other sizes have three.

Each module is furnished with hardware for attaching adjacent modules. Wall anchors are not included.

Module Ledge must be ordered separately.

3" Deep Standard Wall Module with Electric Cutouts – 37" High

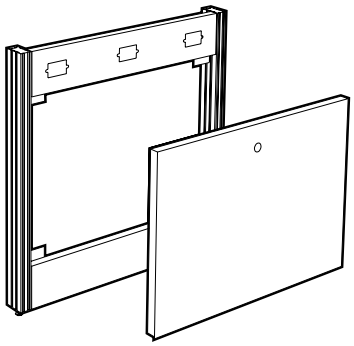

Length	with Access Panel	without Access Panel
24"	**F02M370324E**	**F02N370324E**
30"	**F02M370330E**	**F02N370330E**
36"	**F02M370336E**	**F02N370336E**
42"	**F02M370342E**	**F02N370342E**
48"	**F02M370348E** *	**F02N370348E**
54"	**F02M370354E** *	**F02N370354E**
60"	**F02M370360E** *	**F02N370360E**
66"	**F02M370366E** *	**F02N370366E**
72"	**F02M370372E** *	**F02N370372E**

* Modules 48" long and over are provided with two half-length Access Panels.

3" Deep Standard Wall Module with Electric Cutout & Upper Carrier – 84" High

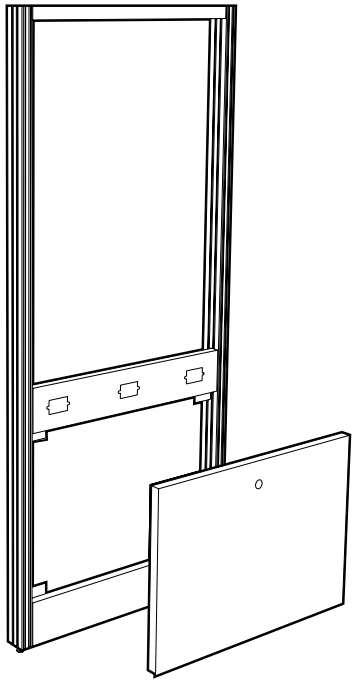

Length	with Access Panel	without Access Panel
24"	**F32M370324E**	**F32N370324E**
30"	**F32M370330E**	**F32N370330E**
36"	**F32M370336E**	**F32N370336E**
42"	**F32M370342E**	**F32N370342E**
48"	**F32M370348E** *	**F32N370348E**
54"	**F32M370354E** *	**F32N370354E**
60"	**F32M370360E** *	**F32N370360E**
66"	**F32M370366E** *	**F32N370366E**
72"	**F32M370372E** *	**F32N370372E**

* Modules 48" long and over are provided with two half-length Access Panels.

KEWAUNEE

3" Wall Structural Modules

Specifications:

Service Riser Wall Modules are 47" high, with Upper Carrier, 84" high. Both are 3" deep and in lengths shown.

Modules are available with or without Access Panels. Order without when used with floor mounted base cabinets.

24" and 30" long modules have two single-gang electric box cutouts, all other sizes have three.

Each module furnished with hardware for attaching adjacent modules. Wall anchors are not included.

Module Ledge must be ordered separately.

3" Deep Service Riser Wall Module with Electric Cutouts – 47" High

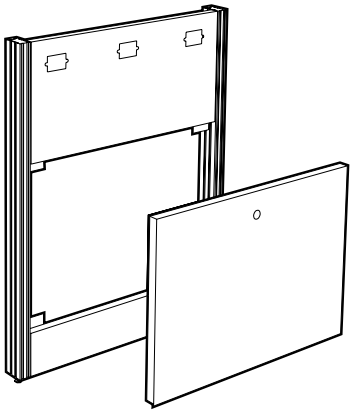

Length	with Access Panel	without Access Panel
24"	**F02M470324E**	**F02N470324E**
30"	**F02M470330E**	**F02N470330E**
36"	**F02M470336E**	**F02N470336E**
42"	**F02M470342E**	**F02N470342E**
48"	**F02M470348E** *	**F02N470348E**
54"	**F02M470354E** *	**F02N470354E**
60"	**F02M470360E** *	**F02N470360E**
66"	**F02M470366E** *	**F02N470366E**
72"	**F02M470372E** *	**F02N470372E**

* Modules 48" long and over are provided with two half-length Access Panels.

3" Deep Service Riser Wall Module with Electric Cutouts & Upper Carrier – 84" High

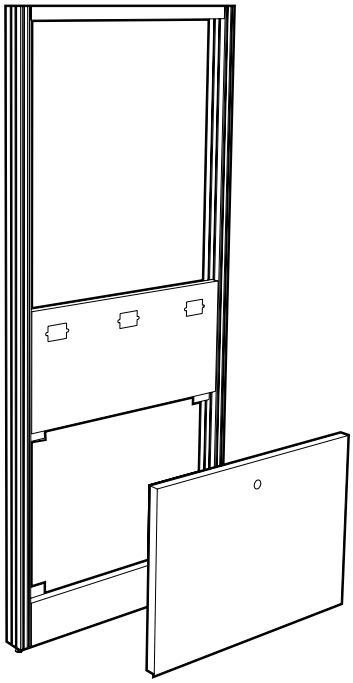

Length	with Access Panel	without Access Panel
24"	**F32M470324E**	**F32N470324E**
30"	**F32M470330E**	**F32N470330E**
36"	**F32M470336E**	**F32N470336E**
42"	**F32M470342E**	**F32N470342E**
48"	**F32M470348E** *	**F32N470348E**
54"	**F32M470354E** *	**F32N470354E**
60"	**F32M470360E** *	**F32N470360E**
66"	**F32M470366E** *	**F32N470366E**
72"	**F32M470372E** *	**F32N470372E**

* Modules 48" long and over are provided with two half-length Access Panels.

3" Wall Structural Modules

Specifications:

3" Wall Modules with Paneled Upper Carrier are the same as standard 3" Wall Modules; except, they are furnished with an easy to remove panel to close off the area between the Upper Carrier uprights.

When ordered with electric cutouts, 24" and 30" long modules have two single-gang electric box cutouts, all other sizes have three.

Each module furnished with hardware for attaching adjacent modules. Wall anchors are not included.

Module Ledge is not required.

3" Deep Standard Wall Module with Paneled Upper Carrier – 84" High

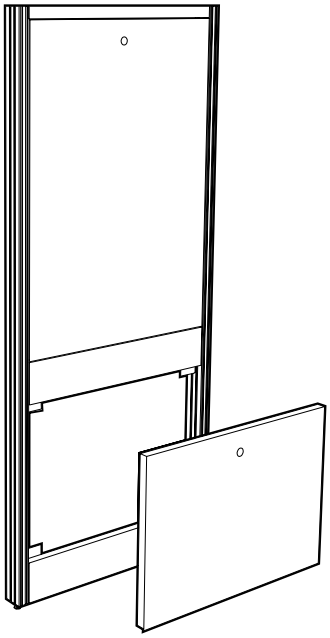

Length	with Lower Access Panel	without Lower Access Panel
24"	**F33M370324N**	**F33N370324N**
30"	**F33M370330N**	**F33N370330N**
36"	**F33M370336N**	**F33N370336N**
42"	**F33M370342N**	**F33N370342N**
48"	**F33M370348N** *	**F33N370348N** *
54"	**F33M370354N** *	**F33N370354N** *
60"	**F33M370360N** *	**F33N370360N** *
66"	**F33M370366N** *	**F33N370366N** *
72"	**F33M370372N** *	**F33N370372N** *

* Modules 48" long and over are provided with half-length removable panels.

3" Deep Standard Wall Module with Electric Cutouts & Paneled Upper Carrier – 84" High

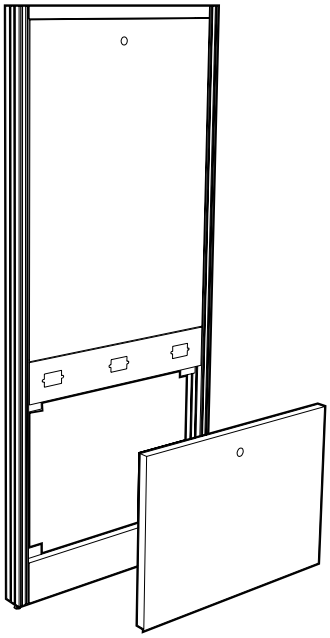

Length	with Lower Access Panel	without Lower Access Panel
24"	**F33M370324E**	**F33N370324E**
30"	**F33M370330E**	**F33N370330E**
36"	**F33M370336E**	**F33N370336E**
42"	**F33M370342E**	**F33N370342E**
48"	**F33M370348E** *	**F33N370348E** *
54"	**F33M370354E** *	**F33N370354E** *
60"	**F33M370360E** *	**F33N370360E** *
66"	**F33M370366E** *	**F33N370366E** *
72"	**F33M370372E** *	**F33N370372E** *

* Modules 48" long and over are provided with half-length removable panels.

3" Wall Structural Modules

Specifications:

Service Riser Wall Modules with Paneled Upper Carrier are the same as standard Service Riser Wall Modules; except, they are furnished with an easy to remove panel to close off the area between the Upper Carrier uprights.

When ordered with electric cutouts, 24" and 30" long modules have two single-gang electric box cutouts, all other sizes have three.

Each module furnished with hardware for attaching adjacent modules. Wall anchors are not included.

Module Ledge is not required.

3" Deep Service Riser Wall Module with Paneled Upper Carrier – 84" High

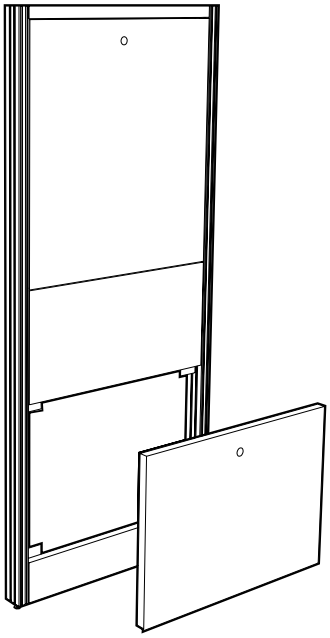

Length	with Lower Access Panel	without Lower Access Panel
24"	**F33M470324N**	**F33N470324N**
30"	**F33M470330N**	**F33N470330N**
36"	**F33M470336N**	**F33N470336N**
42"	**F33M470342N**	**F33N470342N**
48"	**F33M470348N** *	**F33N470348N** *
54"	**F33M470354N** *	**F33N470354N** *
60"	**F33M470360N** *	**F33N470360N** *
66"	**F33M470366N** *	**F33N470366N** *
72"	**F33M470372N** *	**F33N470372N** *

* Modules 48" long and over are provided with half-length removable panels.

3" Deep Service Riser Wall Module with Electric Cutouts & Paneled Upper Carrier – 84" High

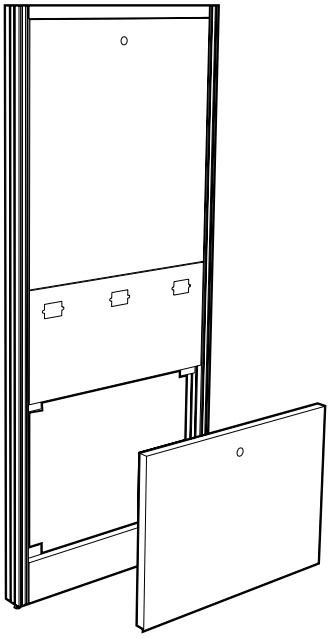

Length	with Lower Access Panel	without Lower Access Panel
24"	**F33M470324E**	**F33N470324E**
30"	**F33M470330E**	**F33N470330E**
36"	**F33M470336E**	**F33N470336E**
42"	**F33M470342E**	**F33N470342E**
48"	**F33M470348E** *	**F33N470348E** *
54"	**F33M470354E** *	**F33N470354E** *
60"	**F33M470360E** *	**F33N470360E** *
66"	**F33M470366E** *	**F33N470366E** *
72"	**F33M470372E** *	**F33N470372E** *

* Modules 48" long and over are provided with half-length removable panels.

Fixed Cabinetry Attachment

Specifications:

The Fixed Furniture Attachment Kit allows Wall or Island Structural Modules to be solidly fastened to Floor Mounted Base Cabinets. This assembly provides support for the Structural Module and Upper Carrier when it is impractical or undesirable to anchor the Structural Module to the wall or floor.

The kit includes bracing, a pair of steel filler panels, and attachment hardware.

Kit for Attaching Fixed Furniture to Structural Modules

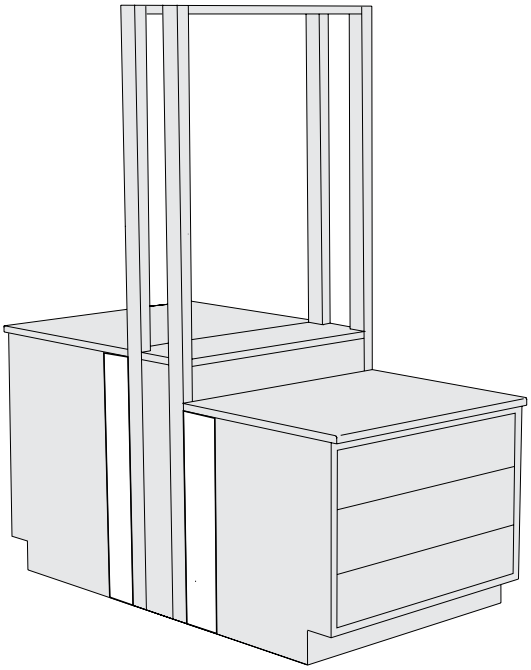

Kit for 30" Deep Worksurface Tops

Height	Part Number
31"	**F09M310207N**
37"	**F09M370207N**

Kit for 24" Deep Worksurface Tops

Height	Part Number
31"	**F09M310201N**
37"	**F09M370201N**

KEWAUNEE

9" Wall Structural Modules

Features:

- 9" Wall Structural Modules provide support for a wide combination of accessories, including:
  - adjustable Worksurface frames
  - adjustable tables
  - hanging cabinets - upper and lower
  - floor mounted cabinets
  - adjustable shelving
  - lighting
  - electrical and plumbing raceway
  - service drops
  - tackboards and markerboards
  - pegboards
- 9" Wall Structural Modules provide 6" of service space and are built to receive standard pipe hangers for ease of installing service piping and electrical conduit.
- System design allows shelving to be suspended both above and below the Worksurface.
- Easy and positive structural alignment and attachment to adjacent modules.
- Available with easy to remove access panels. May be ordered without access panels for use with floor mounted base cabinets.

SEFA 10 | Class 4 – Configuration 1 – Category 2

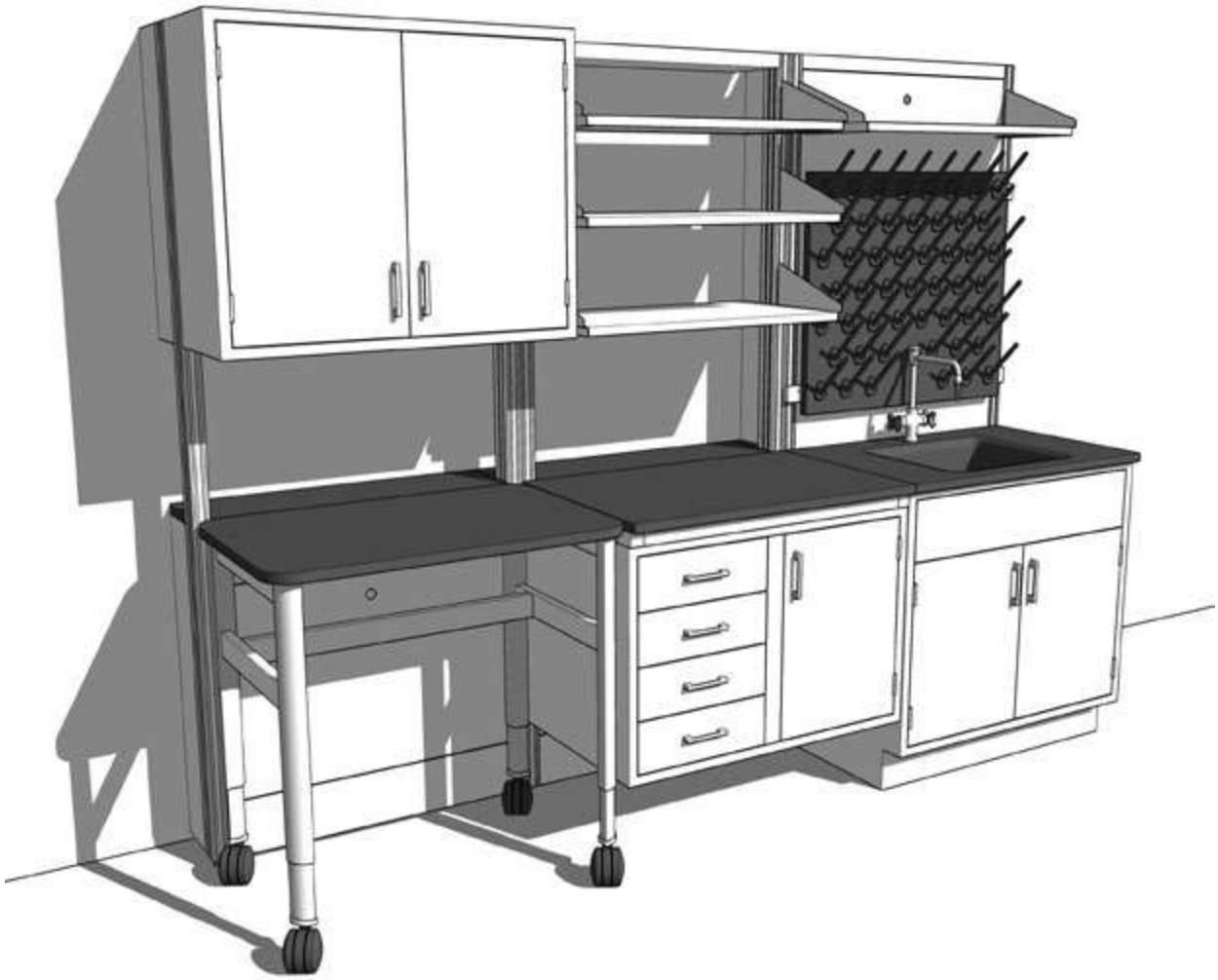

9" Wall Structural Modules

Specifications:

9" Wall Modules are 37" high, with Upper Carrier, 84" high. Both are 9" deep and available in lengths shown.

Modules are available with or without Access Panels. Order without when used with floor mounted base cabinets.

Each module is furnished with hardware for attaching adjacent modules. Wall anchors are not included.

Module Ledge must be ordered separately.

9" Deep Standard Wall Module – 37" High

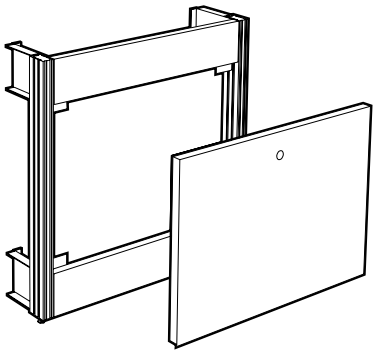

Length	with Access Panel	without Access Panel
24"	**F04M370924N**	**F04N370924N**
30"	**F04M370930N**	**F04N370930N**
36"	**F04M370936N**	**F04N370936N**
42"	**F04M370942N**	**F04N370942N**
48"	**F04M370948N** *	**F04N370948N**
54"	**F04M370954N** *	**F04N370954N**
60"	**F04M370960N** *	**F04N370960N**
66"	**F04M370966N** *	**F04N370966N**
72"	**F04M370972N** *	**F04N370972N**

* Modules 48" long and over are provided with two half-length Access Panels.

9" Deep Standard Wall Module with Upper Carrier – 84" High

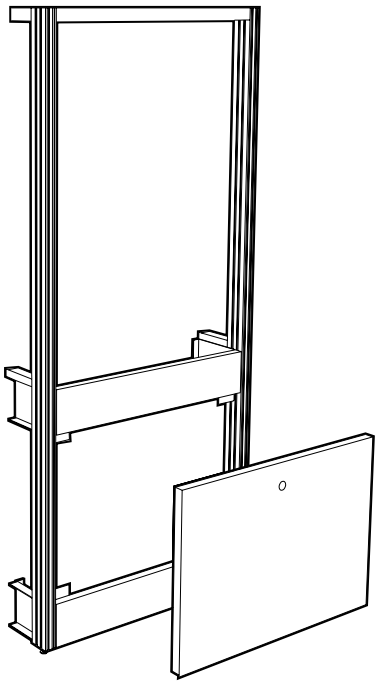

Length	with Access Panel	without Access Panel
24"	**F34M370924N**	**F34N370924N**
30"	**F34M370930N**	**F34N370930N**
36"	**F34M370936N**	**F34N370936N**
42"	**F34M370942N**	**F34N370942N**
48"	**F34M370948N** *	**F34N370948N**
54"	**F34M370954N** *	**F34N370954N**
60"	**F34M370960N** *	**F34N370960N**
66"	**F34M370966N** *	**F34N370966N**
72"	**F34M370972N** *	**F34N370972N**

* Modules 48" long and over are provided with two half-length Access Panels.

KEWAUNEE

9" Wall Structural Modules

Specifications:

Service Riser Wall Modules are 47" high, with Upper Carrier, 84" high. Both are 9" deep and in lengths shown.

Modules are available with or without Access Panels. Order without when used with floor mounted base cabinets.

Each module is furnished with hardware for attaching adjacent modules. Wall anchors are not included.

Module Ledge must be ordered separately.

9" Deep Service Riser Wall Module – 47" High

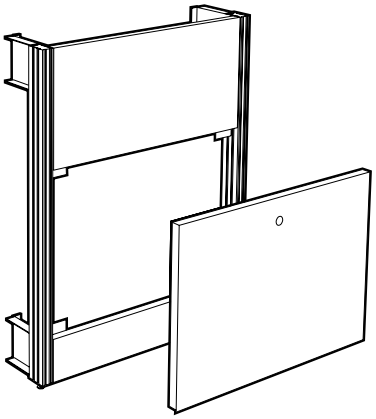

Length	with Access Panel	without Access Panel
24"	**F04M470924N**	**F04N470924N**
30"	**F04M470930N**	**F04N470930N**
36"	**F04M470936N**	**F04N470936N**
42"	**F04M470942N**	**F04N470942N**
48"	**F04M470948N** *	**F04N470948N**
54"	**F04M470954N** *	**F04N470954N**
60"	**F04M470960N** *	**F04N470960N**
66"	**F04M470966N** *	**F04N470966N**
72"	**F04M470972N** *	**F04N470972N**

* Modules 48" long and over are provided with two half-length Access Panels.

9" Deep Service Riser Wall Module with Upper Carrier – 84" High

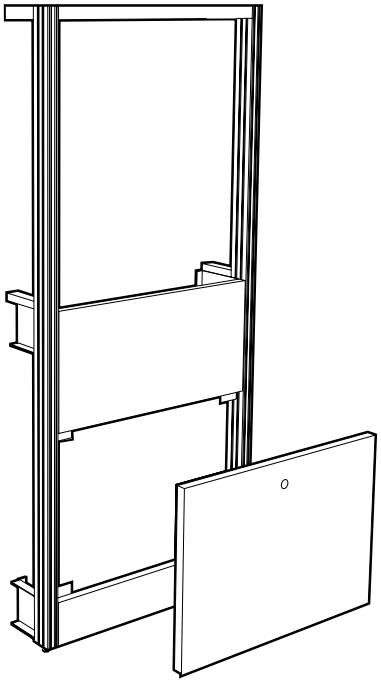

Length	with Access Panel	without Access Panel
24"	**F34M470924N**	**F34N470924N**
30"	**F34M470930N**	**F34N470930N**
36"	**F34M470936N**	**F34N470936N**
42"	**F34M470942N**	**F34N470942N**
48"	**F34M470948N** *	**F34N470948N**
54"	**F34M470954N** *	**F34N470954N**
60"	**F34M470960N** *	**F34N470960N**
66"	**F34M470966N** *	**F34N470966N**
72"	**F34M470972N** *	**F34N470972N**

* Modules 48" long and over are provided with two half-length Access Panels.

9" Wall Structural Modules

Specifications:

9" Wall Modules are 37" high, with Upper Carrier, 84" high. Both are 9" deep and available in lengths shown.

Modules are available with or without Access Panels. Order without when used with floor mounted base cabinets.

24" and 30" long modules have two single-gang electric box cutouts, all other sizes have three.

Each module is furnished with hardware for attaching adjacent modules. Wall anchors are not included.

Module Ledge must be ordered separately.

9" Deep Standard Wall Module with Electric Cutouts – 37" High

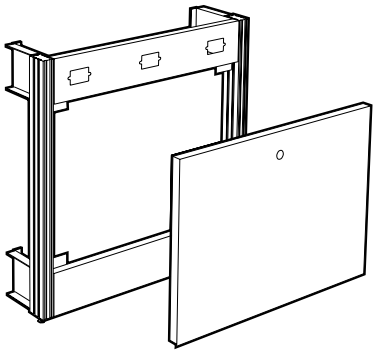

Length	with Access Panel	without Access Panel
24"	**F04M370924E**	**F04N370924E**
30"	**F04M370930E**	**F04N370930E**
36"	**F04M370936E**	**F04N370936E**
42"	**F04M370942E**	**F04N370942E**
48"	**F04M370948E** *	**F04N370948E**
54"	**F04M370954E** *	**F04N370954E**
60"	**F04M370960E** *	**F04N370960E**
66"	**F04M370966E** *	**F04N370966E**
72"	**F04M370972E** *	**F04N370972E**

* Modules 48" long and over are provided with two half-length Access Panels.

9" Deep Standard Wall Module with Electric Cutouts & Upper Carrier – 84" High

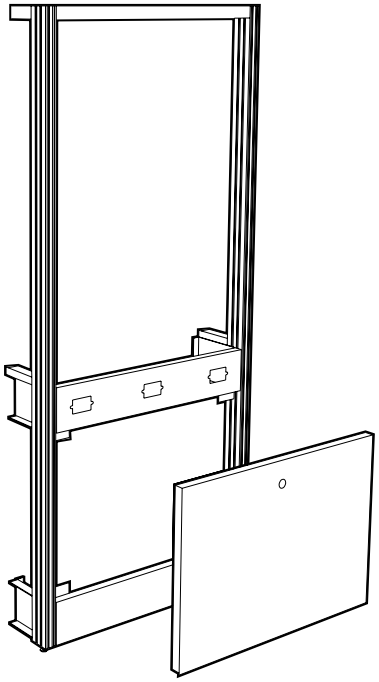

Length	with Access Panel	without Access Panel
24"	**F34M370924E**	**F34N370924E**
30"	**F34M370930E**	**F34N370930E**
36"	**F34M370936E**	**F34N370936E**
42"	**F34M370942E**	**F34N370942E**
48"	**F34M370948E** *	**F34N370948E**
54"	**F34M370954E** *	**F34N370954E**
60"	**F34M370960E** *	**F34N370960E**
66"	**F34M370966E** *	**F34N370966E**
72"	**F34M370972E** *	**F34N370972E**

* Modules 48" long and over are provided with two half-length Access Panels.

KEWAUNEE

9" Wall Structural Modules

Specifications:

Service Riser Wall Modules are 47" high, with Upper Carrier, 84" high. Both are 9" deep and in lengths shown.

Modules are available with or without Access Panels. Order without when used with floor mounted base cabinets.

24" and 30" long modules have two single-gang electric box cutouts, all other sizes have three.

Each module is furnished with hardware for attaching adjacent modules. Wall anchors are not included.

Module Ledge must be ordered separately.

9" Deep Service Riser Wall Module with Electric Cutouts – 47" High

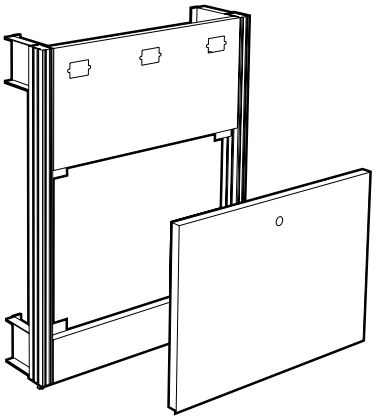

Length	with Access Panel	without Access Panel
24"	**F04M470924E**	**F04N470924E**
30"	**F04M470930E**	**F04N470930E**
36"	**F04M470936E**	**F04N470936E**
42"	**F04M470942E**	**F04N470942E**
48"	**F04M470948E** *	**F04N470948E**
54"	**F04M470954E** *	**F04N470954E**
60"	**F04M470960E** *	**F04N470960E**
66"	**F04M470966E** *	**F04N470966E**
72"	**F04M470972E** *	**F04N470972E**

* Modules 48" long and over are provided with two half-length Access Panels.

9" Deep Service Riser Wall Module with Electric Cutouts & Upper Carrier – 84" High

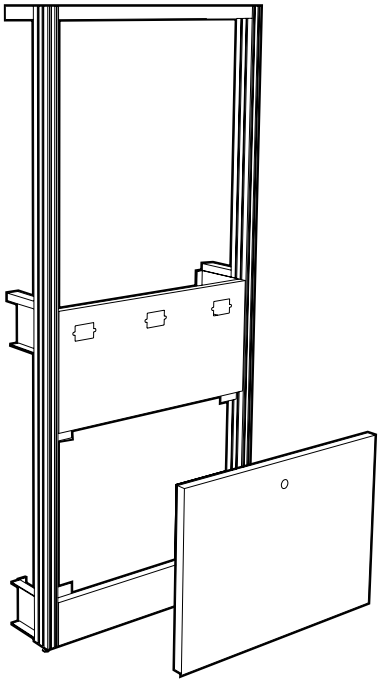

Length	with Access Panel	without Access Panel
24"	**F34M470924E**	**F34N470924E**
30"	**F34M470930E**	**F34N470930E**
36"	**F34M470936E**	**F34N470936E**
42"	**F34M470942E**	**F34N470942E**
48"	**F34M470948E** *	**F34N470948E**
54"	**F34M470954E** *	**F34N470954E**
60"	**F34M470960E** *	**F34N470960E**
66"	**F34M470966E** *	**F34N470966E**
72"	**F34M470972E** *	**F34N470972E**

* Modules 48" long and over are provided with two half-length Access Panels.

9" Wall Structural Modules

Specifications:

9" Wall Modules with Paneled Upper Carrier are the same as standard 9" Wall Modules; except, they are furnished with an easy to remove panel to close off the area between the upper carrier uprights.

When ordered with electric cutouts, 24" and 30" long modules have two single-gang electric box cutouts, all other sizes have three.

Each module is furnished with hardware for attaching to adjacent modules. Wall anchors are not included.

Module Ledge is not required.

9" Deep Standard Wall Module with Paneled Upper Carrier – 84" High

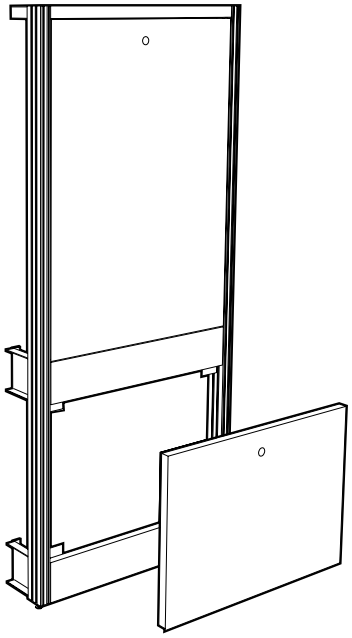

Length	with Lower Access Panel	without Lower Access Panel
24"	**F35M370924N**	**F35N370924N**
30"	**F35M370930N**	**F35N370930N**
36"	**F35M370936N**	**F35N370936N**
42"	**F35M370942N**	**F35N370942N**
48"	**F35M370948N** *	**F35N370948N** *
54"	**F35M370954N** *	**F35N370954N** *
60"	**F35M370960N** *	**F35N370960N** *
66"	**F35M370966N** *	**F35N370966N** *
72"	**F35M370972N** *	**F35N370972N** *

* Modules 48" long and over are provided with half-length removable panels.

9" Deep Standard Wall Module with Electric Cutouts & Paneled Upper Carrier – 84" High

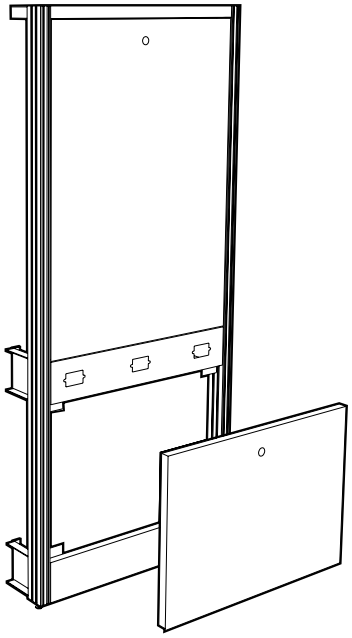

Length	with Lower Access Panel	without Lower Access Panel
24"	**F35M370924E**	**F35N370924E**
30"	**F35M370930E**	**F35N370930E**
36"	**F35M370936E**	**F35N370936E**
42"	**F35M370942E**	**F35N370942E**
48"	**F35M370948E** *	**F35N370948E** *
54"	**F35M370954E** *	**F35N370954E** *
60"	**F35M370960E** *	**F35N370960E** *
66"	**F35M370966E** *	**F35N370966E** *
72"	**F35M370972E** *	**F35N370972E** *

* Modules 48" long and over are provided with half-length removable panels.

9" Wall Structural Modules

Specifications:

Service Riser Wall Modules with Paneled Upper Carrier are the same as standard Service Riser Wall Modules; except, they are furnished with an easy to remove panel to close off the area between the upper carrier uprights.

When ordered with electric cutouts, 24" and 30" long modules have two single-gang electric box cutouts, all other sizes have three.

Each module is furnished with hardware for attaching to adjacent modules. Wall anchors are not included.

Module Ledge is not required.

9" Deep Service Riser Wall Module with Paneled Upper Carrier – 84" High

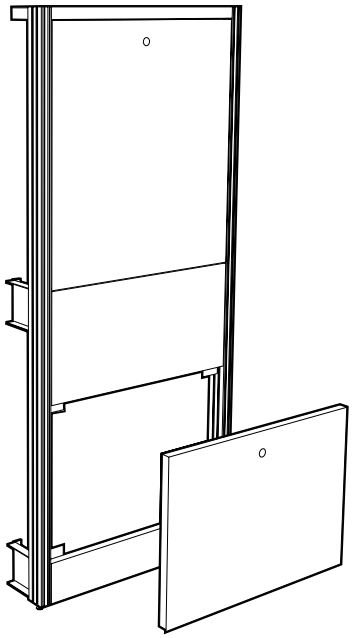

Length	with Lower Access Panel	without Lower Access Panel
24"	**F35M470924N**	**F35N470924N**
30"	**F35M470930N**	**F35N470930N**
36"	**F35M470936N**	**F35N470936N**
42"	**F35M470942N**	**F35N470942N**
48"	**F35M470948N** *	**F35N470948N** *
54"	**F35M470954N** *	**F35N470954N** *
60"	**F35M470960N** *	**F35N470960N** *
66"	**F35M470966N** *	**F35N470966N** *
72"	**F35M470972N** *	**F35N470972N** *

* Modules 48" long and over are provided with half-length removable panels.

9" Deep Service Riser Wall Module with Electric Cutouts & Paneled Upper Carrier – 84" High

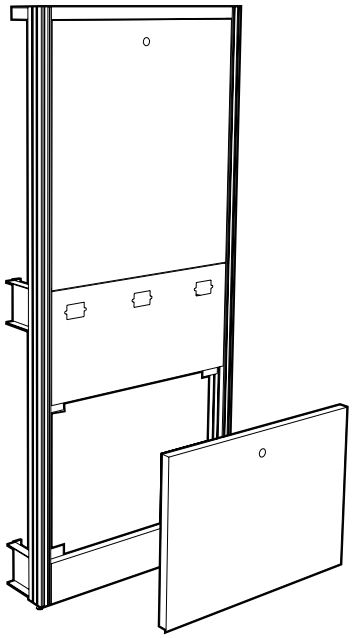

Length	with Lower Access Panel	without Lower Access Panel
24"	**F35M470924E**	**F35N470924E**
30"	**F35M470930E**	**F35N470930E**
36"	**F35M470936E**	**F35N470936E**
42"	**F35M470942E**	**F35N470942E**
48"	**F35M470948E** *	**F35N470948E** *
54"	**F35M470954E** *	**F35N470954E** *
60"	**F35M470960E** *	**F35N470960E** *
66"	**F35M470966E** *	**F35N470966E** *
72"	**F35M470972E** *	**F35N470972E** *

* Modules 48" long and over are provided with half-length removable panels.

9" Wall Structural Modules

Specifications:

Wall Module End Fillers are designed to close off the end of Wall Modules to offer a more finished appearance. They are available in a variety of sizes that may be combined to cover the entire end of the assembly or just a portion.

Wall Module End Fillers are provided with all required installation hardware.

9" Deep Wall Module End Fillers

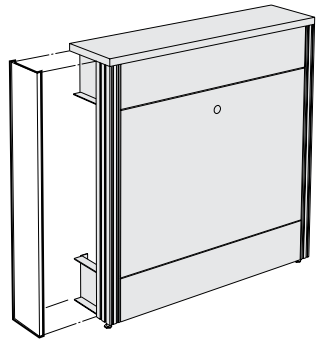

Height	Lower Filler
35"	**F00M360109N**
45"	**F00M460109N**

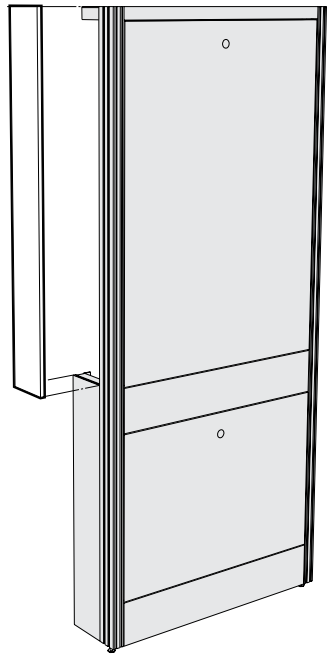

Height	Upper Filler
24"	**F00M240109N**
30"	**F00M300109N**
38"	**F00M380109N**
48"	**F00M480109N**

Add-On Fixed Furniture Upper Carriers

Specifications:

Add-on Fixed Furniture Upper Carriers are designed to add Upper Carriers to existing floor mounted center benches. Each assembly consists of upright extensions and a top frame. They are12" deep with four upright extensions.

Each assembly is furnished with mounting brackets but no fastener. Fasteners must be furnished in field depending on top material.

Upper Carrier Support Struts are especially designed to provide added support to the upper carriers while allowing space for connection of plumbing or electrical connections.

12" Deep Fixed Furniture Upper Carrier

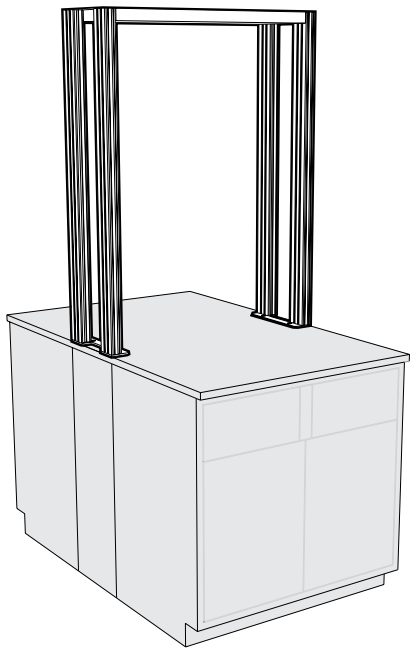

Length	Part Number
24"	**F17N481224N**
30"	**F17N481230N**
36"	**F17N481236N**
42"	**F17N481242N**
48"	**F17N481248N**
54"	**F17N481254N**
60"	**F17N481260N**
66"	**F17N481266N**
72"	**F17N481272N**

Upper Carrier Support Strut

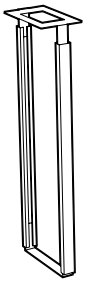

Width	Part Number
12"	**K17M360112N**
14"	**K17M360114N**

Corner & Peninsula Column Modules

Specifications:

Corner and Peninsula Column Modules allow multiple configurations of Island and Wall Structural Modules to form a variety of assemblies. In addition they may be used as a plumbing or electrical drop.

The Column Modules are available in heights to match the Structural Modules. Each module is furnished with removable access panels and attachment hardware.

Module Ledge must be ordered separately.

3" Deep Wall Inside Corner Column

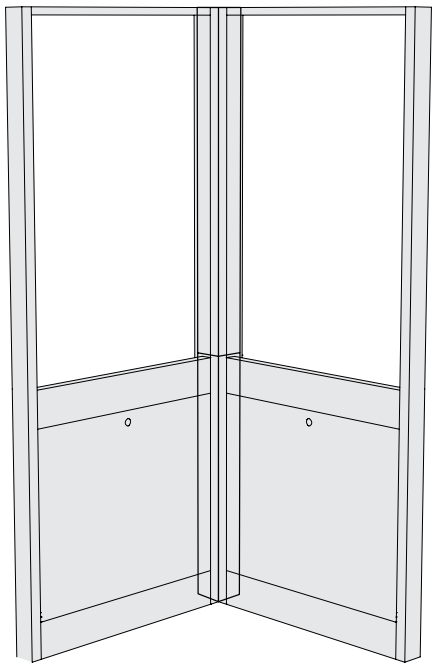

Inside Corner Column

Height	Part Number
36"	**F41M360303N**
38"	**F41M380303N**
46"	**F41M460303N**
48"	**F41M480303N**

Peninsula Column

Height	Part Number
36"	**F42M360312N**
38"	**F42M380312N**
46"	**F42M460312N**
48"	**F42M480312N**

3" Deep Wall Peninsula Corner Column

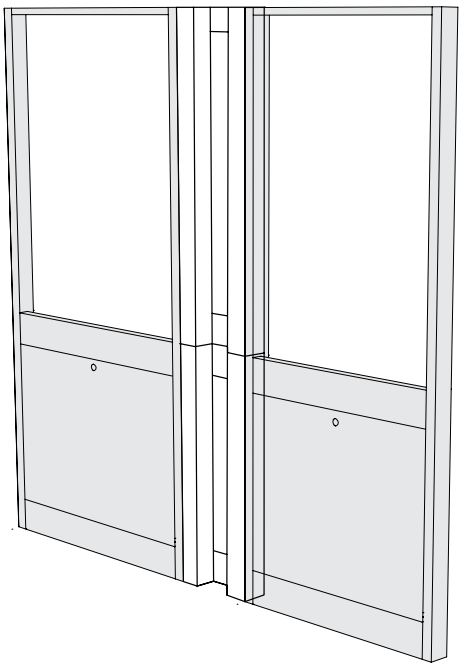

9" Deep Wall Inside Corner Column

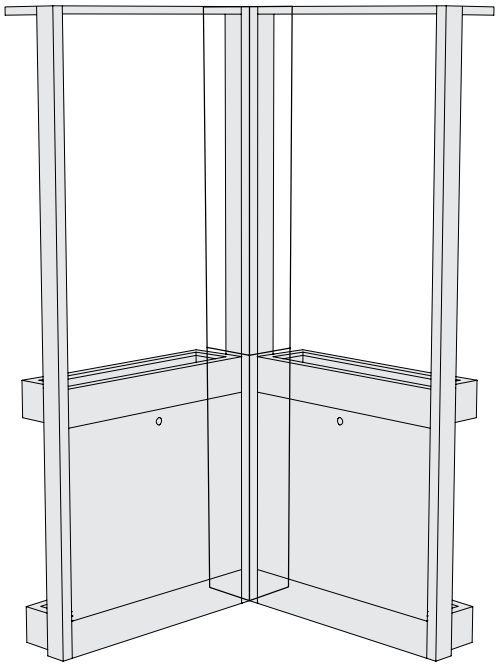

Inside Corner Column

Height	Part Number
36"	**F41M360909N**
38"	**F41M380909N**
46"	**F41M460909N**
48"	**F41M480909N**

Peninsula Column

Height	Part Number
36"	**F42M360912N**
38"	**F42M380912N**
46"	**F42M460912N**
48"	**F42M480912N**

9" Deep Wall Peninsula Corner Column

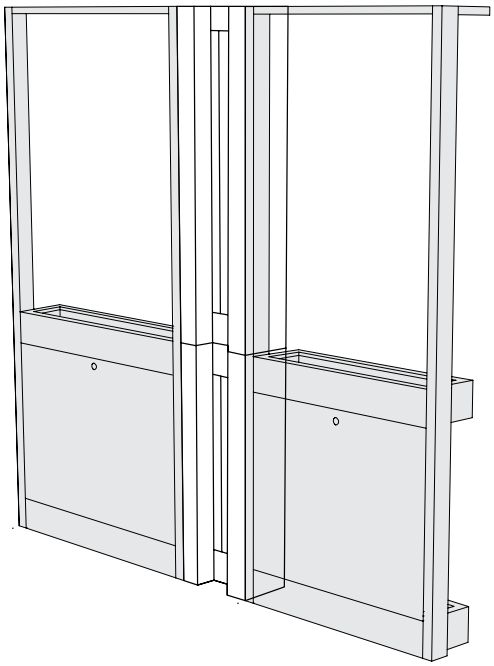

Corner & Peninsula Column Modules

Specifications:

Corner and Peninsula Column Modules allow multiple configurations of Island and Wall Structural Modules to form a variety of assemblies. In addition they may be used as a plumbing or electrical drop.

The Column Modules are available in heights to match the Structural Modules. Each module is furnished with removable access panels and attachment hardware.

Module Ledge must be ordered separately.

12" Island Corner Column

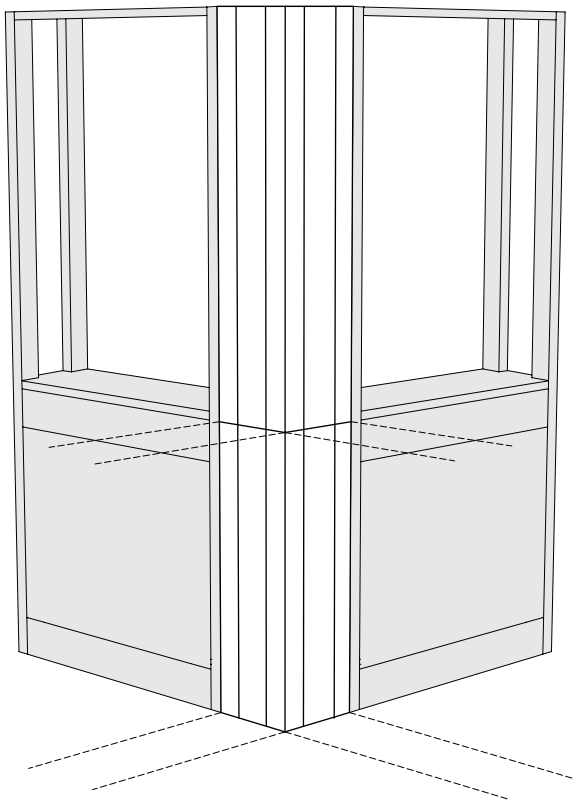

Height	Part Number
36"	**F40M361212N**
38"	**F40M381212N**
46"	**F40M461212N**
48"	**F40M481212N**

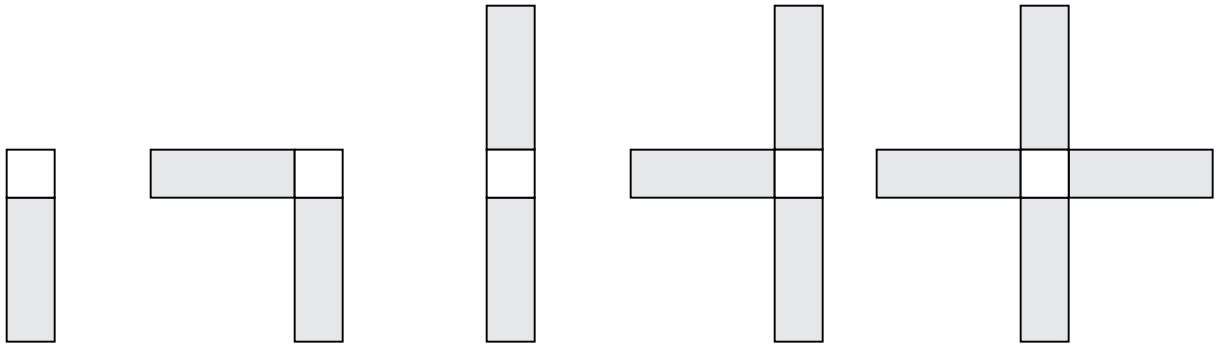

Possible Alpha System Assembly configurations using Island Corner Column Modules

Shelving - Worksurface & Table Frames

Features:

- Adjustable Module Shelving
  - available in five depths
  - available in steel, wood, and phenolic resin
  - available with and without retaining lips
  - adjustable on 1" increments
  - may be mounted above or below Worksurface frames
- Adjustable Core Shelving
  - infinitely height adjustable
  - available in steel only
- Adjustable Height Cantilevered Worksurface Frame
  - supports Worksurface Top and Suspended Base Cabinets
  - fabricated of 1⅝" steel channels
  - easily positioned on 1" increments
- Adjustable Height Mobile Table Frame

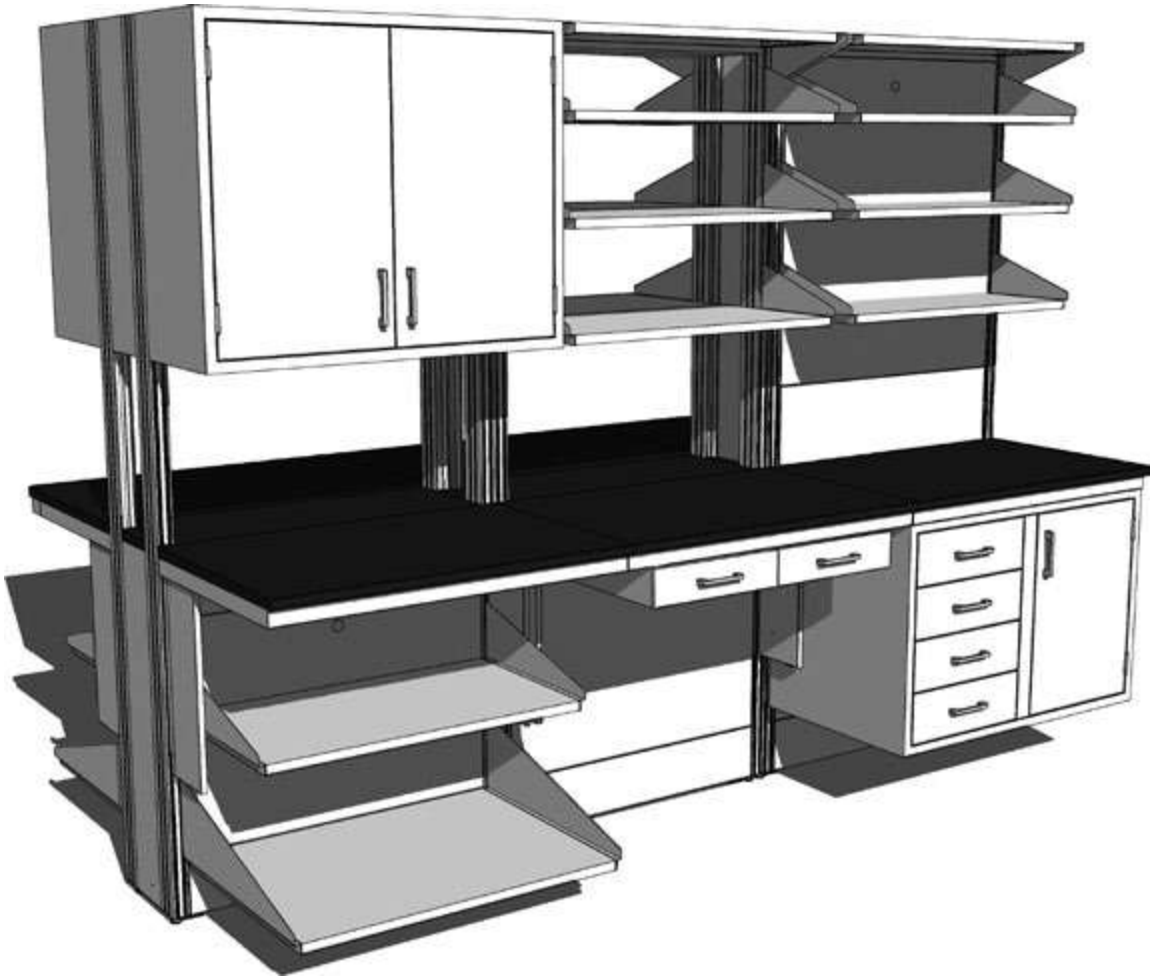

KEWAUNEE

Adjustable Module Shelving

Specifications:

Upper Carrier Module Adjustable Core Shelves are formed of 16 gauge cold rolled steel. They are supported by four Support Clips that engage the side slots on the Module Uprights making the shelves infinitely adjustable. Available for 12" Island Module Upper Carriers only.

Adjustable Top Shelves are formed of 16 gauge cold rolled steel and are supported from below by 11 gauge steel brackets that engage the outer slot of the double slotted Structure Module Upright. Designed to be used at the top of the Module Upper Carrier.

Upper Carrier Module Adjustable Core Shelves

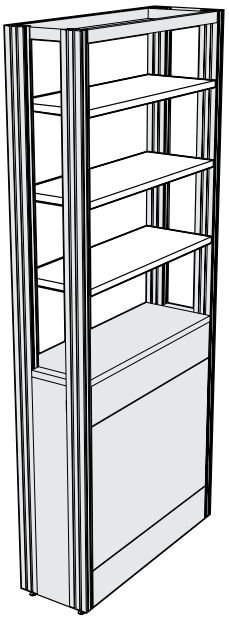

Length	Core Shelf
24"	**F29M011224N**
30"	**F29M011230N**
36"	**F29M011236N**
42"	**F29M011242N**
48"	**F29M011248N**
54"	**F29M011254N**
60"	**F29M011260N**
66"	**F29M011266N**
72"	**F29M011272N**

Core Shelf Support Clip

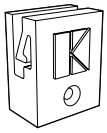

F69C020101N pair

May also be used to add support to Pass-Thru Shelves. Furnished in pairs with bolt and nut to attach to side slots in Module Uprights.

Furnished standard with Upper Carrier Module Adjustable Core Shelves.

Upper Carriers Module Adjustable Top Shelves

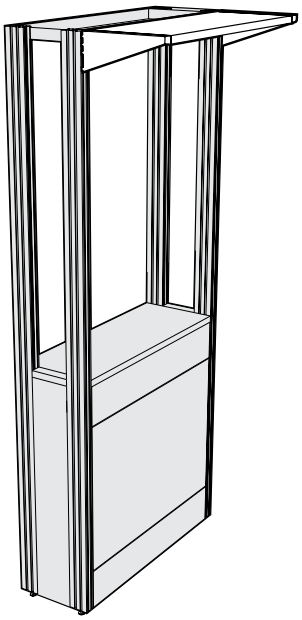

	Length	Painted Steel
9" DEEP SHELF 9" Deep Bracket	24"	**F28M040924N**
	30"	**F28M040930N**
	36"	**F28M040936N**
	42"	**F28M040942N**
	48"	**F28M040948N**
	54"	**F28M040954N**
	60"	**F28M040960N**
	66"	**F28M040966N**
	72"	**F28M040972N**
12" DEEP SHELF 12" Deep Bracket	24"	**F28M051224N**
	30"	**F28M051230N**
	36"	**F28M051236N**
	42"	**F28M051242N**
	48"	**F28M051248N**
	54"	**F28M051254N**
	60"	**F28M051260N**
	66"	**F28M051266N**
	72"	**F28M051272N**

Adjustable Module Shelf Assembly

Specifications:

Adjustable Module Shelf Assemblies consist of a pair of 11 gauge steel Shelf Brackets and a Shelf. The Shelf Bracket engages the inner slot of the double slotted Structural Module Upright and is adjustable on 1" centers. Shelves are available in Painted Steel, Veneer Plywood, or Phenolic Resin.

Painted Steel Shelves – 1" thick, formed from 16 gauge cold rolled steel.

Veneer Plywood Shelves – 1" thick hardwood plywood with matching veneer on all exposed surfaces.

Phenolic Resin – 1" thick black phenolic resin.

Open Front Adjustable Module Shelves

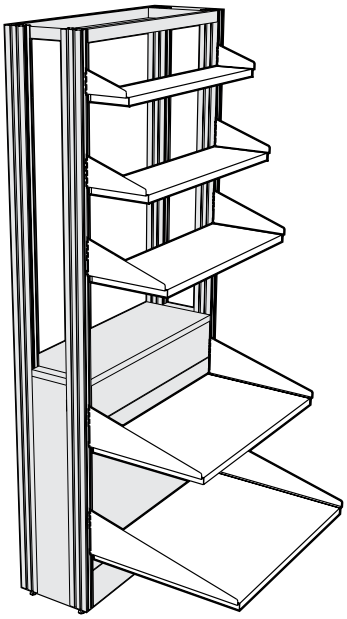

	Length	Painted Steel	Veneer Plywood	Phenolic Resin
6" DEEP SHELF 6" Deep Bracket	24"	**F21M030624N**	**F21W030624N**	**F21T030624N**
	30"	**F21M030630N**	**F21W030630N**	**F21T030630N**
	36"	**F21M030636N**	**F21W030636N**	**F21T030636N**
	42"	**F21M030642N**	**F21W030642N**	**F21T030642N**
	48"	**F21M030648N**	**F21W030648N**	**F21T030648N**
	54"	**F21M030654N**		
	60"	**F21M030660N**		
	66"	**F21M030666N**		
	72"	**F21M030672N**		
9" DEEP SHELF 9" Deep Bracket	24"	**F21M040924N**	**F21W040924N**	**F21T040924N**
	30"	**F21M040930N**	**F21W040930N**	**F21T040930N**
	36"	**F21M040936N**	**F21W040936N**	**F21T040936N**
	42"	**F21M040942N**	**F21W040942N**	**F21T040942N**
	48"	**F21M040948N**	**F21W040948N**	**F21T040948N**
	54"	**F21M040954N**		
	60"	**F21M040960N**		
	66"	**F21M040966N**		
	72"	**F21M040972N**		
12" DEEP SHELF 12" Deep Bracket	24"	**F21M051224N**	**F21W051224N**	**F21T051224N**
	30"	**F21M051230N**	**F21W051230N**	**F21T051230N**
	36"	**F21M051236N**	**F21W051236N**	**F21T051236N**
	42"	**F21M051242N**	**F21W051242N**	**F21T051242N**
	48"	**F21M051248N**	**F21W051248N**	**F21T051248N**
	54"	**F21M051254N**		
	60"	**F21M051260N**		
	66"	**F21M051266N**		
	72"	**F21M051272N**		
18" DP SHELF 18" Deep Bracket	24"	**F21M061824N**	**F21W061824N**	**F21T061824N**
	30"	**F21M061830N**	**F21W061830N**	**F21T061830N**
	36"	**F21M061836N**	**F21W061836N**	**F21T061836N**
	42"	**F21M061842N**	**F21W061842N**	**F21T061842N**
	48"	**F21M061848N**	**F21W061848N**	**F21T061848N**
	54"	**F21M061854N**		
	60"	**F21M061860N**		
24" DP SHELF 24" Deep Bracket	24"	**F21M072424N**	**F21W072424N**	**F21T072424N**
	30"	**F21M072430N**	**F21W072430N**	**F21T072430N**
	36"	**F21M072436N**	**F21W072436N**	**F21T072436N**
	42"	**F21M072442N**	**F21W072442N**	**F21T072442N**
	48"	**F21M072448N**	**F21W072448N**	**F21T072448N**
	54"	**F21M072454N**		
	60"	**F21M072460N**		

Veneer Plywood Material is specified by adding **-_** to the end of the part number **ex: F21W072424n-2**

1 = Red Oak
2 = White Maple
7 = Steamed Beech
5 = FSC® Red Oak
6 = FSC® White Maple
8 = FSC® Steamed Beech

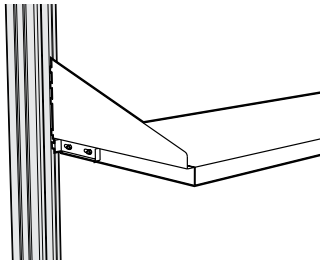

Optional Shelf Locking Tab

Sliding tab mounted on Shelf Bracket locks Shelf into Module Upright to keep it from being accidently removed.

To specify, add an **-K** to the end of the Shelf Assembly part number.

Example: **F21M051236N-K**

KEWAUNEE

Adjustable Pass-thru Shelf Assemblies

Specifications:

Pass-thru Module Shelf Assemblies for 6" Partition Modules have Shelves three inches deeper than the Shelf Bracket to allow the shelf to pass through the module core and form a continuous surface. These shelves may also be moved forward and mounted to form a 2" cord gap between the shelves. Shelf Brackets are 11 gauge steel, adjustable on 1" centers.

Painted Steel Shelves – 1" thick, formed from 16 gauge cold rolled steel.

Veneer Plywood Shelves – 1" thick hardwood plywood with matching veneer on all exposed surfaces.

Phenolic Resin – 1" thick black phenolic resin.

Adjustable Pass-thru Shelf Assemblies for 6" Partition Modules

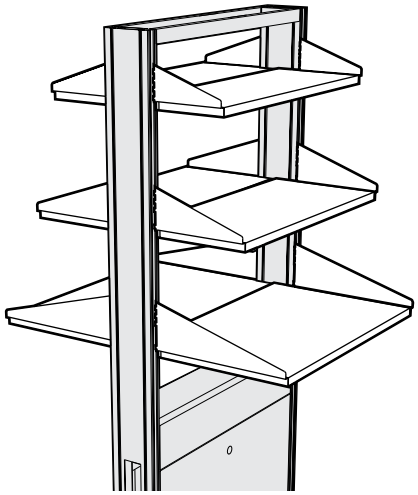

Pass-Thru Shelves

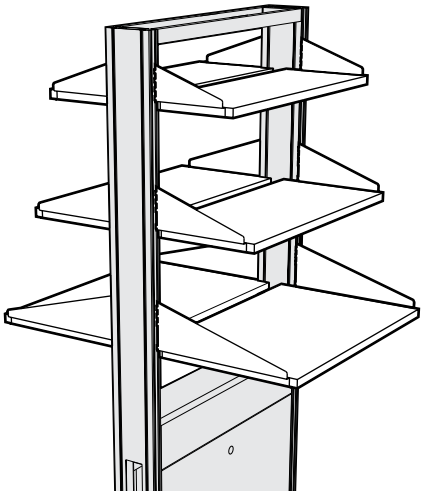

Pass-Thru Shelves with Cord Gap

	Length	Painted Steel	Veneer Plywood	Phenolic Resin
9" DEEP SHELF 6" Deep Bracket	24"	**F21M030624R**	**F21W030624R**	**F21T030624R**
	30"	**F21M030630R**	**F21W030630R**	**F21T030630R**
	36"	**F21M030636R**	**F21W030636R**	**F21T030636R**
	42"	**F21M030642R**	**F21W030642R**	**F21T030642R**
	48"	**F21M030648R**	**F21W030648R**	**F21T030648R**
	54"	**F21M030654R**		
	60"	**F21M030660R**		
	66"	**F21M030666R**		
	72"	**F21M030672R**		
12" DEEP SHELF 9" Deep Bracket	24"	**F21M040924R**	**F21W040924R**	**F21T040924R**
	30"	**F21M040930R**	**F21W040930R**	**F21T040930R**
	36"	**F21M040936R**	**F21W040936R**	**F21T040936R**
	42"	**F21M040942R**	**F21W040942R**	**F21T040942R**
	48"	**F21M040948R**	**F21W040948R**	**F21T040948R**
	54"	**F21M040954R**		
	60"	**F21M040960R**		
	66"	**F21M040966R**		
	72"	**F21M040972R**		
15" DEEP SHELF 12" Deep Bracket	24"	**F21M051224R**	**F21W051224R**	**F21T051224R**
	30"	**F21M051230R**	**F21W051230R**	**F21T051230R**
	36"	**F21M051236R**	**F21W051236R**	**F21T051236R**
	42"	**F21M051242R**	**F21W051242R**	**F21T051242R**
	48"	**F21M051248R**	**F21W051248R**	**F21T051248R**
	54"	**F21M051254R**		
	60"	**F21M051260R**		
	66"	**F21M051266R**		
	72"	**F21M051272R**		
21" DEEP SHELF 18" Deep Bracket	24"	**F21M061824R**	**F21W061824R**	**F21T061824R**
	30"	**F21M061830R**	**F21W061830R**	**F21T061830R**
	36"	**F21M061836R**	**F21W061836R**	**F21T061836R**
	42"	**F21M061842R**	**F21W061842R**	**F21T061842R**
	48"	**F21M061848R**	**F21W061848R**	**F21T061848R**
	54"	**F21M061854R**		
	60"	**F21M061860R**		

Veneer Plywood Material is specified by adding **-_** to the end of the part number **ex: F21W061824S-2**

1 = Red Oak
2 = White Maple
7 = Steamed Beech
5 = FSC® Red Oak
6 = FSC® White Maple
8 = FSC® Steamed Beech

Optional Shelf Locking Tab

Sliding tab mounted on Shelf Bracket locks Shelf into Module Upright to keep it from being accidently removed.

To specify, add an **-K** to the end of the Shelf Assembly part number. Example: **F21M051236N-K**

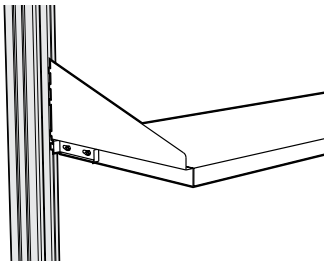

Optional Shelf Locking Tab

Adjustable Pass-thru Shelf Assemblies

Specifications:

Pass-thru Shelf Assemblies for 12" Island Modules are six inches deeper than the Shelf Bracket to allow the Shelf to pass through the module core and form a continuous surface. These shelves may also be moved forward and mounted to form a 2" cord gap between the shelves. Shelf Brackets are 11 gauge steel, adjustable on 1" centers.

Painted Steel Shelves – 1" thick, formed from 16 gauge cold rolled steel.

Veneer Plywood Shelves – 1" thick hardwood plywood with matching veneer on all exposed surfaces.

Phenolic Resin – 1" thick phenolic resin.

Adjustable Pass-thru Shelf Assemblies for 12" Island Modules

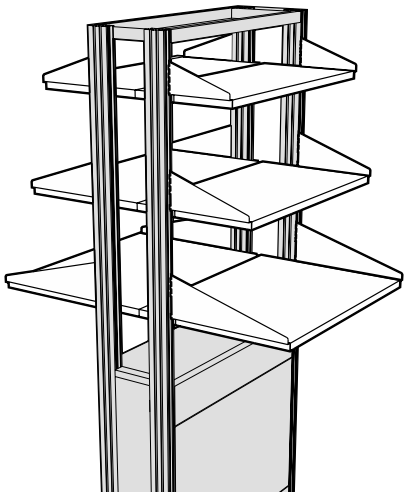

Pass-Thru Shelves

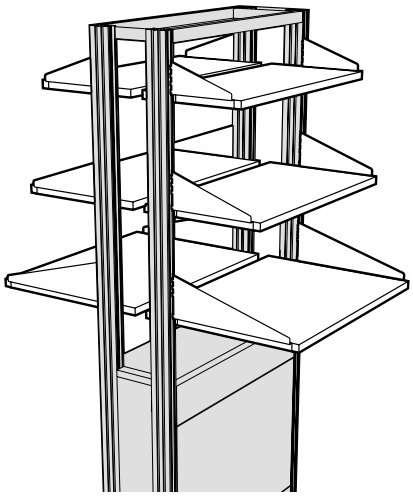

Pass-Thru Shelves with Cord Gap

	Length	Painted Steel	Veneer Plywood	Phenolic Resin
15" DEEP SHELF 9" Deep Bracket	24"	**F21M040924X**	**F21W040924X**	**F21T040924X**
	30"	**F21M040930X**	**F21W040930X**	**F21T040930X**
	36"	**F21M040936X**	**F21W040936X**	**F21T040936X**
	42"	**F21M040942X**	**F21W040942X**	**F21T040942X**
	48"	**F21M040948X**	**F21W040948X**	**F21T040948X**
	54"	**F21M040954X**		
	60"	**F21M040960X**		
	66"	**F21M040966X**		
	72"	**F21M040972X**		
18" DEEP SHELF 12" Deep Bracket	24"	**F21M051224X**	**F21W051224X**	**F21T051224X**
	30"	**F21M051230X**	**F21W051230X**	**F21T051230X**
	36"	**F21M051236X**	**F21W051236X**	**F21T051236X**
	42"	**F21M051242X**	**F21W051242X**	**F21T051242X**
	48"	**F21M051248X**	**F21W051248X**	**F21T051248X**
	54"	**F21M051254X**		
	60"	**F21M051260X**		
	66"	**F21M051266X**		
	72"	**F21M051272X**		
24" DEEP SHELF 18" Deep Bracket	24"	**F21M061824X**	**F21W061824X**	**F21T061824X**
	30"	**F21M061830X**	**F21W061830X**	**F21T061830X**
	36"	**F21M061836X**	**F21W061836X**	**F21T061836X**
	42"	**F21M061842X**	**F21W061842X**	**F21T061842X**
	48"	**F21M061848X**	**F21W061848X**	**F21T061848X**
	54"	**F21M061854X**		
	60"	**F21M061860X**		

Veneer Plywood Material is specified by adding **-_** to the end of the part number **ex: F21W061824X-2**

1 = Red Oak
2 = White Maple
7 = Steamed Beech
5 = FSC® Red Oak
6 = FSC® White Maple
8 = FSC® Steamed Beech

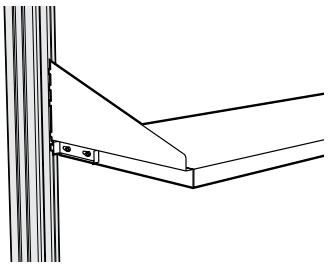

Optional Shelf Locking Tab

Optional Shelf Locking Tab

Sliding tab mounted on Shelf Bracket locks Shelf into Module Upright to keep it from being accidently removed.

To specify, add an **-K** to the end of the Shelf Assembly part number. Example: **F21M051236N-K**

KEWAUNEE

Module Shelves

Specifications:

Module Shelves are available without Shelf Brackets for custom applications and for replacement. These are the same Shelves that are furnished with Adjustable Module and Pass-Thru Shelf Assemblies except they are not furnished with Shelf Brackets or attachment hardware.

Shelf Brackets are available separately.

Painted Steel Shelves – 1" thick, formed from 16 gauge cold rolled steel.

Veneer Plywood Shelves – 1" thick hardwood plywood with matching veneer on all exposed surfaces.

Phenolic Resin – 1" thick black phenolic resin.

Actual Shelf Length 3⅝" less than Module Length

Module Shelves without Shelf Brackets

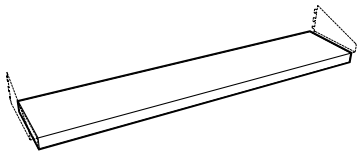

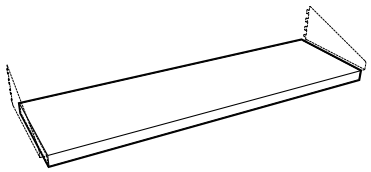

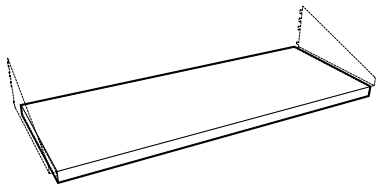

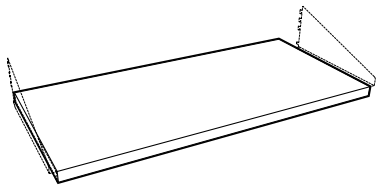

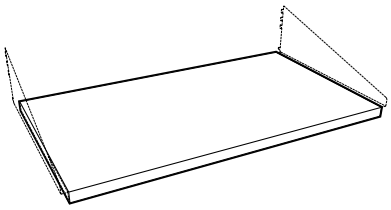

	Module Length	*(actual shelf length 3½" less than module length)* Painted Steel	Veneer Plywood	Phenolic Resin
6" DEEP	24"	**F24M010624N**	**F24W010624N**	**F24T010624N**
	30"	**F24M010630N**	**F24W010630N**	**F24T010630N**
	36"	**F24M010636N**	**F24W010636N**	**F24T010636N**
	42"	**F24M010642N**	**F24W010642N**	**F24T010642N**
	48"	**F24M010648N**	**F24W010648N**	**F24T010648N**
	54"	**F24M010654N**		
	60"	**F24M010660N**		
	66"	**F24M010666N**		
	72"	**F24M010672N**		
9" DEEP	24"	**F24M010924N**	**F24W010924N**	**F24T010924N**
	30"	**F24M010930N**	**F24W010930N**	**F24T010930N**
	36"	**F24M010936N**	**F24W010936N**	**F24T010936N**
	42"	**F24M010942N**	**F24W010942N**	**F24T010942N**
	48"	**F24M010948N**	**F24W010948N**	**F24T010948N**
	54"	**F24M010954N**		
	60"	**F24M010960N**		
	66"	**F24M010966N**		
	72"	**F24M010972N**		
12" DEEP	24"	**F24M011224N**	**F24W011224N**	**F24T011224N**
	30"	**F24M011230N**	**F24W011230N**	**F24T011230N**
	36"	**F24M011236N**	**F24W011236N**	**F24T011236N**
	42"	**F24M011242N**	**F24W011242N**	**F24T011242N**
	48"	**F24M011248N**	**F24W011248N**	**F24T011248N**
	54"	**F24M011254N**		
	60"	**F24M011260N**		
	66"	**F24M011266N**		
	72"	**F24M011272N**		
15" DEEP	24"	**F24M011524N**	**F24W011524N**	**F24T011524N**
	30"	**F24M011530N**	**F24W011530N**	**F24T011530N**
	36"	**F24M011536N**	**F24W011536N**	**F24T011536N**
	42"	**F24M011542N**	**F24W011542N**	**F24T011542N**
	48"	**F24M011548N**	**F24W011548N**	**F24T011548N**
	54"	**F24M011554N**		
	60"	**F24M011560N**		
	66"	**F24M011566N**		
	72"	**F24M011572N**		
18" DEEP	24"	**F24M011824N**	**F24W011824N**	**F24T011824N**
	30"	**F24M011830N**	**F24W011830N**	**F24T011830N**
	36"	**F24M011836N**	**F24W011836N**	**F24T011836N**
	42"	**F24M011842N**	**F24W011842N**	**F24T011842N**
	48"	**F24M011848N**	**F24W011848N**	**F24T011848N**
	54"	**F24M011854N**		
	60"	**F24M011860N**		

Veneer Plywood Material is specified by adding **-_** to the end of the part number **ex: F24W011824N-2**

1 = Red Oak
2 = White Maple
7 = Steamed Beech
5 = FSC® Red Oak
6 = FSC® White Maple
8 = FSC® Steamed Beech

Module Shelves & Shelf Brackets

Specifications:

Module Shelves are available without Shelf Brackets for custom applications and for replacement. These are the same Shelves that are furnished with Adjustable Module and Pass-Thru Shelf Assemblies except they are not furnished with Shelf Brackets or attachment hardware.

Shelf Brackets are available separately.

Painted Steel Shelves – 1" thick, formed from 16 gauge cold rolled steel.

Veneer Plywood Shelves – 1" thick hardwood plywood with matching veneer on all exposed surfaces.

Phenolic Resin – 1" thick black phenolic resin.

Module Shelves without Shelf Brackets

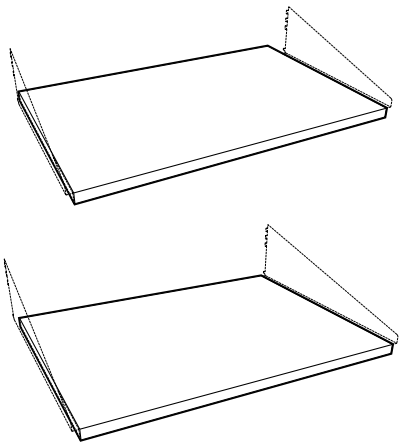

	Module Length	*(actual shelf length 3½" less than module length)* Painted Steel	Veneer Plywood	Phenolic Resin
21" DEEP	24"	**F24M012124N**	**F24W012124N**	**F24T012124N**
	30"	**F24M012130N**	**F24W012130N**	**F24T012130N**
	36"	**F24M012136N**	**F24W012136N**	**F24T012136N**
	42"	**F24M012142N**	**F24W012142N**	**F24T012142N**
	48"	**F24M012148N**	**F24W012148N**	**F24T012148N**
	54"	**F24M012154N**		
	60"	**F24M012160N**		
24" DEEP	24"	**F24M012424N**	**F24W012424N**	**F24T012424N**
	30"	**F24M012430N**	**F24W012430N**	**F24T012430N**
	36"	**F24M012436N**	**F24W012436N**	**F24T012436N**
	42"	**F24M012442N**	**F24W012442N**	**F24T012442N**
	48"	**F24M012448N**	**F24W012448N**	**F24T012448N**
	54"	**F24M012454N**		
	60"	**F24M012460N**		

Veneer Plywood Material is specified by adding **-_** to the end of the part number **ex: F24W011224N-2**

1 = Red Oak
2 = White Maple
7 = Steamed Beech
5 = FSC® Red Oak
6 = FSC® White Maple
8 = FSC® Steamed Beech

Shelf Brackets for Steel Shelves (in pairs)

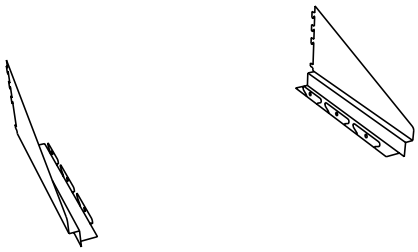

Depth	Shelf Brackets w/o Locking Tabs	Shelf Brackets with Locking Tabs
6"	**F20M030602N**	**F20M030602N-K** pair
9"	**F20M040902N**	**F20M040902N-K** pair
12"	**F20M051202N**	**F20M051202N-K** pair
18"	**F20M061802N**	**F20M061802N-K** pair
24"	**F20M072402N**	**F20M072402N-K** pair

Shelf Brackets for Wood & Phenolic Resin Shelves (in pairs)

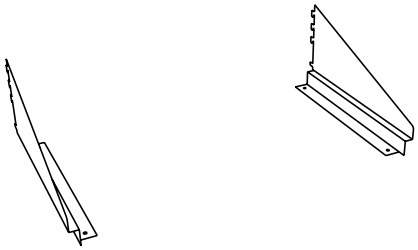

Depth	Shelf Brackets w/o Locking Tabs	Shelf Brackets with Locking Tabs
6"	**F20N030602N**	**F20N030602N-K** pair
9"	**F20N040902N**	**F20N040902N-K** pair
12"	**F20N051202N**	**F20N051202N-K** pair
18"	**F20N061802N**	**F20N061802N-K** pair
24"	**F20N072402N**	**F20N072402N-K** pair

KEWAUNEE

Shelves Retaining Lips & Light Fixtures

Specifications:

Shelf Retaining Lips are designed to be added to Adjustable Core Shelves, Module Shelves, Adjustable Module Shelf Assemblies, and Adjustable Pass-Thru Shelf Assemblies. Steel Shelf Lips may be mounted to steel, wood or phenolic resin shelves with supplied screws. Lips are 1⅝" in height

Under Cabinet Light Fixtures are thin-profile, specification grade, with white, painted steel housing, 1" high by 3½" deep in lengths shown. UL listed and furnished with rocker switch, single outlet, lamp, and six foot cord.

Shelf Retaining Lips

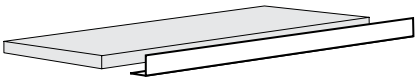

Designed to be added to Adjustable Core Shelves, Module Shelves, Adjustable Module Shelf Assemblies, and Adjustable Pass-Thru Shelf Assemblies. Steel and Stainless Steel Shelf Lips may be mounted to steel, wood or phenolic resin shelves with supplied screws.

Length	Painted Steel	Stainless Steel	
24"	**F63M020124N**	**F63S020124N**	each
30"	**F63M020130N**	**F63S020130N**	each
36"	**F63M020136N**	**F63S020136N**	each
42"	**F63M020142N**	**F63S020142N**	each
48"	**F63M020148N**	**F63S020148N**	each
54"	**F63M020154N**	**F63S020154N**	each
60"	**F63M020160N**	**F63S020160N**	each
66"	**F63M020166N**	**F63S020166N**	each
72"	**F63M020172N**	**F63S020172N**	each

Task Lighting

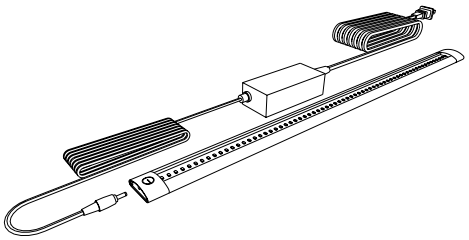

Part Number	Length
X-030001-00	300mm – 11⅞"
X-030002-00	500mm – 19⅝"
X-030003-00	1000mm – 39⅜"

LED Task Lighting consists of a thin-profile, white, LED strip, 9.5mm high by 33mm deep with a touch dimmer switch. It is UL listed and furnished with 120 VAC to 24 VDC power supply with ten foot power cord. The light includes a magnetic mounting strip for mounting to steel shelving and integral tabs for mounting to wood and plastic laminate.

Shelving Uprights

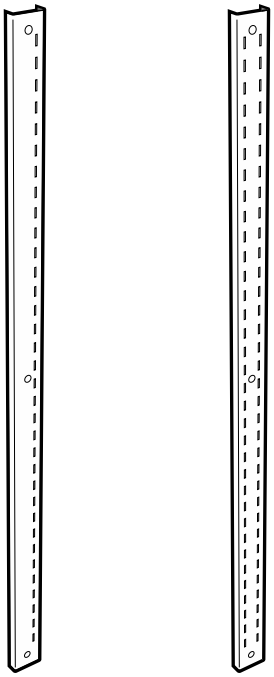

Painted Steel Uprights

Length	Single Slot Upright	Double Slot Upright	
24"	**F13M240102N**	**F12M240102N**	each
30"	**F13M300102N**	**F12M300102N**	each
36"	**F13M360102N**	**F12M360102N**	each
42"	**F13M420102N**	**F12M420102N**	each
48"	**F13M480102N**	**F12M480102N**	each
72"	**F13M720102N**	**F12M720102N**	each
79"	**F13M790102N**	**F12M790102N**	each
84"	**F13M840102N**	**F12M840102N**	each

Stainless Steel Uprights

Length	Single Slot Upright	Double Slot Upright	
24"	**F13S240102N**	**F12S240102N**	each
30"	**F13S300102N**	**F12S300102N**	each
36"	**F13S360102N**	**F12S360102N**	each
42"	**F13S420102N**	**F12S420102N**	each
48"	**F13S480102N**	**F12S480102N**	each
72"	**F13S720102N**	**F12S720102N**	each
79"	**F13S790102N**	**F12S790102N**	each
84"	**F13S840102N**	**F12S840102N**	each

Designed to be used with Adjustable Module Shelving Assemblies to create wall mounted shelving.

Adjustable Height Worksurface Frames

Specifications:

Adjustable Height Cantilevered Worksurface Frames engage the outer slot of the double slotted Structural Module Upright and adjusts in height on 1" increments. Fabricated from steel channels and an 11 gauge steel hanging bracket.

The Optional Adjustable Height Support Legs may be added to any Worksurface Frame to add strength. Fabricated from aluminum tubing with an adjustable glide at the bottom of the leg, they may be added or removed as required

Worksurface Top must be ordered separately.

Adjustable Height Cantilevered Worksurface Frame – 23¼" Deep

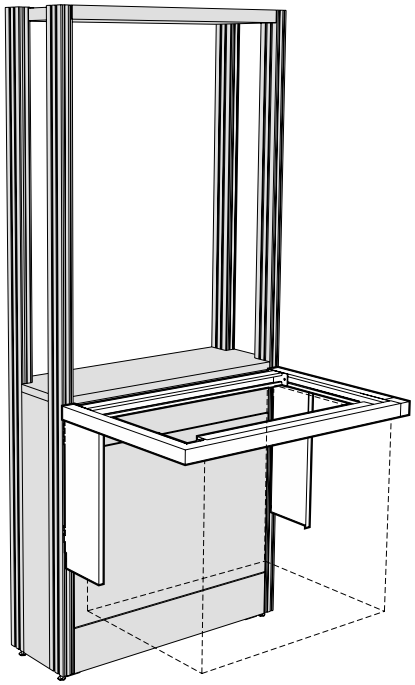

Length	23¼" Deep Frame
24"	**F80M372324N**
30"	**F80M372330N**
36"	**F80M372336N**
42"	**F80M372342N**
48"	**F80M372348N**
54"	**F80M372354N**
60"	**F80M372360N**
66"	**F80M372366N**
72"	**F80M372372N**

Adjustable Height Worksurface Frames

Specifications:

Adjustable Height Cantilevered Worksurface Frames engage the outer slot of the double slotted Structural Module Upright and adjusts in height on 1" increments. Fabricated from steel channels and an 11 gauge steel hanging bracket.

Worksurface Top must be ordered separately.

The Optional Adjustable Height Support Legs may be added to any Worksurface Frame to add strength. Fabricated from aluminum tubing with an adjustable glide at the bottom of the leg, they may be added or removed as required.

Adjustable Height Cantilevered Worksurface Frame – 29¼" Deep

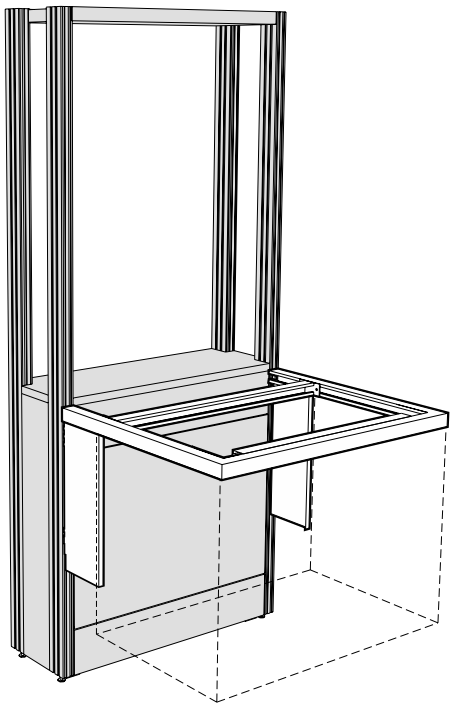

Length	29¼" Deep Frame
24"	**F80M372924N**
30"	**F80M372930N**
36"	**F80M372936N**
42"	**F80M372942N**
48"	**F80M372948N**
54"	**F80M372954N**
60"	**F80M372960N**
66"	**F80M372966N**
72"	**F80M372972N**

Adjustable Height Worksurface Frames

Specifications:

Adjustable Height Cantilevered Corner Worksurface Frame, same as standard Worksurface Frame except designed to be used when two Structural Modules meet to form an inside corner. Frame supports Worksurface Top and can also support a Suspended Cabinet mounted 45 degrees to the module.

Worksurface Top must be ordered separately.

The Corner Worksurface Frame Filler may be used to fill the space below the Corner Worksurface Frame when a suspended base cabinet is not used. The filler is fabricated from cold rolled steel and is finished to match the frame.

Adjustable Height Cantilevered Corner Worksurface Frame

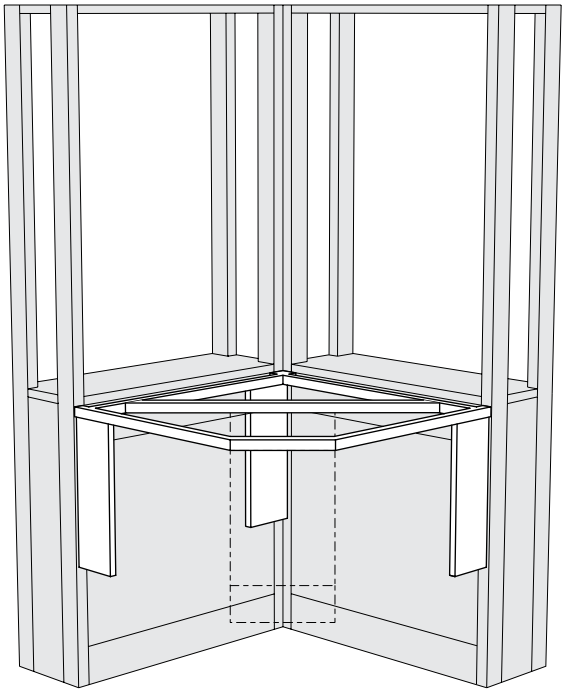

Module Length	23" Deep Frame	Maximum Cabinet Size
36"	**F81M372336N**	18" L
42"	**F81M372342N**	24" L
48"	**F81M372348N**	30" L

Module Length	29" Deep Frame	Maximum Cabinet Size
36"	**F81M372936N**	n/a
42"	**F81M372942N**	18" L
48"	**F81M372948N**	24" L

Corner Worksurface Frame Filler

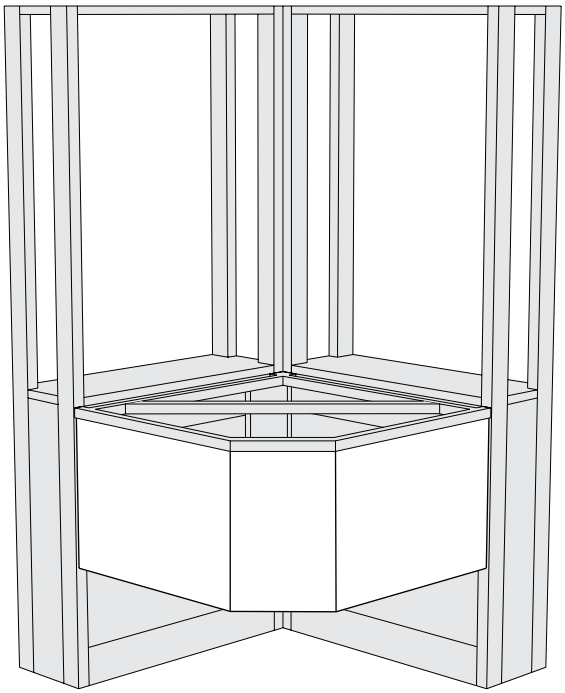

Module Length	23" Deep Frame	29" Deep Frame
36"	**F82M372336N**	**F82M372936N**
42"	**F82M372342N**	**F82M372942N**
48"	**F82M372348N**	**F82M372948N**

KEWAUNEE

Worksurface & Module Tops

Features:

- Module Ledges and Worksurface Tops available in three laboratory proven materials:
  - Kewaunee Kemresin®
  - Phenolic Resin
- Module Ledges and Worksurface Tops available in all Module and Worksurface Frame sizes.
- Modular Worksurface Tops available with 1" wide “Cord Gaps".
- Custom cutout and fixture hole arrangements available.
- Custom Worksurface Top sizes and styles available.

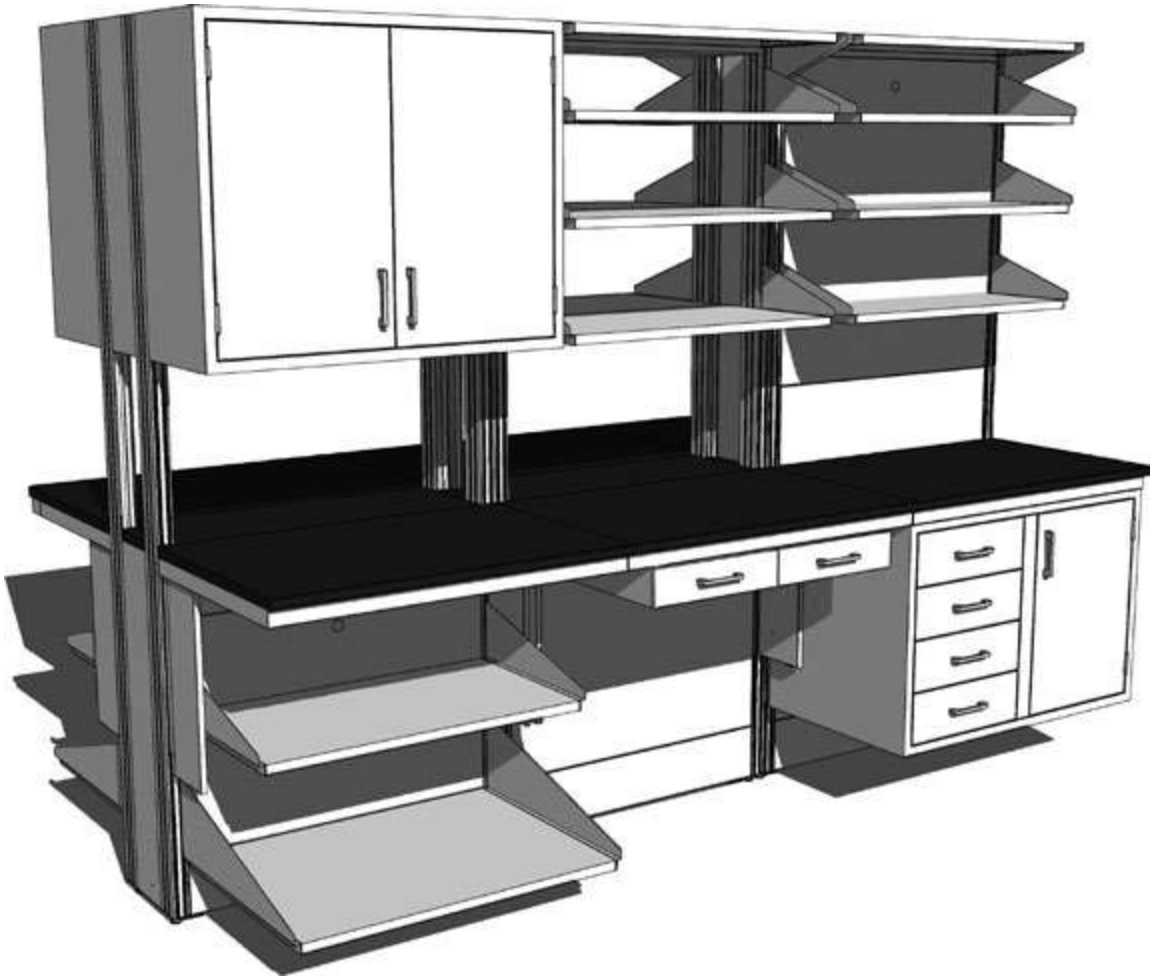

Module Ledges

Specifications:

Module Ledges are required to cover the open top of Wall and Island Structural Modules. They are 1" thick with all edges finished square and are most commonly ordered in the same material and color as the Worksurface Tops, but it is not required.

F92 Module Ledges are designed for use on Modules without Upper Carriers and match the Module length. **F90** Module Ledges are for use on Modules with Upper Carriers, and are 3¼" less in length than the Module.

3" Deep Module Ledges for 37" & 47" High Wall Modules

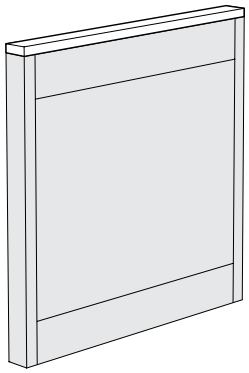

Length	Kemresin®	Phenolic Resin
24"	**F92R010324N**	**F92T010324N**
30"	**F92R010330N**	**F92T010330N**
36"	**F92R010336N**	**F92T010336N**
42"	**F92R010342N**	**F92T010342N**
48"	**F92R010348N**	**F92T010348N**
54"	**F92R010354N**	**F92T010354N**
60"	**F92R010360N**	**F92T010360N**
66"	**F92R010366N**	**F92T010366N**
72"	**F92R010372N**	**F92T010372N**

3" Deep Module Ledges for 84" High Wall Modules with Upper Carriers

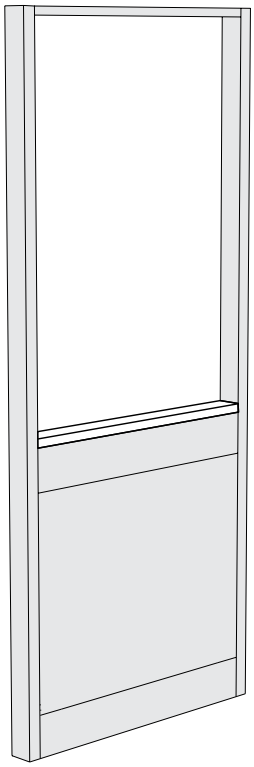

Length	Kemresin®	Phenolic Resin
24"	**F90R010324N**	**F90T010324N**
30"	**F90R010330N**	**F90T010330N**
36"	**F90R010336N**	**F90T010336N**
42"	**F90R010342N**	**F90T010342N**
48"	**F90R010348N**	**F90T010348N**
54"	**F90R010354N**	**F90T010354N**
60"	**F90R010360N**	**F90T010360N**
66"	**F90R010366N**	**F90T010366N**
72"	**F90R010372N**	**F90T010372N**

Color Option Code

Kemresin

BK = Black GR = Grey PT=Putty SL = Slate

Kemresin is available in four standard colors. To specify Kemresin color, place a dash and the two-letter code at the end of the part number.

Example: F92R010324N-BK for Black

If no color is specified, Kemresin will be furnished in Black.

Phenolic Resin

Phenolic Resin is furnished in Black standard.

KEWAUNEE

Module Ledges

Specifications:

Module Ledges are required to cover the open top of Wall and Island Structural Modules. They are 1" thick with all edges finished square and are most commonly ordered in the same material and color as the Worksurface Tops, but it is not required.

F92 Module Ledges are designed for use on Modules without Upper Carriers and match the Module length. **F90** Module Ledges are for use on Modules with Upper Carriers, and are 3¼" less in length than the Module.

9" Deep Module Ledges for 37" & 47" High Wall Modules

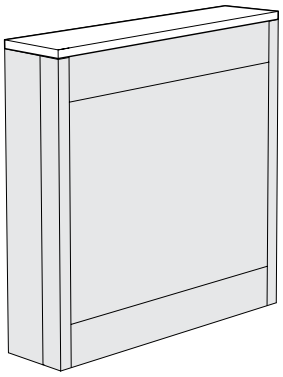

Length	Kemresin®	Phenolic Resin
24"	**F92R010924N**	**F92T010924N**
30"	**F92R010930N**	**F92T010930N**
36"	**F92R010936N**	**F92T010936N**
42"	**F92R010942N**	**F92T010942N**
48"	**F92R010948N**	**F92T010948N**
54"	**F92R010954N**	**F92T010954N**
60"	**F92R010960N**	**F92T010960N**
66"	**F92R010966N**	**F92T010966N**
72"	**F92R010972N**	**F92T010972N**

9" Deep Module Ledges for 84" High Wall Modules with Upper Carriers

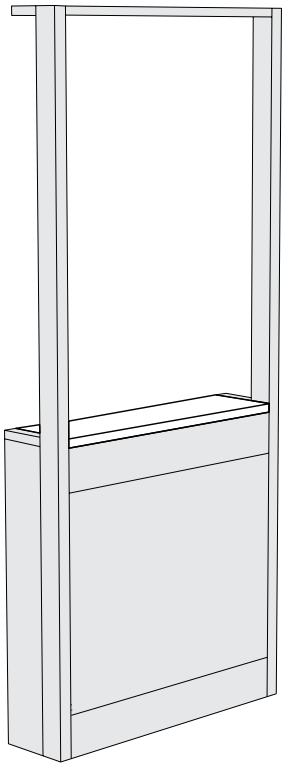

Length	Kemresin®	Phenolic Resin
24"	**F90R010924N**	**F90T010924N**
30"	**F90R010930N**	**F90T010930N**
36"	**F90R010936N**	**F90T010936N**
42"	**F90R010942N**	**F90T010942N**
48"	**F90R010948N**	**F90T010948N**
54"	**F90R010954N**	**F90T010954N**
60"	**F90R010960N**	**F90T010960N**
66"	**F90R010966N**	**F90T010966N**
72"	**F90R010972N**	**F90T010972N**

Module End Caps

Depth	Kemresin®	Phenolic Resin
6"	**F91R010206N**	**F91T010206N**

Color Option Code

Kemresin

BK = Black GR = Grey PT = Putty SL = Slate

Kemresin is available in four standard colors. To specify Kemresin color, place a dash and the two-letter code at the end of the part number.

Example: F92R010924N-BK for Black

If no color is specified, Kemresin will be furnished in Black.

Phenolic Resin

Phenolic Resin is furnished in Black standard.

Module Ledges

Specifications:

Module Ledges are required to cover the open top of Wall and Island Structural Modules. They are 1" thick with all edges finished square and are most commonly ordered in the same material and color as the Worksurface Tops, but it is not required.

F92 Module Ledges are designed for use on Modules without Upper Carriers and match the Module length. **F90** Module Ledges are for use on Modules with Upper Carriers, and are 3¼" less in length than the Module.

12" Deep Module Ledges for 37" & 47" High Island Modules

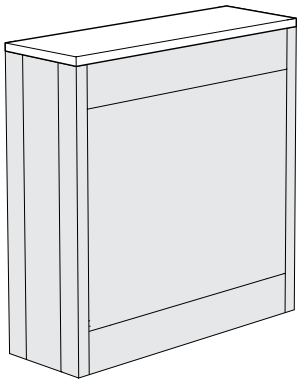

Length	Kemresin®	Phenolic Resin
24"	**F92R011224N**	**F92T011224N**
30"	**F92R011230N**	**F92T011230N**
36"	**F92R011236N**	**F92T011236N**
42"	**F92R011242N**	**F92T011242N**
48"	**F92R011248N**	**F92T011248N**
54"	**F92R011254N**	**F92T011254N**
60"	**F92R011260N**	**F92T011260N**
66"	**F92R011266N**	**F92T011266N**
72"	**F92R011272N**	**F92T011272N**

12" Deep Module Ledges for 84" High Island Modules with Upper Carriers

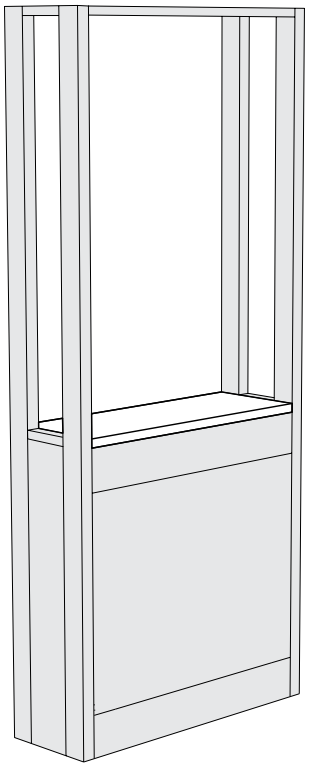

Length	Kemresin®	Phenolic Resin
24"	**F90R011224N**	**F90T011224N**
30"	**F90R011230N**	**F90T011230N**
36"	**F90R011236N**	**F90T011236N**
42"	**F90R011242N**	**F90T011242N**
48"	**F90R011248N**	**F90T011248N**
54"	**F90R011254N**	**F90T011254N**
60"	**F90R011260N**	**F90T011260N**
66"	**F90R011266N**	**F90T011266N**
72"	**F90R011272N**	**F90T011272N**

Module End Caps

Depth	Kemresin®	Phenolic Resin
6"	**F91R010206N**	**F91T010206N**

Color Option Code

Kemresin

BK = Black GR = Grey PT=Putty SL = Slate

Kemresin is available in four standard colors. To specify Kemresin color, place a dash and the two-letter code at the end of the part number.

Example: F92R011224N-BK for Black

If no color is specified, Kemresin will be furnished in Black.

Phenolic Resin

Phenolic Resin is furnished in Black standard.

KEWAUNEE

Module Ledges

Specifications:

Module Ledges are required to cover the open top of Wall and Island Structural Modules. They are most commonly ordered in the same material and color as the Worksurface Tops, but it is not required.

Module Ledges are 1" thick with all edges finished square. They should be ordered to match the module size on which they are to be used. The actual ledge is 3¼" less in length than the module. The remaining space is covered by the Module End Caps and/or Upper Carrier Uprights which are supplied with the Structural Module.

Additional Module End Caps may be purchased for future reconfiguring, but they are not required.

6" Deep Module Ledge for 37" & 47" High Partition Modules

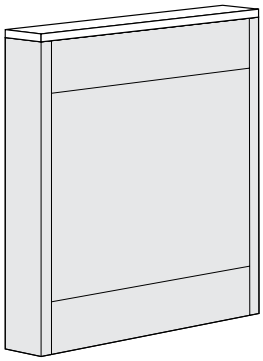

Length	Kemresin®	Phenolic Resin
24"	**F92R010624N**	**F92T010624N**
30"	**F92R010630N**	**F92T010630N**
36"	**F92R010636N**	**F92T010636N**
42"	**F92R010642N**	**F92T010642N**
48"	**F92R010648N**	**F92T010648N**
54"	**F92R010654N**	**F92T010654N**
60"	**F92R010660N**	**F92T010660N**
66"	**F92R010666N**	**F92T010666N**
72"	**F92R010672N**	**F92T010672N**

6" Deep Module Ledge for 84" High Partition Modules with Upper Carriers

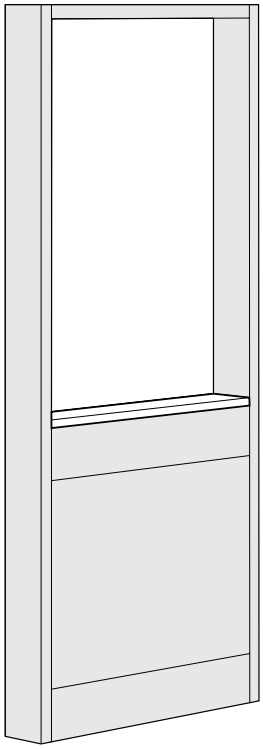

Length	Kemresin®	Phenolic Resin
24"	**F90R010624N**	**F90T010624N**
30"	**F90R010630N**	**F90T010630N**
36"	**F90R010636N**	**F90T010636N**
42"	**F90R010642N**	**F90T010642N**
48"	**F90R010648N**	**F90T010648N**
54"	**F90R010654N**	**F90T010654N**
60"	**F90R010660N**	**F90T010660N**
66"	**F90R010666N**	**F90T010666N**
72"	**F90R010672N**	**F90T010672N**

Corner & Peninsula Column Module Ledges

Length	Kemresin®	Phenolic Resin
6"x6"	**F90R010606N**	**F90T010606N**
9"x9"	**F90R010909N**	**F90T010909N**
9"x12"	**F90R010912N**	**F90T010912N**
12"x12"	**F90R011212N**	**F90T011212N**

Color Option Code

Kemresin

BK = Black GR = Grey PT=Putty SL = Slate

Kemresin is available in four standard colors. To specify Kemresin color, place a dash and the two-letter code at the end of the part number.

Example: F92R010624N-BK for Black

If no color is specified, Kemresin will be furnished in Black.

Phenolic Resin

Phenolic Resin is furnished in Black standard.

Worksurface Tops

Specifications:

Worksurface Tops are available in modular sizes to match the length and depth of the Worksurface Frames. They are also available in depths 1" less than the Worksurface Frames to create a "Cord Gap" behind the top. This gap allows cords, cables and flexible tubing to be routed below the Worksurface, and out of the way of ongoing work.

Worksurface Tops are 1" thick. Front edges are treated as shown on page 70. All other edges are finished square.

When Worksurface Tops spanning more than one frame are desired or when cutouts are required, custom tops are available. See page 71 and 72 for more information.

Modular Worksurface Tops

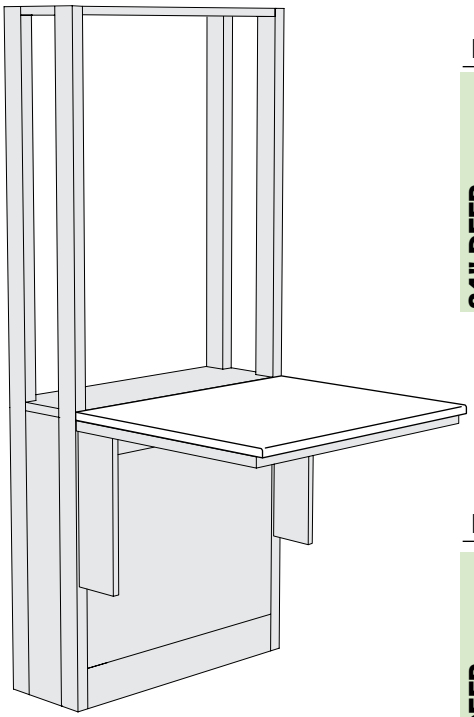

24" DEEP

Length	Kemresin®	Phenolic Resin
24"	**F95R012424N**	**F95T012424N**
30"	**F95R012430N**	**F95T012430N**
36"	**F95R012436N**	**F95T012436N**
42"	**F95R012442N**	**F95T012442N**
48"	**F95R012448N**	**F95T012448N**
54"	**F95R012454N**	**F95T012454N**
60"	**F95R012460N**	**F95T012460N**
66"	**F95R012466N**	**F95T012466N**
72"	**F95R012472N**	**F95T012472N**

30" DEEP

Length	Kemresin®	Phenolic Resin
24"	**F95R013024N**	**F95T013024N**
30"	**F95R013030N**	**F95T013030N**
36"	**F95R013036N**	**F95T013036N**
42"	**F95R013042N**	**F95T013042N**
48"	**F95R013048N**	**F95T013048N**
54"	**F95R013054N**	**F95T013054N**
60"	**F95R013060N**	**F95T013060N**
66"	**F95R013066N**	**F95T013066N**
72"	**F95R013072N**	**F95T013072N**

Color Option Code

Kemresin

BK = Black GR = Grey PT=Putty SL = Slate

Kemresin is available in four standard colors. To specify Kemresin color, place a dash and the two-letter code at the end of the part number.

Example: F95R012424N-BK for Black

If no color is specified, Kemresin will be furnished in Black.

Phenolic Resin

Phenolic Resin is furnished in Black standard.

KEWAUNEE

Worksurface Tops

Specifications:

Worksurface Tops are available in modular sizes to match the length and depth of the Worksurface Frames. They are also available in depths 1" less than the Worksurface Frames to create a "Cord Gap" behind the top. This gap allows cords, cables and flexible tubing to be routed below the Worksurface, and out of the way of ongoing work.

Worksurface Tops are 1" thick. Front edges are treated as shown on page 70. All other edges are finished square.

When Worksurface Tops spanning more than one frame are desired or when cutouts are required, custom tops are available. See page 71 and 72 for more information.

Modular Worksurface Tops with Cord Gap

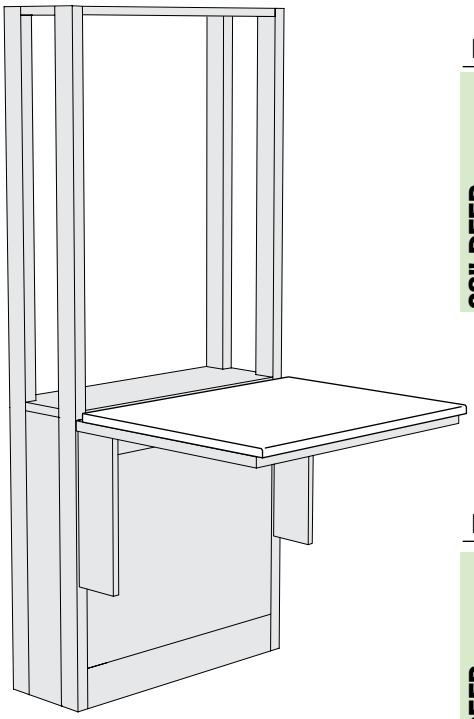

	Length	Kemresin®	Phenolic Resin
23" DEEP	24"	**F95R012324N**	**F95T012324N**
	30"	**F95R012330N**	**F95T012330N**
	36"	**F95R012336N**	**F95T012336N**
	42"	**F95R012342N**	**F95T012342N**
	48"	**F95R012348N**	**F95T012348N**
	54"	**F95R012354N**	**F95T012354N**
	60"	**F95R012360N**	**F95T012360N**
	66"	**F95R012366N**	**F95T012366N**
	72"	**F95R012372N**	**F95T012372N**

	Length	Kemresin®	Phenolic Resin
29" DEEP	24"	**F95R012924N**	**F95T012924N**
	30"	**F95R012930N**	**F95T012930N**
	36"	**F95R012936N**	**F95T012936N**
	42"	**F95R012942N**	**F95T012942N**
	48"	**F95R012948N**	**F95T012948N**
	54"	**F95R012954N**	**F95T012954N**
	60"	**F95R012960N**	**F95T012960N**
	66"	**F95R012966N**	**F95T012966N**
	72"	**F95R012972N**	**F95T012972N**

Color Option Code

Kemresin

BK = Black GR = Grey PT=Putty SL = Slate

Kemresin is available in four standard colors. To specify Kemresin color, place a dash and the two-letter code at the end of the part number.

Example: F95R012324N-BK for Black

If no color is specified, Kemresin will be furnished in Black.

Phenolic Resin

Phenolic Resin is furnished in Black standard.

Corner Worksurface Tops

Specifications:

Worksurface Tops are available in modular sizes to match the length and depth of the Worksurface Frames. They are also available in depths 1" less than the Worksurface Frames to create a "Cord Gap" behind the top. This gap allows cords, cables and flexible tubing to be routed below the Worksurface, and out of the way of ongoing work.

Worksurface Tops are 1" thick. Front edges are treated as shown on page 70 All other edges are finished square.

When Worksurface Tops spanning more than one frame are desired or when cutouts are required, custom tops are available. See page 71 and 72 for more information.

Modular Corner Worksurface Tops

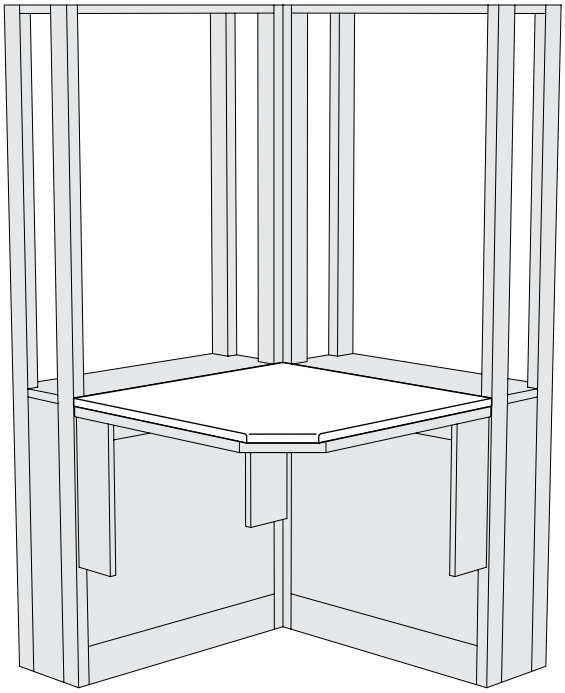

Depth	Length	Kemresin®	Phenolic Resin
23"	36"	**F96R012336N**	**F96T012336N**
23"	42"	**F96R012342N**	**F96T012342N**
23"	48"	**F96R012348N**	**F96T012348N**
24"	36"	**F96R012436N**	**F96T012436N**
24"	42"	**F96R012442N**	**F96T012442N**
24"	48"	**F96R012448N**	**F96T012448N**
29"	36"	**F96R012936N**	**F96T012936N**
29"	42"	**F96R012942N**	**F96T012942N**
29"	48"	**F96R012948N**	**F96T012948N**
30"	36"	**F96R013036N**	**F96T013036N**
30"	42"	**F96R013042N**	**F96T013042N**
30"	48"	**F96R013048N**	**F96T013048N**

Color Option Code

Kemresin

BK = Black GR = Grey PT=Putty SL = Slate

Kemresin is available in four standard colors. To specify Kemresin color, place a dash and the two-letter code at the end of the part number.

Example: F96R012336N-BK for Black

If no color is specified, Kemresin will be furnished in Black.

Phenolic Resin

Phenolic Resin is furnished in Black standard.

Worktop and Ledge Materials

Specifications:

Worksurface Top and Ledge material selections are among the most critical of the laboratory furniture decisions. The intended applications of your worktops dictate material choice. Surfaces could be exposed to reagents and caustic substances. Heavy equipment may need to be supported or only light duty tasks may be performed.

Kewaunee offers three basic worktop materials for use on the Alpha System. They are Kewaunee's exclusive Kemresin® and Phenolic Resin. All are available in standard sizes to match the Alpha System modules and are complimented with appropriate sinks, drains and accessories.

Worktop and Ledge Material Comparison

MATERIAL	APPEARANCE	COMPOSITION	CHEMICAL RESISTANCE	APPLICATIONS
KEMRESIN®	Black, Grey, Putty, or Slate, ultra-smooth, non-porous	1" thick molded epoxy resin	Excellent resistance to practically all acids, alkalies and solvents	Use wherever optimum physical and chemical resisting properties are required
PHENOLIC RESIN	Hard, smooth surface, various colors	Cellulose fiber reinforced phenolic resin core with a highly crosslinked polyurethane copolymer surface	Excellent resistance to practically all acids, alkalies and solvents	Chemical and biological labs

Worktop Styles — Front Edge

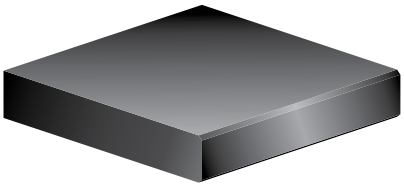

Kewaunee KEMRESIN®

⅛" Chamfer

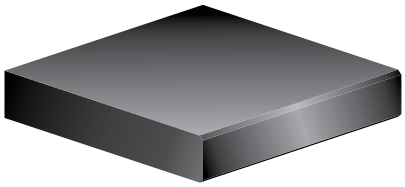

Phenolic Resin

⅛" Chamfer

Color Selection:

Kewaunee KEMRESIN®

Black
Grey
Putty
Slate

PHENOLIC RESIN

Phenolic Resin is furnished Black as standard. Other colors and patterns are available on special order. Contact your Kewaunee representative for current offerings.

Custom Worksurface Tops and Ledges

Specifications:

Recognizing that requirements for laboratory service fixtures and fittings is highly individualized, and that no one solution works in all cases, Alpha System Ledges and Worksurface Tops may be modified to accommodate fixture, fitting, sink, drain, and accessory cutouts as required.

Kewaunee's nationwide network of sales representatives and designers are available to help.

Worksurface Tops and Ledges with Holes and Cutouts

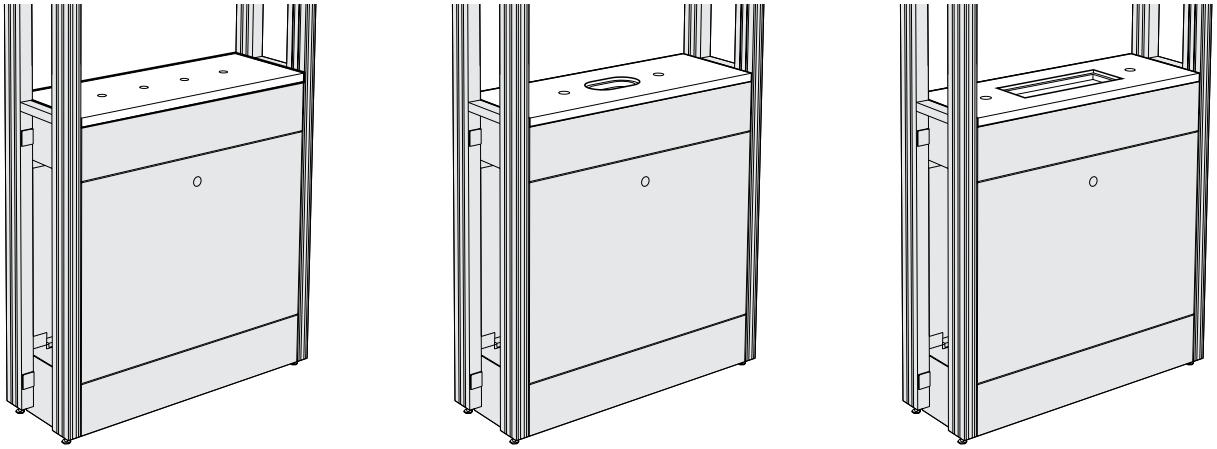

Module ledges may be ordered with cupsink cutouts and/or holes for mounting fittings and fixtures.

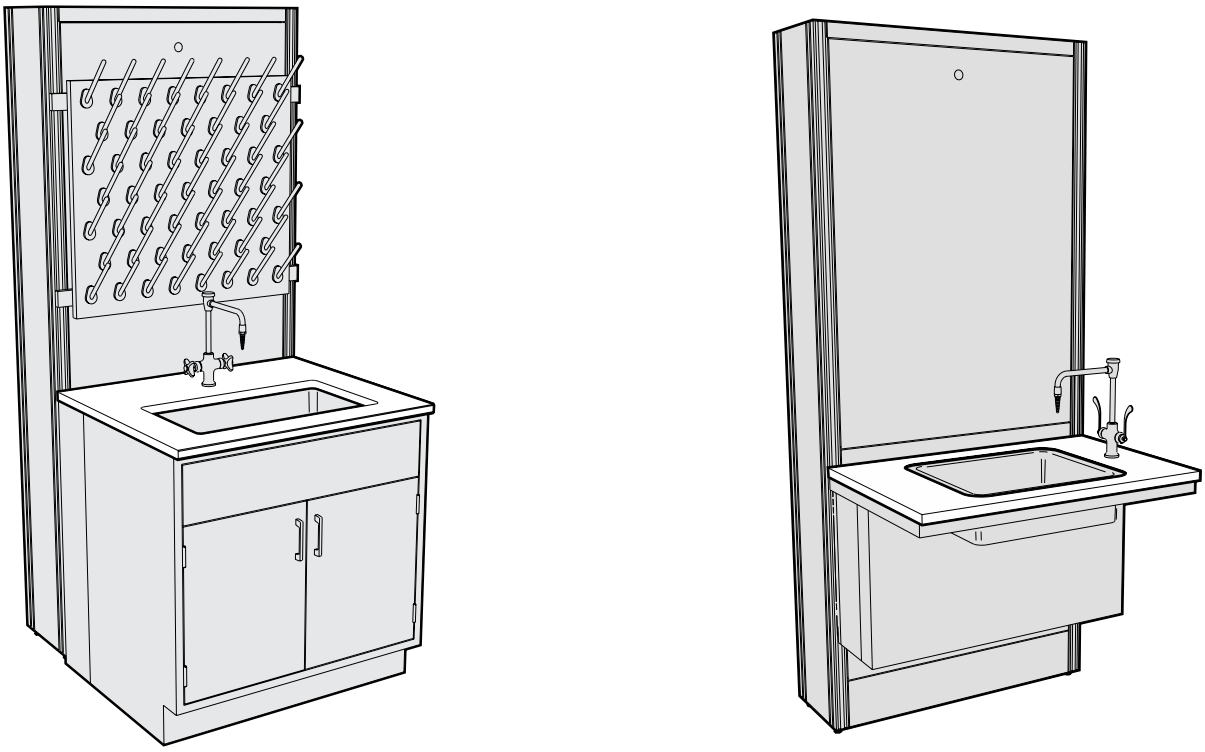

Worksurface tops may be ordered with sink cutouts, service fitting holes, specialty cutouts or other modifications.

Custom Worktops

Specifications:

Continuous Worksurface tops are available in two basic styles for applications that require an uninterrupted surface. All three top materials, Kemresin and Phenolic Resin, may be fabricated into both flat tops, or flat tops with 1" thick applied curbs at the rear.

Fitting and fixture holes and cutouts can be incorporated in these styles to allow unlimited design options.

See charts below for material size and color options.

1" Thick Flat Worksurface Top

Standard Depths **24"** **30"**

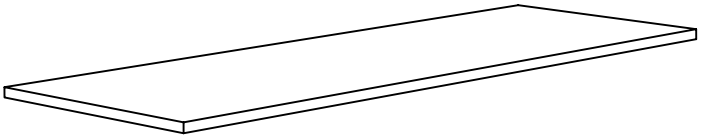

Available Materials	Maximum Length without Joint
Kewaunee Kemresin®	**96"**
Phenolic Resin	**120"**

1" Thick Worksurface Top with 1" x 4" Applied Curb

Standard Depths **24"** **30"**

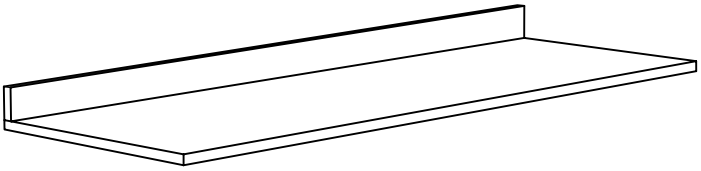

Available Materials	Maximum Length without Joint
Kewaunee Kemresin®	**96"**
Phenolic Resin	**120"**

Color Selection:

Kewaunee KEMRESIN®

Black
Grey
Putty
Slate

PHENOLIC RESIN

Phenolic Resin is furnished Black as standard. Other colors and patterns are available on special order. Contact your Kewaunee representative for current offerings.

Alpha System Carts

Features:

- The adaptability of the Alpha System and the convenience of mobility
- Standard double-slotted uprights mounted on heavy gauge steel frame
- Available with large diameter, heavy duty casters or glides
- Available with or without overhead carrier
- Available in all standard module lengths – from 24" to 72"
- Accepts standard Alpha System components including:
  - Adjustable Height Cantilevered Worksurface Frames
    - for supporting Worksurface Top and Suspended Base Cabinets
    - easily positioned on 1" increments
  - Adjustable Module Shelving
    - available in five depths
    - available in steel, wood, and phenolic resin
    - available with or without retaining lips
    - adjustable on 1" increments

SEFA 10 | Class 8 – Configuration 1 – Category 1

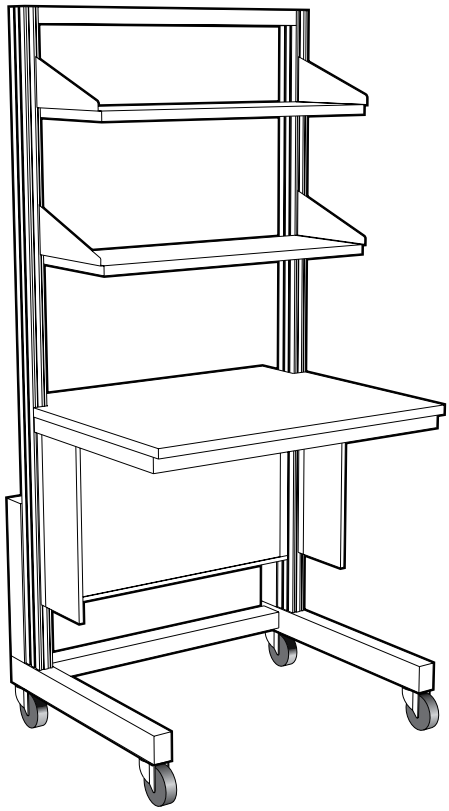

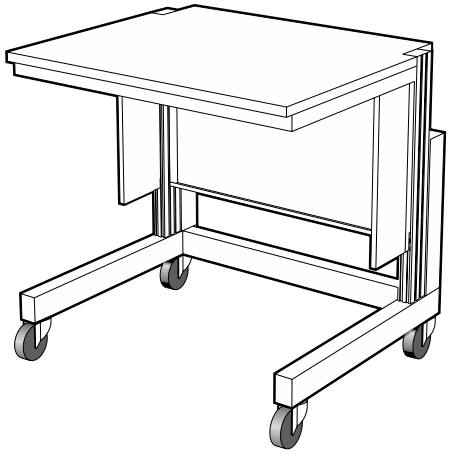

See Table of Contents pages 5 and 6 for catalog sections relating to Alpha System Cart frame components, Worksurface Tops, and Adjustable Module Shelves.

KEWAUNEE

Alpha System Carts

Specifications:

Alpha System Carts incorporate the same double slotted uprights used in the Alpha System Structural Modules. The uprights are mounted to a base fabricated of steel tubing and mounted on 4" diameter casters or glides. This creates a mobile system designed to support both the same Cantilevered Worksurface Frames and Adjustable Shelves used on the Structural Support Modules.

The Alpha System Cart is 37" high, with Upper Carrier 78" high. Both are 30" deep and available in lengths shown.

Worksurface Frame, Top and Adjustable Shelves must be ordered separately.

Alpha System Cart

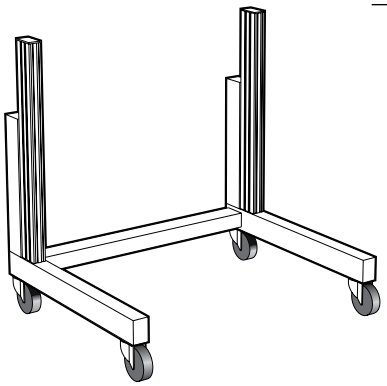

Length	with Caster	with Glides
24"	**F57C372924C**	**F57C372924G**
30"	**F57C372930C**	**F57C372930G**
36"	**F57C372936C**	**F57C372936G**
42"	**F57C372942C**	**F57C372942G**
48"	**F57C372948C**	**F57C372948G**
54"	**F57C372954C**	**F57C372954G**
60"	**F57C372960C**	**F57C372960G**
66"	**F57C372966C**	**F57C372966G**
72"	**F57C372972C**	**F57C372972G**

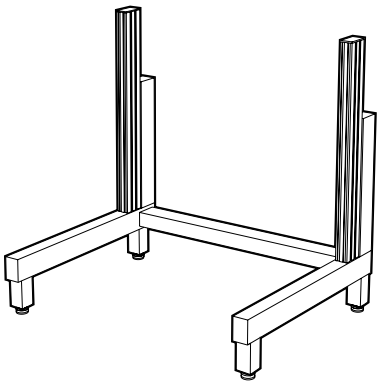

Alpha System Cart with Upper Carrier

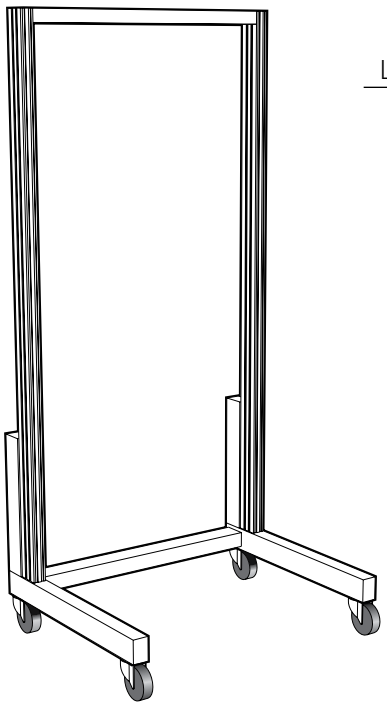

Length	with Casters	with Glides
24"	**F57C782924C**	**F57C782924G**
30"	**F57C782930C**	**F57C782930G**
36"	**F57C782936C**	**F57C782936G**
42"	**F57C782942C**	**F57C782942G**
48"	**F57C782948C**	**F57C782948G**
54"	**F57C782954C**	**F57C782954G**
60"	**F57C782960C**	**F57C782960G**
66"	**F57C782966C**	**F57C782966G**
72"	**F57C782972C**	**F57C782972G**

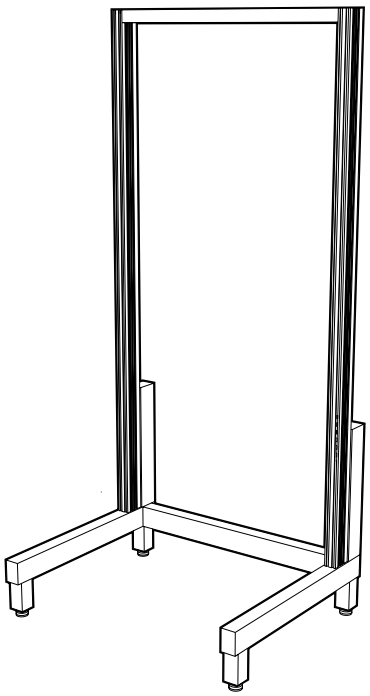

Alpha System Carts

Specifications:

Alpha System Cart Worksurface Tops are available in modular sizes to match the length and depth of the Worksurface Frames. Worksurface Tops are 1" thick. Front edges are treated as shown on page 70. All other edges are finished square.

Electrical Service Strip & Modesty Panel for Alpha System Cart

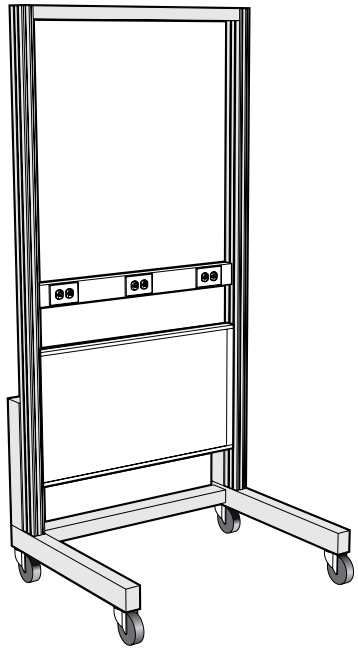

Length	Electrical Service Strip	Duplex Oulets
24"	**F56M030224N**	2
30"	**F56M030230N**	2
36"	**F56M030236N**	3
42"	**F56M030242N**	3
48"	**F56M030248N**	3
54"	**F56M030254N**	3
60"	**F56M030260N**	3
66"	**F56M030266N**	3
72"	**F56M030272N**	3

Length	Modesty Panel
24"	**F57M190124N**
30"	**F57M190130N**
36"	**F57M190136N**
42"	**F57M190142N**
48"	**F57M190148N**
54"	**F57M190154N**
60"	**F57M190160N**
66"	**F57M190166N**
72"	**F57M190172N**

Alpha System Cart Worksurface

See Table of Contents for Worksurface Frames section.

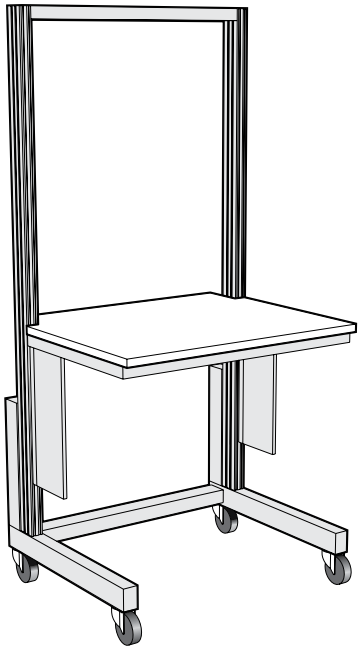

	Length	Kemresin®	Phenolic Resin
24" TOP for 23" deep frames	24"	**F58R013024N**	**F58T013024N**
	30"	**F58R013030N**	**F58T013030N**
	36"	**F58R013036N**	**F58T013036N**
	42"	**F58R013042N**	**F58T013042N**
	48"	**F58R013048N**	**F58T013048N**
	54"	**F58R013054N**	**F58T013054N**
	60"	**F58R013060N**	**F58T013060N**
	66"	**F58R013066N**	**F58T013066N**
	72"	**F58R013072N**	**F58T013072N**

	Length	Kemresin®	Phenolic Resin
30" TOP for 29" deep frames	24"	**F58R013624N**	**F58T013624N**
	30"	**F58R013630N**	**F58T013630N**
	36"	**F58R013636N**	**F58T013636N**
	42"	**F58R013642N**	**F58T013642N**
	48"	**F58R013648N**	**F58T013648N**
	54"	**F58R013654N**	**F58T013654N**
	60"	**F58R013660N**	**F58T013660N**
	66"	**F58R013666N**	**F58T013666N**
	72"	**F58R013672N**	**F58T013672N**

See Table of Contents for Worksurface Frames section.

KEWAUNEE

Heavy Duty Alpha System Cart

Heavy Duty Alpha System Cart Assembly

SEFA 10 | Class 8 – Configuration 1 – Category 4

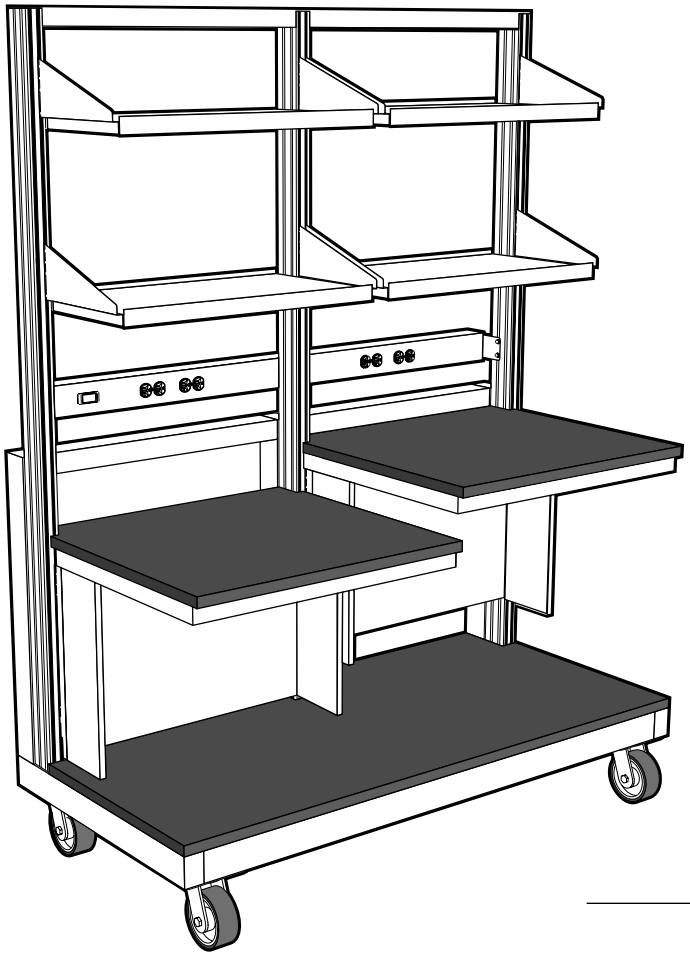

Features:

- 3000 pound load capacity
- Two adjustable height, half-length, Kemresin Worktops with locking frames
- Worktops individually adjustable on 1" centers from 33" to 40"
- Four 15" deep, half-length, adjustable height, steel locking shelves with retaining lips on front and rear
- Shelves adjustable on 1" centers
- One 24" deep fixed, Kemresin shelf at base of bench
- One switched, adjustable height, power strip with four duplex recepticles and 10 foot pigtail
- Four heavy duty casters, with locking brakes on front casters
- Overall dimensions: 30" deep x 79½" high

Heavy Duty Alpha System Cart Assembly

Length	
48"	**F98M792448C**
60"	**F98M792460C**
72"	**F98M792472C**

Worksurface Color Option Code

Kemresin

BK = Black GR = Grey PT=Putty SL = Slate

Kemresin is available in four standard colors. To specify Kemresin color, place a dash and the two-letter code at the end of the part number.

Example: F98M792448C-BK for Black

If no color is specified, Kemresin will be furnished in Black.

Free-Standing Adjustable Height Table

Specifications:

Free-Standing Adjustable Height Tables are available for either 24" deep or 30" deep Worksurface tops in lengths as shown. Telescoping tubular steel legs allow the table to be height adjustable from 30" to 37" high on one inch increments. The table is furnished with a cold rolled steel frame and four adjustable legs with glides. Adjustable Height Tables will accommodate Suspended Cabinets.

Worksurface Top must be ordered separately.

Worksurface Tops are 1" thick. Front and side edges are treated as shown on page 70. Rear edge is finished square.

Free-Standing Adjustable Height Table Frame

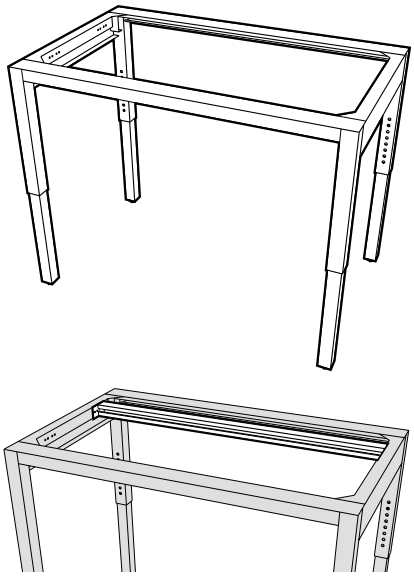

22" Deep Table Frame

Length	Part Number
34"	**FC50M362234N**
40"	**FC50M362240N**
46"	**FC50M362246N**
52"	**FC50M362252N**
58"	**FC50M362258N**
64"	**FC50M362264N**
70"	**FC50M362270N**

28" Deep Table Frame

Length	Part Number
34"	**FC50M362834N**
40"	**FC50M362840N**
46"	**FC50M362846N**
52"	**FC50M362852N**
58"	**FC50M362858N**
64"	**FC50M362864N**
70"	**FC50M362870N**

Optional Rear Hanging Rail

Length	Part Number
34"	**FC89M020234N**
40"	**FC89M020240N**
46"	**FC89M020246N**
52"	**FC89M020252N**
58"	**FC89M020258N**
64"	**FC89M020264N**
70"	**FC89M020270N**

Required for 28" deep Table Frames only when mounting suspended cabinets.

Free-Standing Adjustable Height Table Top

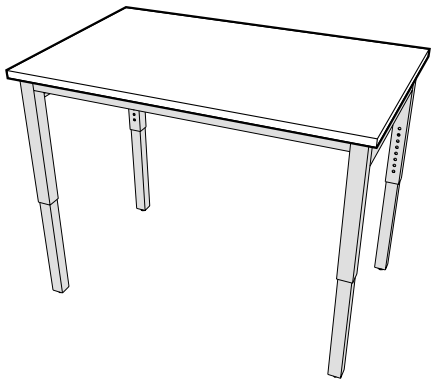

24" Deep Worksurface Top

Length	Kemresin®	Phenolic Resin
36"	**FC96R012436N**	**FC96T012436N**
42"	**FC96R012442N**	**FC96T012442N**
48"	**FC96R012448N**	**FC96T012448N**
54"	**FC96R012454N**	**FC96T012454N**
60"	**FC96R012460N**	**FC96T012460N**
66"	**FC96R012466N**	**FC96T012466N**
72"	**FC96R012472N**	**FC96T012472N**

30" Deep Worksurface Top

Length	Kemresin®	Phenolic Resin
36"	**FC96R013036N**	**FC96T013036N**
42"	**FC96R013042N**	**FC96T013042N**
48"	**FC96R013048N**	**FC96T013048N**
54"	**FC96R013054N**	**FC96T013054N**
60"	**FC96R013060N**	**FC96T013060N**
66"	**FC96R013066N**	**FC96T013066N**
72"	**FC96R013072N**	**FC96T013072N**

KEWAUNEE

Alpha Columns

Features:

- Moveable, freestanding bench design integrates with other Alpha products.
- 6" wide support column utilizes Alpha's unique double slotted design.
- Can create individual self-supported workstations, or be designed with a shared structural "column" for multiple workstation applications.
- Is available both double and single-sided for use as either center island or wall benches.
- Available with either 27" or 30" deep Worksurfaces.
- Designed to integrate with mobile or floor mounted cabinetry.
- Worksurfaces and shelving are adjustable in height on 1" increments.
- Integrated shelving system with shelves available in depths from 6" to 24".
- Columns can be pre-plumbed or pre-wired for both power and data for use with overhead service carriers or panels.

SEFA 10 | Class 7 – Configuration 4 – Category 3

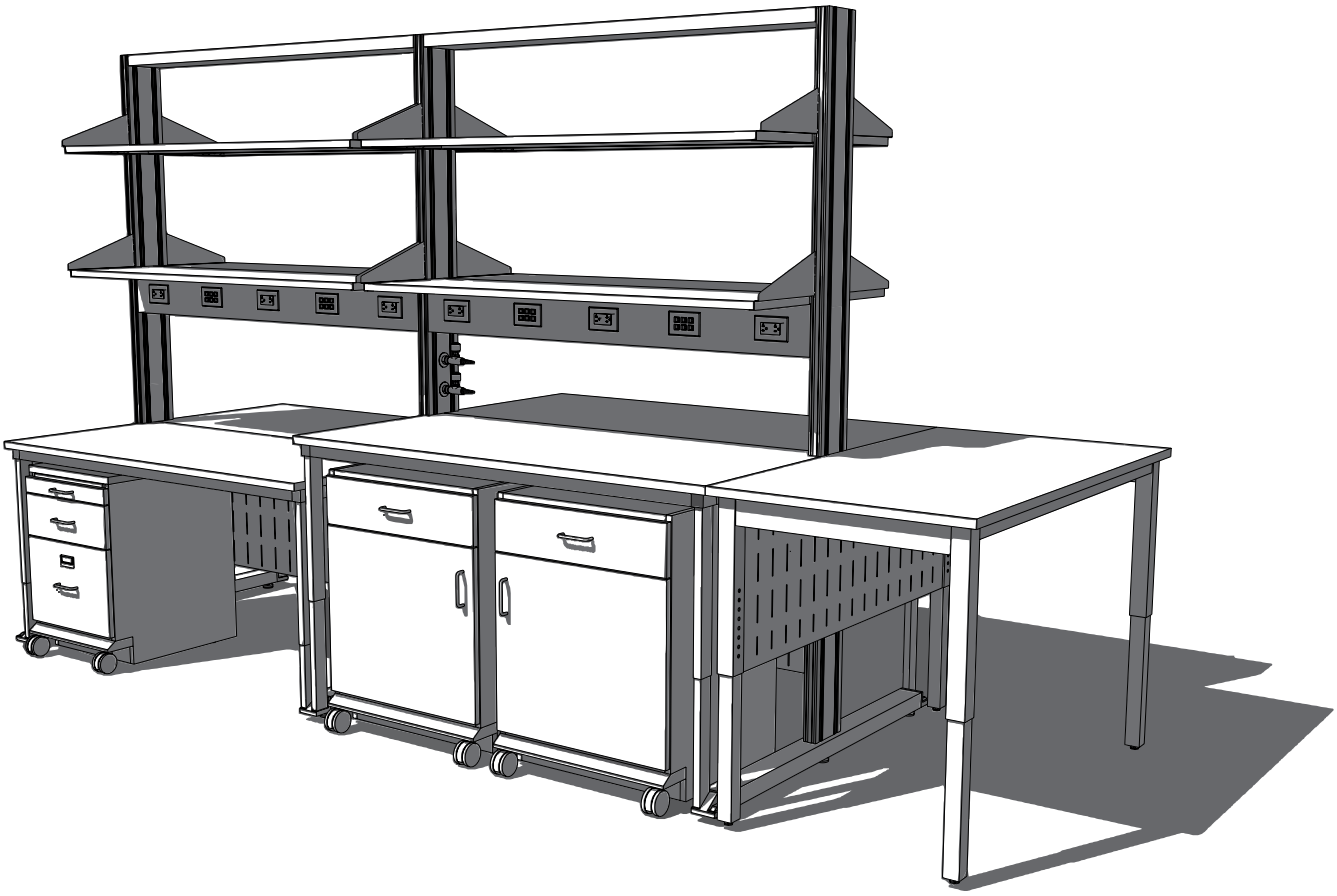

Alpha Column Double-Sided Modules

Specifications:

Double-Sided Starter Modules may be used as stand-alone workstations, or as the first module in a multi-module assembly. The six-inch column is 84" high and slotted on 1" centers to accept the Worksurface Frame or Shelving. Each Starter Module contains two column end posts, two modesty panels, and a top rail. Modules may be ordered either with or without Worksurface Frames.

Modules are available in lengths from 36" to 72" in 6" increments. Lengths are based on distance from the center of the first post to the center of the second post. Actual module length is 1⅝" longer than cataloged length.

Worksurface Tops, Shelves, and Service Fittings must be ordered separately.

Double-Sided Starter Module with Worksurface Frames

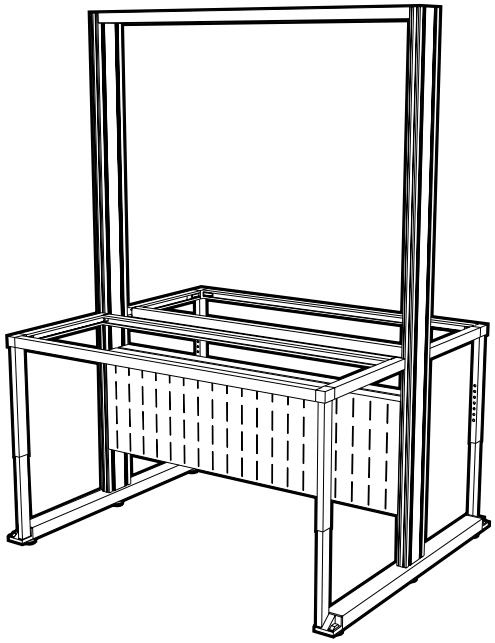

Module Length	Actual Length	for 23" Deep Frames	for 26" Deep Frames
36"	37⅝"	**FC30M845436N**	**FC30M846036N**
42"	43⅝"	**FC30M845442N**	**FC30M846042N**
48"	49⅝"	**FC30M845448N**	**FC30M846048N**
54"	55⅝"	**FC30M845454N**	**FC30M846054N**
60"	61⅝"	**FC30M845460N**	**FC30M846060N**
66"	67⅝"	**FC30M845466N**	**FC30M846066N**
72"	73⅝"	**FC30M845472N**	**FC30M846072N**

Double-Sided Starter Module without Worksurface Frames

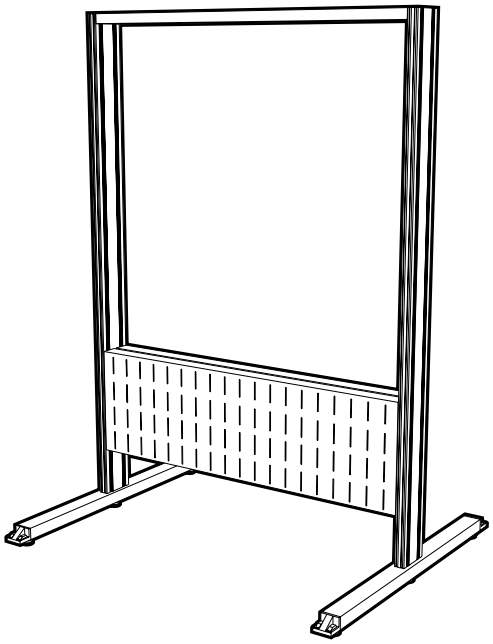

Module Length	Actual Length	for 23" Deep Frames	for 26" Deep Frames
36"	37⅝"	**FC31M845436N**	**FC31M846036N**
42"	43⅝"	**FC31M845442N**	**FC31M846042N**
48"	49⅝"	**FC31M845448N**	**FC31M846048N**
54"	55⅝"	**FC31M845454N**	**FC31M846054N**
60"	61⅝"	**FC31M845460N**	**FC31M846060N**
66"	67⅝"	**FC31M845466N**	**FC31M846066N**
72"	73⅝"	**FC31M845472N**	**FC31M846072N**

KEWAUNEE

Alpha Column Double-Sided Modules

Specifications:

Double-Sided Add-On Modules are designed to be used in addition to a Starter Module to make multi-module assemblies. The six-inch column is 84" high and slotted on 1" centers to accept the Worksurface Frame or Shelving. Each Starter Module contains one column end post, two modesty panels, and a top rail. Modules may be ordered either with or without Worksurface Frames.

Modules are available in lengths from 36" to 72" in 6" increments. Lengths are based on distance from the center of the first post to the center of the second post. Actual module length is 1⅝" longer than cataloged length.

Worksurface Tops, Shelves, and Service Fittings must be ordered separately.

Double-Sided Add-On Module with Worksurface Frames

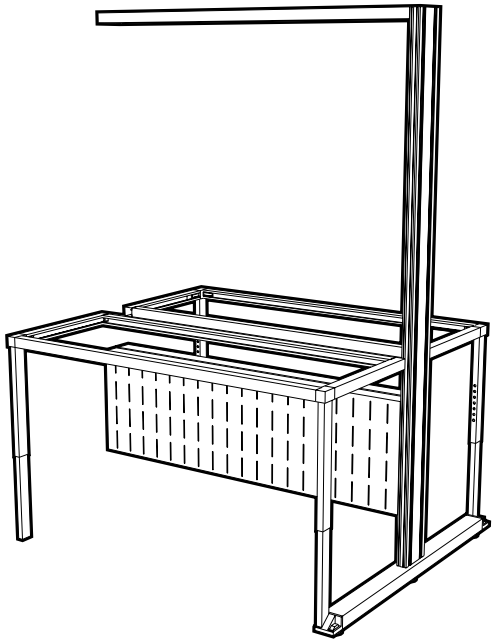

Module Length	for 23" Deep Frames	for 26" Deep Frames
36"	**FC35M845436N**	**FC35M846036N**
42"	**FC35M845442N**	**FC35M846042N**
48"	**FC35M845448N**	**FC35M846048N**
54"	**FC35M845454N**	**FC35M846054N**
60"	**FC35M845460N**	**FC35M846060N**
66"	**FC35M845466N**	**FC35M846066N**
72"	**FC35M845472N**	**FC35M846072N**

Double-Sided Add-On Module without Worksurface Frames

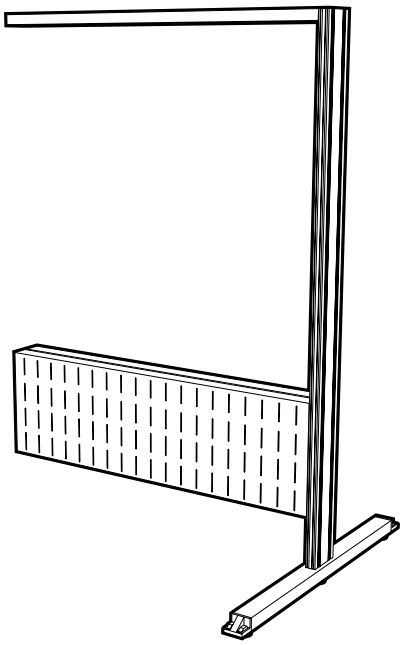

Module Length	for 23" Deep Frames	for 26" Deep Frames
36"	**FC36M845436N**	**FC36M846036N**
42"	**FC36M845442N**	**FC36M846042N**
48"	**FC36M845448N**	**FC36M846048N**
54"	**FC36M845454N**	**FC36M846054N**
60"	**FC36M845460N**	**FC36M846060N**
66"	**FC36M845466N**	**FC36M846066N**
72"	**FC36M845472N**	**FC36M846072N**

Alpha Column Single-Sided Modules

Specifications:

Single-Sided Starter Modules may be used as stand-alone workstations, or as the first module in a multi-module assembly. The six-inch column is 84" high and slotted on 1" centers to accept the Worksurface Frame or Shelving. Each Starter Module contains two column end posts, two modesty panels, and a top rail. Modules may be ordered either with or without Worksurface Frames.

Modules are available in lengths from 36" to 72" in 6" increments. Lengths are based on distance from the center of the first post to the center of the second post. Actual module length is 1⅝" longer than cataloged length.

Worksurface Tops, Shelves, and Service Fittings must be ordered separately.

Single-Sided Starter Module with Worksurface Frames

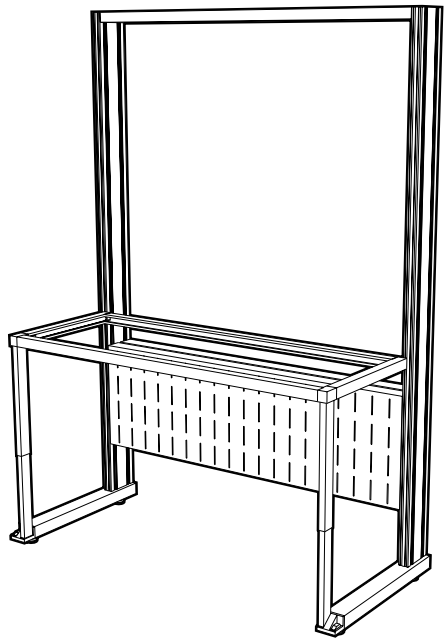

Module Length	Actual Length	for 23" Deep Frames	for 26" Deep Frames
36"	37⅝"	**FC30M843036N**	**FC30M843336N**
42"	43⅝"	**FC30M843042N**	**FC30M843342N**
48"	49⅝"	**FC30M843048N**	**FC30M843348N**
54"	55⅝"	**FC30M843054N**	**FC30M843354N**
60"	61⅝"	**FC30M843060N**	**FC30M843360N**
66"	67⅝"	**FC30M843066N**	**FC30M843366N**
72"	73⅝"	**FC30M843072N**	**FC30M843372N**

Single-Sided Starter Module without Worksurface Frames

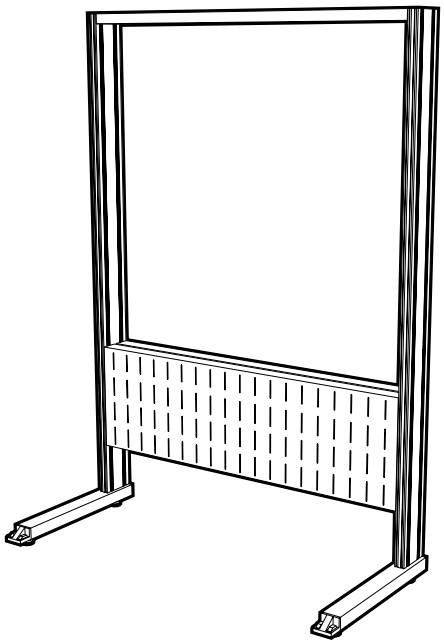

Module Length	Actual Length	for 23" Deep Frames	for 26" Deep Frames
36"	37⅝"	**FC31M843036N**	**FC31M843336N**
42"	43⅝"	**FC31M843042N**	**FC31M843342N**
48"	49⅝"	**FC31M843048N**	**FC31M843348N**
54"	55⅝"	**FC31M843054N**	**FC31M843354N**
60"	61⅝"	**FC31M843060N**	**FC31M843360N**
66"	67⅝"	**FC31M843066N**	**FC31M843366N**
72"	73⅝"	**FC31M843072N**	**FC31M843372N**

KEWAUNEE

Alpha Column Single-Sided Modules

Specifications:

Single-Sided Add-On Modules are designed to be used in addition to a Starter Module to make multi-module assemblies. The six-inch column is 84" high and slotted on 1" centers to accept the Worksurface Frame or Shelving. Each Starter Module contains one column end post, two modesty panels, and a top rail. Modules may be ordered either with or without Worksurface Frames.

Modules are available in lengths from 36" to 72" in 6" increments. Lengths are based on distance from the center of the first post to the center of the second post. Actual module length is 1⅝" longer than cataloged length.

Worksurface Tops, Shelves, and Service Fittings must be ordered separately.

Single-Sided Add-On Module with Worksurface Frames

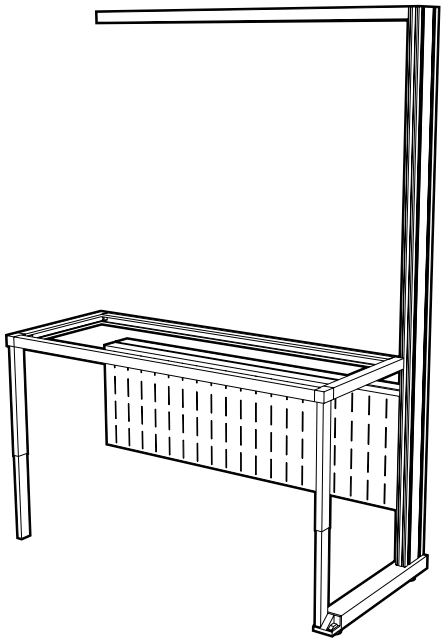

Module Length	for 23" Deep Frames	for 26" Deep Frames
36"	**FC35M843036N**	**FC35M843336N**
42"	**FC35M843042N**	**FC35M843342N**
48"	**FC35M843048N**	**FC35M843348N**
54"	**FC35M843054N**	**FC35M843354N**
60"	**FC35M843060N**	**FC35M843360N**
66"	**FC35M843066N**	**FC35M843366N**
72"	**FC35M843072N**	**FC35M843372N**

Single-Sided Add-On Module without Worksurface Frames

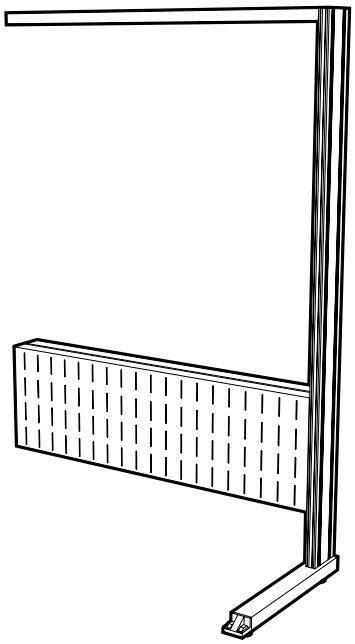

Module Length	for 23" Deep Frames	for 26" Deep Frames
36"	**FC36M843036N**	**FC36M843336N**
42"	**FC36M843042N**	**FC36M843342N**
48"	**FC36M843048N**	**FC36M843348N**
54"	**FC36M843054N**	**FC36M843354N**
60"	**FC36M843060N**	**FC36M843360N**
66"	**FC36M843066N**	**FC36M843366N**
72"	**FC36M843072N**	**FC36M843372N**

Alpha Column Worksurface Tops

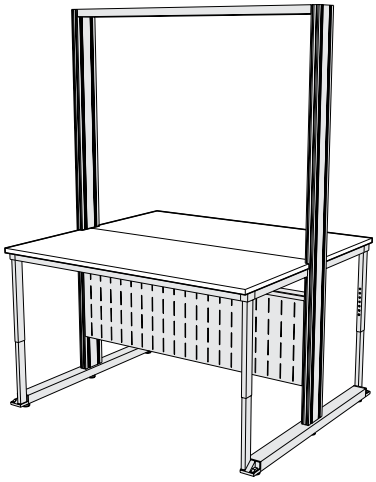

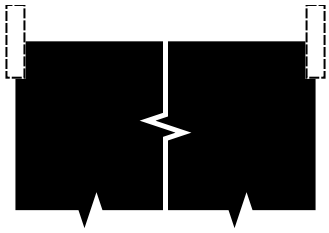

Kemresin Color Option Code

BK = Black **GR = Grey**
PT = Putty **SL = Slate**

Kemresin is available in four standard colors. To specify Kemresin color, place a dash and the two-letter code at the end of the part number.

Example:

FC97R012736N-BK for Black

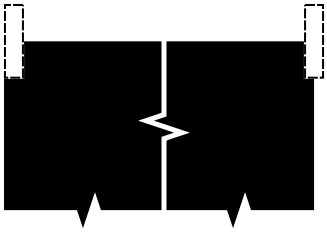

Kemresin Color Option Code

BK = Black **GR = Grey**
PT = Putty **SL = Slate**

Kemresin is available in four standard colors. To specify Kemresin color, place a dash and the two-letter code at the end of the part number.

Example:

FC97R012736L-BK for Black

Specifications:

Worksurface Tops are available in modular sizes to match the Worksurface Frames and are available in four configurations.

- With no overhang on either end (flush with Worksurface rails) for use on center section of assembly runs.
- Flush with Column Posts on either left of right end for use against walls or other tables or equipment.
- Flush with Column Posts on both ends for use on stand alone workstations.

Standard Tops with no Overhang on Ends

27" Deep with 3" Rear Overhang for Double-Sided Assemblies

Length	Kemresin®	Phenolic Resin - Black
36"	**FC97R012736N**	**FC97T012736N**
42"	**FC97R012742N**	**FC97T012742N**
48"	**FC97R012748N**	**FC97T012748N**
54"	**FC97R012754N**	**FC97T012754N**
60"	**FC97R012760N**	**FC97T012760N**
66"	**FC97R012766N**	**FC97T012766N**
72"	**FC97R012772N**	**FC97T012772N**

30" Deep with 3" Rear Overhang for Double-Sided Assemblies

Length	Kemresin®	Phenolic Resin- Black
36"	**FC97R013036N**	**FC97T013036N**
42"	**FC97R013042N**	**FC97T013042N**
48"	**FC97R013048N**	**FC97T013048N**
54"	**FC97R013054N**	**FC97T013054N**
60"	**FC97R013060N**	**FC97T013060N**
66"	**FC97R013066N**	**FC97T013066N**
72"	**FC97R013072N**	**FC97T013072N**

Tops Flush with Column Post on Left End

27" Deep with 3" Rear Overhang for Double-Sided Assemblies

Length	Kemresin®	Phenolic Resin - Black
36"	**FC97R012736L**	**FC97T012736L**
42"	**FC97R012742L**	**FC97T012742L**
48"	**FC97R012748L**	**FC97T012748L**
54"	**FC97R012754L**	**FC97T012754L**
60"	**FC97R012760L**	**FC97T012760L**
66"	**FC97R012766L**	**FC97T012766L**
72"	**FC97R012772L**	**FC97T012772L**

30" Deep with 3" Rear Overhang for Double-Sided Assemblies

Length	Kemresin®	Phenolic Resin -Black
36"	**FC97R013036L**	**FC97T013036L**
42"	**FC97R013042L**	**FC97T013042L**
48"	**FC97R013048L**	**FC97T013048L**
54"	**FC97R013054L**	**FC97T013054L**
60"	**FC97R013060L**	**FC97T013060L**
66"	**FC97R013066L**	**FC97T013066L**
72"	**FC97R013072L**	**FC97T013072L**

KEWAUNEE

Alpha Column Worksurface Tops

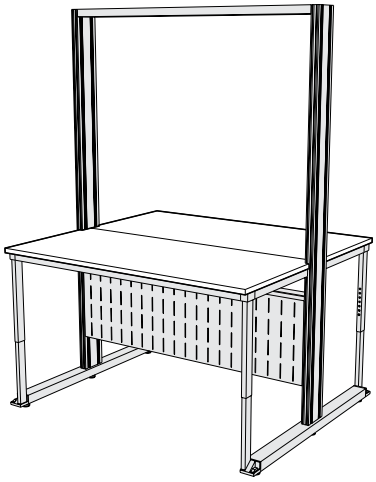

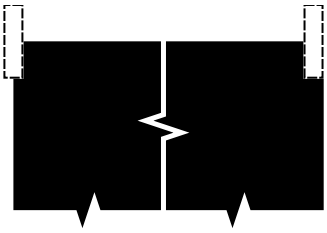

Kemresin Color Option Code

BK = Black **GR = Grey**
PT = Putty **SL = Slate**

Kemresin is available in four standard colors. To specify Kemresin color, place a dash and the two-letter code at the end of the part number.

Example:

FC97R012736R-BK for Black

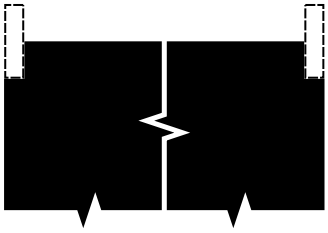

Kemresin Color Option Code

BK = Black **GR = Grey**
PT = Putty **SL = Slate**

Kemresin is available in four standard colors. To specify Kemresin color, place a dash and the two-letter code at the end of the part number.

Example:

FC97R012736B-BK for Black

Specifications:

Worksurface Tops are available in modular sizes to match the Worksurface Frames and are available in four configurations.

- With no overhang on either end (flush with Worksurface rails) for use on center section of assembly runs.
- Flush with Column Posts on either left of right end for use against walls or other tables or equipment.
- Flush with Column Posts on both ends for use on stand alone workstations.

Tops Flush with Column Post on Right End

27" Deep with 3" Rear Overhang for Double-Sided Assemblies

Length	Kemresin®	Phenolic Resin - Black
36"	**FC97R012736R**	**FC97T012736R**
42"	**FC97R012742R**	**FC97T012742R**
48"	**FC97R012748R**	**FC97T012748R**
54"	**FC97R012754R**	**FC97T012754R**
60"	**FC97R012760R**	**FC97T012760R**
66"	**FC97R012766R**	**FC97T012766R**
72"	**FC97R012772R**	**FC97T012772R**

30" Deep with 3" Rear Overhang for Double-Sided Assemblies

Length	Kemresin®	Phenolic Resin
36"	**FC97R013036R**	**FC97T013036R**
42"	**FC97R013042R**	**FC97T013042R**
48"	**FC97R013048R**	**FC97T013048R**
54"	**FC97R013054R**	**FC97T013054R**
60"	**FC97R013060R**	**FC97T013060R**
66"	**FC97R013066R**	**FC97T013066R**
72"	**FC97R013072R**	**FC97T013072R**

Tops Flush with Column Posts on Both Ends

27" Deep with 3" Rear Overhang for Double-Sided Assemblies

Length	Kemresin®	Phenolic Resin - Black
36"	**FC97R012736B**	**FC97T012736B**
42"	**FC97R012742B**	**FC97T012742B**
48"	**FC97R012748B**	**FC97T012748B**
54"	**FC97R012754B**	**FC97T012754B**
60"	**FC97R012760B**	**FC97T012760B**
66"	**FC97R012766B**	**FC97T012766B**
72"	**FC97R012772B**	**FC97T012772B**

30" Deep with 3" Rear Overhang for Double-Sided Assemblies

Length	Kemresin®	Phenolic Resin - Black
36"	**FC97R013036B**	**FC97T013036B**
42"	**FC97R013042B**	**FC97T013042B**
48"	**FC97R013048B**	**FC97T013048B**
54"	**FC97R013054B**	**FC97T013054B**
60"	**FC97R013060B**	**FC97T013060B**
66"	**FC97R013066B**	**FC97T013066B**
72"	**FC97R013072B**	**FC97T013072B**

Alpha Column Worksurface Tops

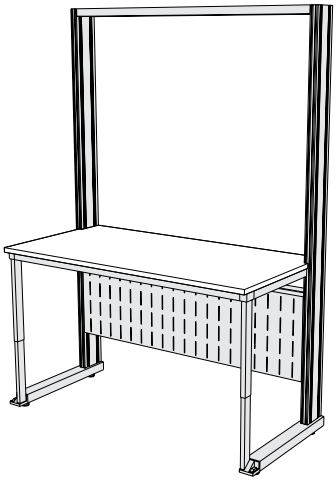

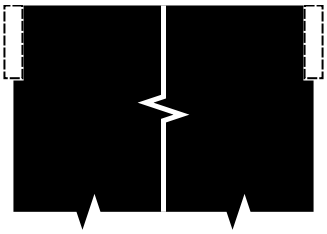

Kemresin Color Option Code

BK = Black **GR = Grey**
PT = Putty **SL = Slate**

Kemresin is available in four standard colors. To specify Kemresin color, place a dash and the two-letter code at the end of the part number.

Example:

FC98R013036N-BK for Black

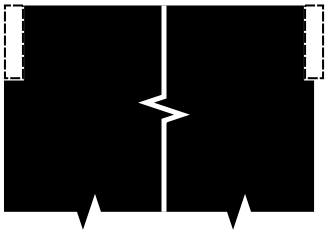

Kemresin Color Option Code

BK = Black **GR = Grey**
PT = Putty **SL = Slate**

Kemresin is available in four standard colors. To specify Kemresin color, place a dash and the two-letter code at the end of the part number.

Example:

FC98R013036L-BK for Black

Specifications:

Worksurface Tops are available in modular sizes to match the Worksurface Frames and are available in four configurations.

- With no overhang on either end (flush with Worksurface rails) for use on center section of assembly runs.
- Flush with Column Posts on either left of right end for use against walls or other tables or equipment.
- Flush with Column Posts on both ends for use on stand alone workstations.

Standard Tops with no Overhangs on Ends

30" Deep with 6" Rear Overhang for Single-Sided Assemblies

Length	Kemresin®	Phenolic Resin - Black
36"	**FC98R013036N**	**FC98T013036N**
42"	**FC98R013042N**	**FC98T013042N**
48"	**FC98R013048N**	**FC98T013048N**
54"	**FC98R013054N**	**FC98T013054N**
60"	**FC98R013060N**	**FC98T013060N**
66"	**FC98R013066N**	**FC98T013066N**
72"	**FC98R013072N**	**FC98T013072N**

33" Deep with 6" Rear Overhang for Single-Sided Assemblies

Length	Kemresin®	Phenolic Resin - Black
36"	**FC98R013336N**	**FC98T013336N**
42"	**FC98R013342N**	**FC98T013342N**
48"	**FC98R013348N**	**FC98T013348N**
54"	**FC98R013354N**	**FC98T013354N**
60"	**FC98R013360N**	**FC98T013360N**
66"	**FC98R013366N**	**FC98T013366N**
72"	**FC98R013372N**	**FC98T013372N**

Tops Flush with Column Post on Left End

30" Deep with 6" Rear Overhang for Single-Sided Assemblies

Length	Kemresin®	Phenolic Resin - Black
36"	**FC98R013036L**	**FC98T013036L**
42"	**FC98R013042L**	**FC98T013042L**
48"	**FC98R013048L**	**FC98T013048L**
54"	**FC98R013054L**	**FC98T013054L**
60"	**FC98R013060L**	**FC98T013060L**
66"	**FC98R013066L**	**FC98T013066L**
72"	**FC98R013072L**	**FC98T013072L**

33" Deep with 6" Rear Overhang for Single-Sided Assemblies

Length	Kemresin®	Phenolic Resin - Black
36"	**FC98R013336L**	**FC98T013336L**
42"	**FC98R013342L**	**FC98T013342L**
48"	**FC98R013348L**	**FC98T013348L**
54"	**FC98R013354L**	**FC98T013354L**
60"	**FC98R013360L**	**FC98T013360L**
66"	**FC98R013366L**	**FC98T013366L**
72"	**FC98R013372L**	**FC98T013372L**

KEWAUNEE

Alpha Column Worksurface Tops

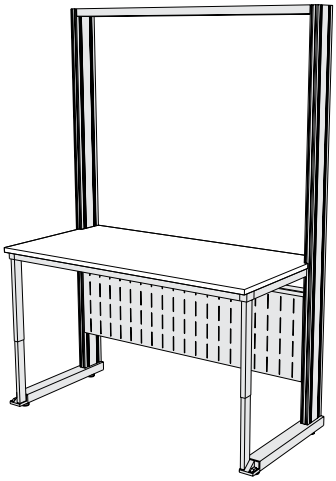

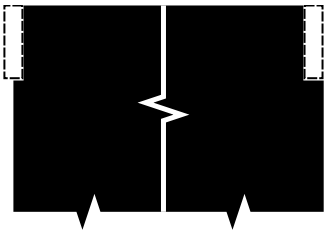

Kemresin Color Option Code

BK = Black **GR = Grey**
PT = Putty **SL = Slate**

Kemresin is available in four standard colors. To specify Kemresin color, place a dash and the two-letter code at the end of the part number.

Example:

FC98R013036R-BK for Black

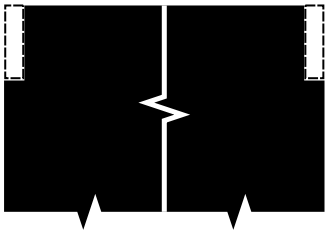

Kemresin Color Option Code

BK = Black **GR = Grey**
PT = Putty **SL = Slate**

Kemresin is available in four standard colors. To specify Kemresin color, place a dash and the two-letter code at the end of the part number.

Example:

FC98R013036B-BK for Black

Specifications:

Worksurface Tops are available in modular sizes to match the Worksurface Frames and are available in four configurations.

- With no overhang on either end (flush with Worksurface rails) for use on center section of assembly runs.
- Flush with Column Posts on either left of right end for use against walls or other tables or equipment.
- Flush with Column Posts on both ends for use on stand alone workstations.

Tops Flush with Column Post on Right End

23" Deep with 6" Rear Overhang for Single-Sided Assemblies

Length	Kemresin®	Phenolic Resin - Black
36"	**FC98R013036R**	**FC98T013036R**
42"	**FC98R013042R**	**FC98T013042R**
48"	**FC98R013048R**	**FC98T013048R**
54"	**FC98R013054R**	**FC98T013054R**
60"	**FC98R013060R**	**FC98T013060R**
66"	**FC98R013066R**	**FC98T013066R**
72"	**FC98R013072R**	**FC98T013072R**

33" Deep with 6" Rear Overhang for Single-Sided Assemblies

Length	Kemresin®	Phenolic Resin - Black
36"	**FC98R013336R**	**FC98T013336R**
42"	**FC98R013342R**	**FC98T013342R**
48"	**FC98R013348R**	**FC98T013348R**
54"	**FC98R013354R**	**FC98T013354R**
60"	**FC98R013360R**	**FC98T013360R**
66"	**FC98R013366R**	**FC98T013366R**
72"	**FC98R013372R**	**FC98T013372R**

Tops Flush with Column Posts on Both Ends

30" Deep with 6" Rear Overhang for Single-Sided Assemblies

Length	Kemresin®	Phenolic Resin - Black
36"	**FC98R013036B**	**FC98T013036B**
42"	**FC98R013042B**	**FC98T013042B**
48"	**FC98R013048B**	**FC98T013048B**
54"	**FC98R013054B**	**FC98T013054B**
60"	**FC98R013060B**	**FC98T013060B**
66"	**FC98R013066B**	**FC98T013066B**
72"	**FC98R013072B**	**FC98T013072B**

33" Deep with 6" Rear Overhang for Single-Sided Assemblies

Length	Kemresin®	Phenolic Resin - Black
36"	**FC98R013336B**	**FC98T013336B**
42"	**FC98R013342B**	**FC98T013342B**
48"	**FC98R013348B**	**FC98T013348B**
54"	**FC98R013354B**	**FC98T013354B**
60"	**FC98R013360B**	**FC98T013360B**
66"	**FC98R013366B**	**FC98T013366B**
72"	**FC98R013372B**	**FC98T013372B**

Alpha Column Adjustable Shelf Assemblies

Specifications:

Adjustable Shelf Assemblies with no rear overhang are designed for use in front of the Modesty Panels or when it is desired to leave the six inch column space open. Each Shelf Assembly consists of two 11 gauge steel Shelf Brackets and a 1" thick Shelf, formed from 16 gauge cold rolled steel.

The Shelf attaches to the shelf brackets without the use of screws, bolts, or other hardware using a unique tab and slot system. The system allows the shelf to be mounted with a 1" cord gap at the rear by simply turning the shelf around. The shelf brackets engage the slots in the column and are adjustable in 1" increments.

Adjustable Shelf Assemblies with No Rear Overhang

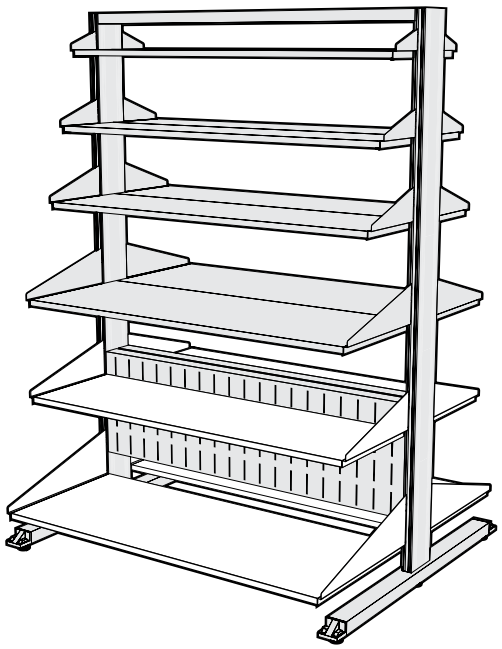

Length	6" Deep Shelf with 6" Brackets	18" Deep Shelf with 18" Brackets
36"	FC21M030636N	FC21M061836N
42"	FC21M030642N	FC21M061842N
48"	FC21M030648N	FC21M061848N
54"	FC21M030654N	FC21M061854N
60"	FC21M030660N	FC21M061860N
66"	FC21M030666N	
72"	FC21M030672N	

Length	9" Deep Shelf with 9" Brackets	21" Deep Shelf with 21" Brackets
36"	FC21M040936N	FC21M072136N
42"	FC21M040942N	FC21M072142N
48"	FC21M040948N	FC21M072148N
54"	FC21M040954N	FC21M072154N
60"	FC21M040960N	FC21M072160N
66"	FC21M040966N	
72"	FC21M040972N	

Length	12" Deep Shelf with 12" Brackets	24" Deep Shelf with 24" Brackets
36"	FC21M051236N	FC21M072436N
42"	FC21M051242N	FC21M072442N
48"	FC21M051248N	FC21M072448N
54"	FC21M051254N	FC21M072454N
60"	FC21M051260N	FC21M072460N
66"	FC21M051266N	
72"	FC21M051272N	

Length	15" Deep Shelf with 15" Brackets
36"	FC21M061536N
42"	FC21M061542N
48"	FC21M061548N
54"	FC21M061554N
60"	FC21M061560N
66"	FC21M061566N
72"	FC21M061572N

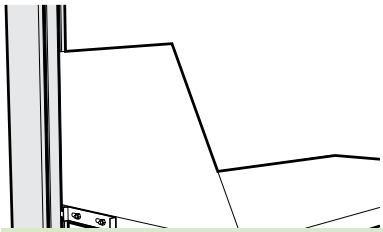

Optional Shelf Locking Tab

Sliding tab mounted on Shelf Bracket locks shelf into Module Upright to keep it from being accidently removed.

To specify, add an **-K** to the end of the Shelf Assembly part number. Example: **FC21M051236N-K**

KEWAUNEE

Alpha Column Adjustable Shelf Assemblies

Specifications:

Adjustable Shelf Assemblies for Double-Sided Alpha Columns are three inches deeper than the Shelf Bracket to allow the Shelves on oposite sides of the column to form a continuous surface. Each Shelf Assembly consists of two 11 gauge steel Shelf Brackets and a 1" thick Shelf, formed from 16 gauge cold rolled steel.

The Shelf attaches to the Shelf Brackets without the use of screws, bolts, or other hardware using a unique tab and slot system. The system allows the shelf to be mounted with a 1" cord gap at the rear by simply turning the shelf around. The shelf brackets engage the slots in the column and are adjustable in 1" increments.

Adjustable Shelf Assemblies with 3" Rear Overhang

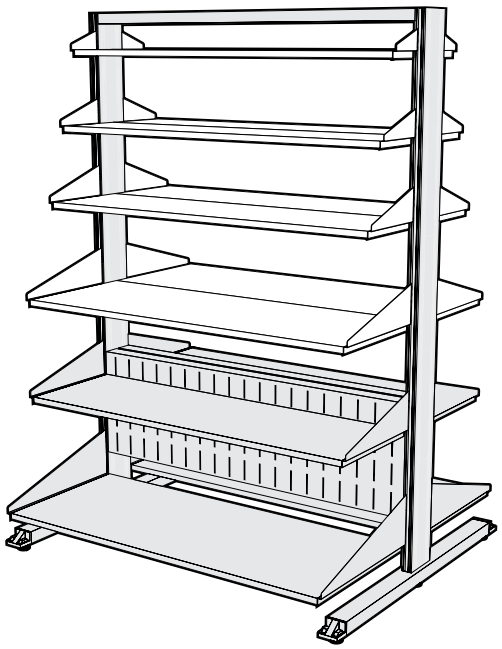

Length	9" Deep Shelf with 6" Brackets	18" Deep Shelf with 15" Brackets
36"	**FC21M030636R**	**FC21M061536R**
42"	**FC21M030642R**	**FC21M061542R**
48"	**FC21M030648R**	**FC21M061548R**
54"	**FC21M030654R**	**FC21M061554R**
60"	**FC21M030660R**	**FC21M061560R**
66"	**FC21M030666R**	
72"	**FC21M030672R**	

Length	12" Deep Shelf with 9" Brackets	21" Deep Shelf with 18" Brackets
36"	**FC21M040936R**	**FC21M061836R**
42"	**FC21M040942R**	**FC21M061842R**
48"	**FC21M040948R**	**FC21M061848R**
54"	**FC21M040954R**	**FC21M061854R**
60"	**FC21M040960R**	**FC21M061860R**
66"	**FC21M040966R**	
72"	**FC21M040972R**	

Length	15" Deep Shelf with 12" Brackets	24" Deep Shelf with 21" Brackets
36"	**FC21M051236R**	**FC21M072136R**
42"	**FC21M051242R**	**FC21M072142R**
48"	**FC21M051248R**	**FC21M072148R**
54"	**FC21M051254R**	**FC21M072154R**
60"	**FC21M051260R**	**FC21M072160R**
66"	**FC21M051266R**	
72"	**FC21M051272R**	

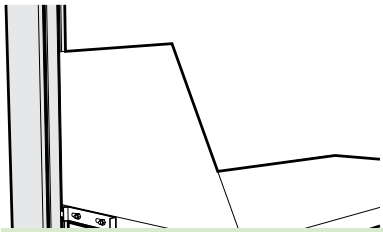

Optional Shelf Locking Tab

Sliding tab mounted on Shelf Bracket locks shelf into Module Upright to keep it from being accidently removed.

To specify, add an **-K** to the end of the Shelf Assembly part number.
Example: **FC21M051236R-K**

Alpha Column Adjustable Shelf Assemblies

Specifications:

Adjustable Shelf Assemblies for Single-Sided Alpha Columns are six inches deeper than the Shelf Bracket to allow the shelf to pass through to the rear of the column. Each Shelf Assembly consists of two 11 gauge steel Shelf Brackets and a 1" thick Shelf, formed from 16 gauge cold rolled steel.

The Shelf attaches to the Shelf Brackets without the use of screws, bolts, or other hardware using a unique tab and slot system. The system allows the shelf to be mounted with a 1" cord gap at the rear by simply turning the shelf around. The shelf brackets engage the slots in the column and are adjustable in 1" increments.

Adjustable Shelf Assemblies with 6" Rear Overhang

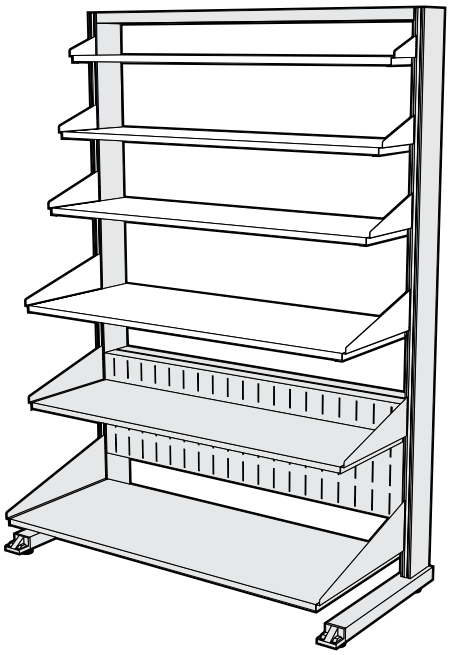

Length	12" Deep Shelf with 6" Brackets	21" Deep Shelf with 15" Brackets
36"	**FC21M030636X**	**FC21M061536X**
42"	**FC21M030642X**	**FC21M061542X**
48"	**FC21M030648X**	**FC21M061548X**
54"	**FC21M030654X**	**FC21M061554X**
60"	**FC21M030660X**	**FC21M061560X**
66"	**FC21M030666X**	
72"	**FC21M030672X**	

Length	15" Deep Shelf with 9" Brackets	24" Deep Shelf with 18" Brackets
36"	**FC21M040936X**	**FC21M061836X**
42"	**FC21M040942X**	**FC21M061842X**
48"	**FC21M040948X**	**FC21M061848X**
54"	**FC21M040954X**	**FC21M061854X**
60"	**FC21M040960X**	**FC21M061860X**
66"	**FC21M040966X**	
72"	**FC21M040972X**	

Length	18" Deep Shelf with 12" Brackets
36"	**FC21M051236X**
42"	**FC21M051242X**
48"	**FC21M051248X**
54"	**FC21M051254X**
60"	**FC21M051260X**
66"	**FC21M051266X**
72"	**FC21M051272X**

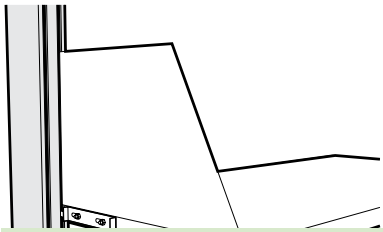

Optional Shelf Locking Tab

Sliding tab mounted on Shelf Bracket locks shelf into Module Upright to keep it from being accidently removed.

To specify, add an **-K** to the end of the Shelf Assembly part number.
Example: **FC21M051236S-K**

KEWAUNEE

Service Tunnels & Worksurface Frames

Specifications:

Service Tunnels may be added to any Alpha Column Module to create an electrical panel for both power and data. Tunnels are 6" high and 6" deep and contain standard electrical cutouts as shown below.

Electrical Devices must be ordered separately.

Worksurface Frames may be added to any Alpha Column Module to create Worksurface from 30" to 37" high, adjustable on 1" centers. Alpha Column Modules may be ordered with the Worksurface Frames included, or they may be ordered separately for reconfiguration.

Worksurface Tops must be ordered separately.

Service Tunnel

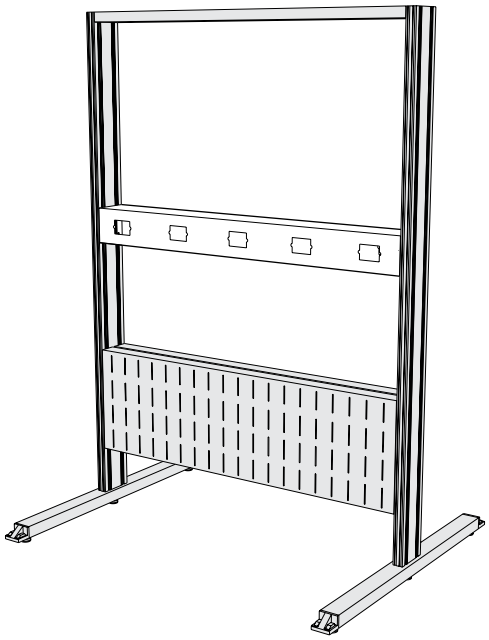

Length	Part Number	Cutouts
36"	**FC40M060636N**	**3 per side**
42"	**FC40M060642N**	**3 per side**
48"	**FC40M060648N**	**4 per side**
54"	**FC40M060654N**	**4 per side**
60"	**FC40M060660N**	**5 per side**
66"	**FC40M060666N**	**5 per side**
72"	**FC40M060672N**	**6 per side**

Worksurface Frames with Front Support Legs

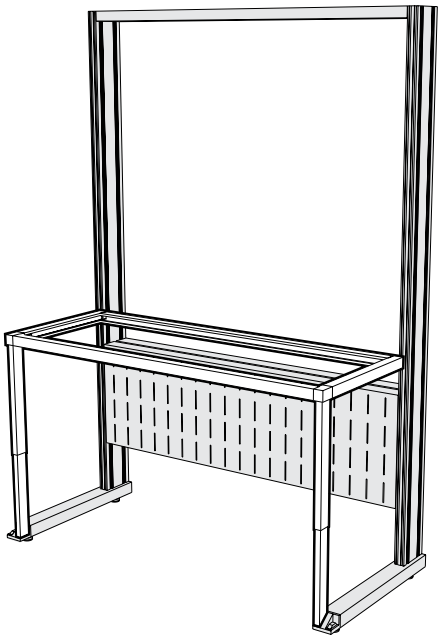

Length	23" Deep Frame	26" Deep Frame
36"	**FC80M372336N**	**FC80M372636N**
42"	**FC80M372342N**	**FC80M372642N**
48"	**FC80M372348N**	**FC80M372648N**
54"	**FC80M372354N**	**FC80M372654N**
60"	**FC80M372360N**	**FC80M372660N**
66"	**FC80M372366N**	**FC80M372666N**
72"	**FC80M372372N**	**FC80M372672N**

Service Options

Specifications:

Internal Service Tubes are required to mount services on the Alpha Column Legs. They are factory installed and consist of either copper or stainless steel ¼" tubing with a female ⅜" IPS outlet escutchion, mounted in the leg, and a female ⅜" IPS inlet, at the top of the leg. They are available in three lengths that correspond to the three mounting locations in the leg.

Ball Valves are chrome plated brass and provide on/off control of gas, air, or vacuum at pressures up to 75 PSI.

Needle Point Cocks are chrome plated brass with a brass floating cone and integral brass seat. They provide metering control of laboratory gases at pressures up to 60 PSI.

Internal Service Tubes

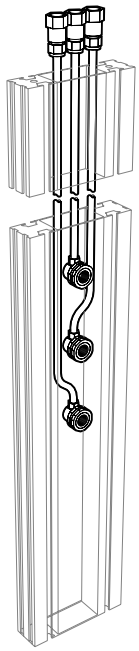

Copper Tube
for non-burning gases
⅜" IPS Female Inlet — ⅜" IPS Female Outlet

Length	Part Number	
40"	**W-3320-40**	*top hole*
44"	**W-3320-44**	*middle hole*
48"	**W-3320-48**	*bottom hole*

Stainless Steel Tube
for natural & reactive gases
⅜" IPS Female Inlet — ⅜" IPS Female Outlet

Length	Part Number	
40"	**W-3420-40**	*top hole*
44"	**W-3420-44**	*middle hole*
48"	**W-3420-48**	*bottom hole*

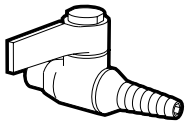

Ball Valve
⅜" IPS Male Inlet

Part Number	Service
W-0242-0A	Air
W-0242-0G	Gas
W-0242-0N	Nitrogen
W-0242-0R	Argon
W-0242-0V	Vacuum
W-0242-00	Specify

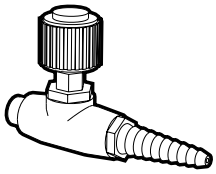

Needle Point Cock
⅜" IPS Male Inlet

Part Number	Service
W-0243-0A	Air
W-0243-0G	Gas
W-0243-0N	Nitrogen
W-0243-0R	Argon
W-0243-0V	Vacuum
W-0243-00	Specify

Keyed Quick-Connect Fittings

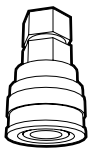

Keyed Quick-Connect Fittings are available for Hoses and Internal Service Tubes to ease service connection and disconnection during bench relocation. They are available in eight sizes (keys) which keeps service outlets from being connected to the wrong service.

Male
Quick-Connect Fitting
⅜" IPS Male Outlet

Part Number	Key Color
W-8111-K1	Black
W-8111-K2	Orange
W-8111-K3	Green
W-8111-K4	Yellow
W-8111-K5	Blue
W-8111-K6	White
W-8111-K7	Purple
W-8111-K8	Brown

Female
Quick-Connect Fitting
⅜" IPS Female Inlet

Part Number	Key Color
W-9112-K1	Black
W-9112-K2	Orange
W-9112-K3	Green
W-9112-K4	Yellow
W-9112-K5	Blue
W-9112-K6	White
W-9112-K7	Purple
W-9112-K8	Brown

Key Number & Color Code	Standard Service	Female Body Sleeve Dia.		Male Body Sleeve Dia.	
		in.	mm	in	mm
K1 Black	**Helium**	**1.13**	**28.7**	**0.99**	**25.1**
K2 Orange	**Air**	**1.16**	**29.5**	**1.02**	**25.8**
K3 Green	**Cold Water**	**1.19**	**30.2**	**1.05**	**26.6**
K4 Yellow	**Vacuum**	**1.22**	**31.0**	**1.08**	**27.4**
K5 Blue	**Gas**	**1.24**	**31.5**	**1.11**	**28.1**
K6 White	**—**	**1.28**	**32.5**	**1.14**	**28.9**
K7 Purple	**Argon**	**1.31**	**33.3**	**1.17**	**29.7**
K8 Brown	**Nitrogen**	**1.34**	**34.0**	**1.20**	**30.4**

KEWAUNEE

Service Accessories

Specifications:

Service Hoses are required to carry services from overhead service carriers to the top of the Support Frame. They are available in reinforced PVC, polyurethane, or braided stainless steel.

Power Cords are required to carry electrical power from the overhead service carriers to the top of the Support Frame. The SJ 12/3 cord is available in various configurations.

Keyed Quick-Connect Fittings are available for Hoses and Internal Service Tubes to ease service connection and disconnection during bench relocation. They are available in eight sizes (keys) which keeps service outlets from being connected to the wrong service.

Service Hoses

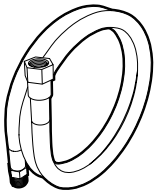

Reinforced PVC Hose

for Non-burning Gases
⅜" IPS Female Inlet
⅜" IPS Male Outlet

Length	Part Number
36"	**W-1133-36-__**
72"	**W-1133-72-__**

Color Option Codes

BK = Black **YE** = Yellow
OR = Orange **WH** = White
Add two letter code to end of Part Number to specifiy color.

Braided Stainless Steel Hose

for Natural & Reactive Gases
⅜" IPS Female Inlet
⅜" IPS Male Outlet

Length	Part Number
36"	**W-1233-36**
72"	**W-1233-72**

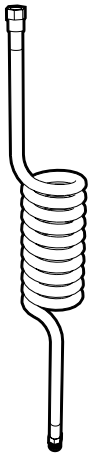

Coiled Polyurethane Hose

for Non-burning Gases
⅜" IPS Female Inlet
⅜" IPS Male Outlet
Transparent Light Blue

Length	Part Number
72"	**W-1533-72**

Power Cords

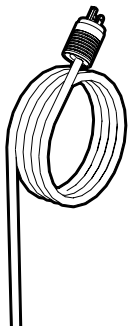

Single-circuit 3-wire

20amp/120 VAC

L	Part Number	Plug
36"	**W-5621-36**	St. Blade
72"	**W-5621-72**	St. Blade
36"	**W-5622-36**	Twist-Lock
72"	**W-5622-72**	Twist-Lock

Dual-circuit 4-wire

20amp/120 VAC

L	Part Number	Plug
36"	**W-5624-36**	Twist-Lock
72"	**W-5624-72**	Twist-Lock

Hose/Cord Wrap

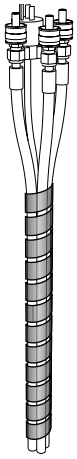

Poly Hose Wrap

Spiral wrap for bundling service lines and cords. Expandable from 1" to 2" diameter. May be trimmed to length with scissors.

L	Part Number	Color
36"	**F-8250-36-BK**	Black
36"	**F-8250-36-NA**	Natural
72"	**F-8250-72-BK**	Black
72"	**F-8250-72-NA**	Natural

Steel and Wood Cabinets

Storage cabinets can be found in their own catalogs.

Research Collection Steel Furniture and Signature Series Wood Furniture

Steel Base Cabinets

- Electrostatically applied, chemical resistant, powder coat finish available in colors to compliment any laboratory environment
- Heavy gauge formed and welded steel cabinet body construction provides strength and durability
- One piece drawer body, radiused all four sides
- Furnished standard with 100 lb. load rated, full-extension, soft-close drawer slides
- One-piece case bottom & horizontal front rail
- Furnished standard with finished back
- Exclusive positive door catch option
- Five-knuckle, semi-concealed, and concealed hinges available

Wood Base Cabinets

- Multiple coat, chemical resistant finish system formulated to highlight the natural grain patterns
- Dovetailed drawer construction with nine-ply hardwood plywood drawer sides
- ¾" seven-ply hardwood plywood end panels, bottom and shelf, with solid hardwood facing
- Full extension, ball bearing, 100 lb. load rated, drawer slides, standard on all drawers and pullboards.
- ¾" seven-ply hardwood plywood finished back dadoed into end panels and bottom
- Institutional type five-knuckle offset door hinges rated for 150 pound loads

KEWAUNEE

Upper & Full Height Storage Cabinets

Upper Cabinet Hanging System

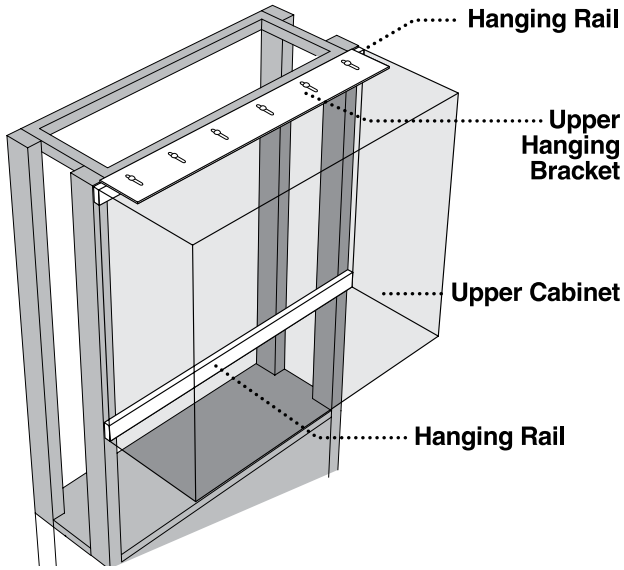

With the use of an Upper Hanging Bracket and a pair of Hanging Rails, Kewaunee's standard Wall Cabinets can be mounted on Alpha System's Structural Module. Two Hanging Rails are snapped into the Upper Carrier upright slots. The Upper Hanging Bracket bolts to the top of the upper cabinet which then hangs on the upper Hanging Rail. The lower Hanging Rail allows the bottom of the cabinet to be securely fastened to the module. This system allows the Upper Cabinet to be moved both vertically and horizontally on the Structural Module.

Hanging Rails and Upper Hanging Brackets, are finished to match the Structural Module and furnished with all required hardware.

Hanging Rails are furnished in pairs.

Order the appropriate Upper Hanging Bracket in the same length as the Upper Cabinet. The Hanging Rails must be the same length as the Structural Module.

Upper Hanging Bracket

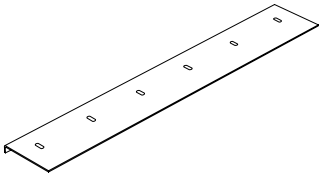

Length	Part Number
18"	**F48M040118N**
24"	**F48M040124N**
30"	**F48M040130N**
36"	**F48M040136N**
42"	**F48M040142N**
48"	**F48M040148N**

Hanging Rails

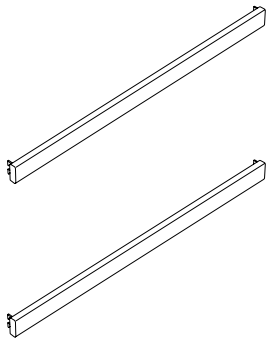

Length	Part Number	
24"	**F49M020124N**	1 pair
30"	**F49M020130N**	1 pair
36"	**F49M020136N**	1 pair
42"	**F49M020142N**	1 pair
48"	**F49M020148N**	1 pair
54"	**F49M020154N**	1 pair
60"	**F49M020160N**	1 pair
66"	**F49M020166N**	1 pair
72"	**F49M020172N**	1 pair

Overhead Service Carriers

- **Service Enclosures**
  Suspended sheet metal enclosure able to accommodate most laboratory plumbing, electrical, data, and localized exhaust requirements. May be pre-plumbed and pre-wired for easy single-point connection at jobsite.

- **Ceiling Service Panels**
  Designed to integrate into a standard ceiling grid providing a low cost method of delivering plumbing, electrical, and data to today's laboratory bench.

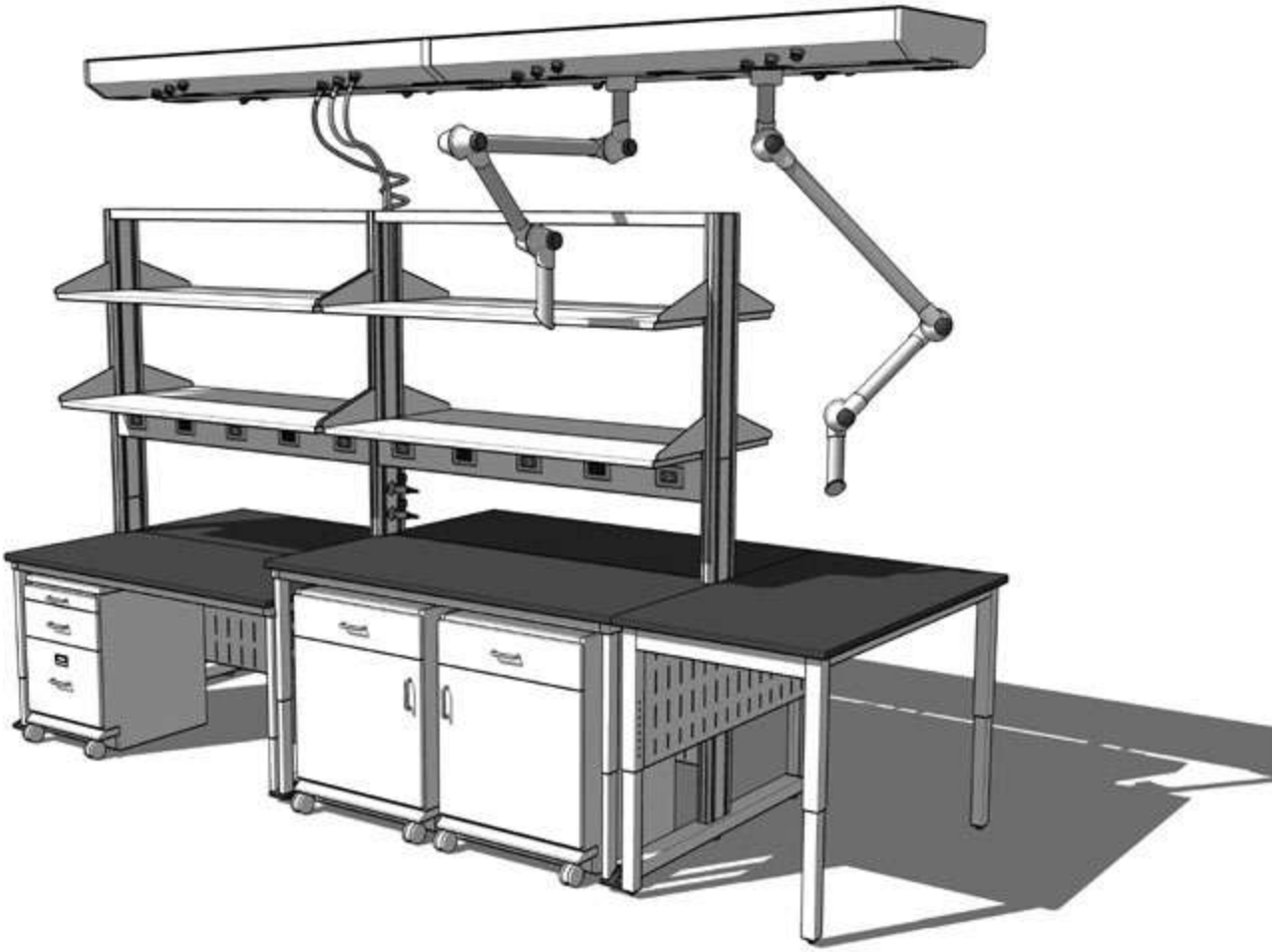

KEWAUNEE

Service Enclosures

Features:

- Compact design able to integrate multiple plumbing, power, lighting, data, and localized exhaust elements
- Available pre-plumbed and pre-wired
- Power components are UL listed, and pre-wiring is available
- Accommodates localized fume extraction devices
- Accommodates light fixtures
- Sections may be assemblied in the field for continuous runs
- Mounts to standard strut components and hardware
- Available in all standard powder finish colors
- Customized to meet your project requirements
- Accommodates all lab services including:
  - Common gases, air, vacuum, and water
  - High purity and special gases
  - Power and data
  - Lighting and exhaust
- Accepts multiple fitting options including:
  - Standard or fine control valves
  - Pressure gauges and regulators
  - Quick-connect valves
  - Quick-connect fittings and hoses
  - Communication and data outlets
  - Electrical service outlets
    Shut-off valves

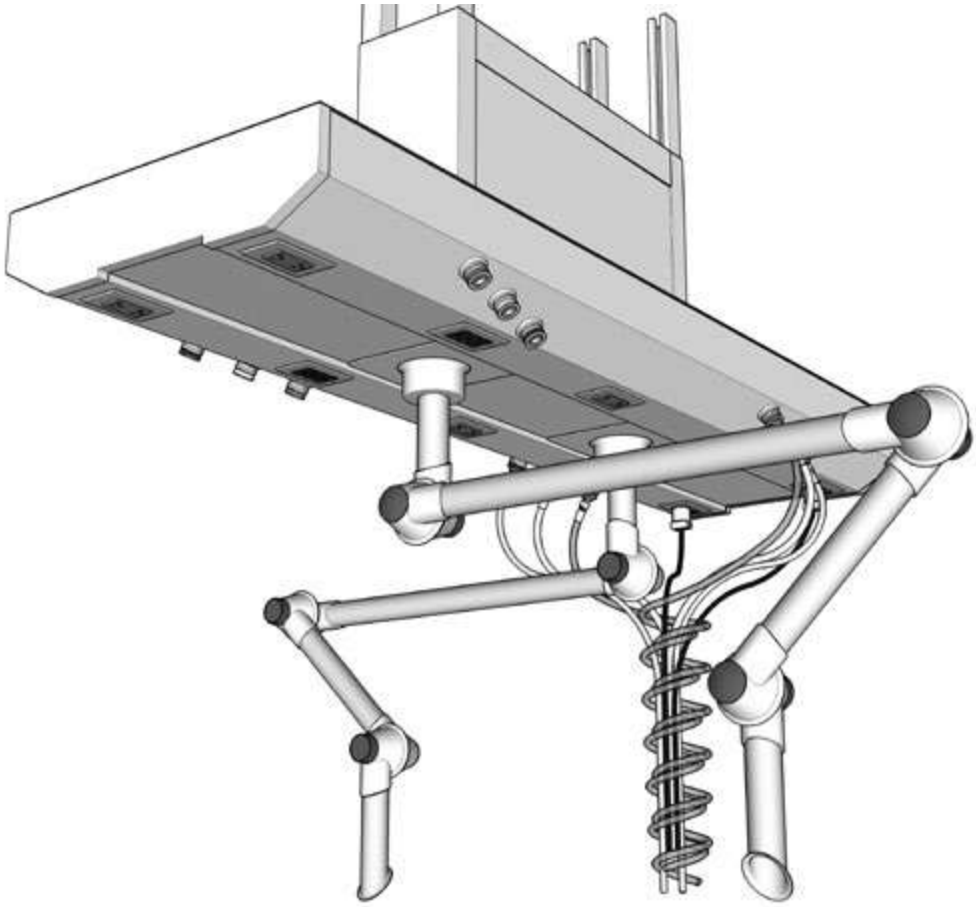

Service Enclosures

Service Enclosure

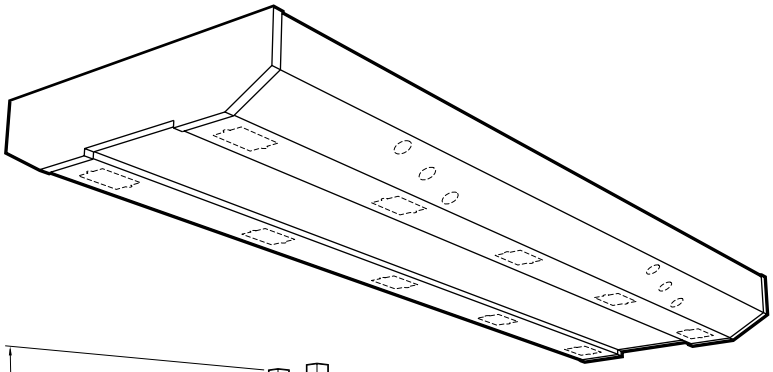

- Available in up to 8 foot lengths
- Sections may be joined together to make continuous runs
- Specify service and fixture cutouts and locations
- Sections may be pre-plumbed and pre-wired to a single point of connection
- Three configurations available.
- Order service fittings and electrical fixtures separately

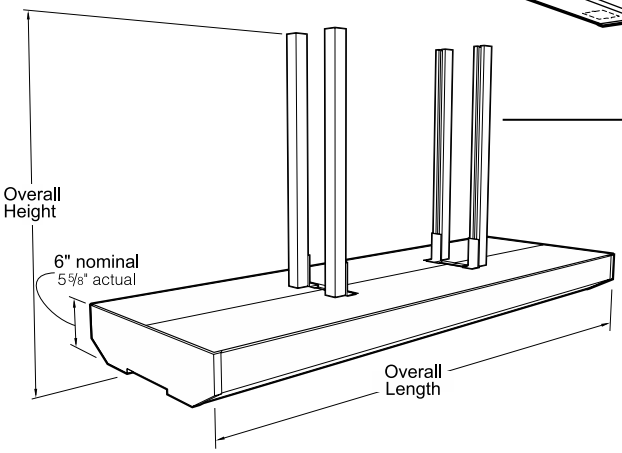

Open Support Struts

SC21M□□24□□

Overall Height	Depth	Overall Length
18 = 18"	**18** = 18"	**36** = 36"
24 = 24"	**24**=24"	**48** = 48"
30 = 30"		**60** = 60"
36 = 36"		**72** = 72"
42 = 42"		**96** = 96"
48 = 48"		
54 = 54"		

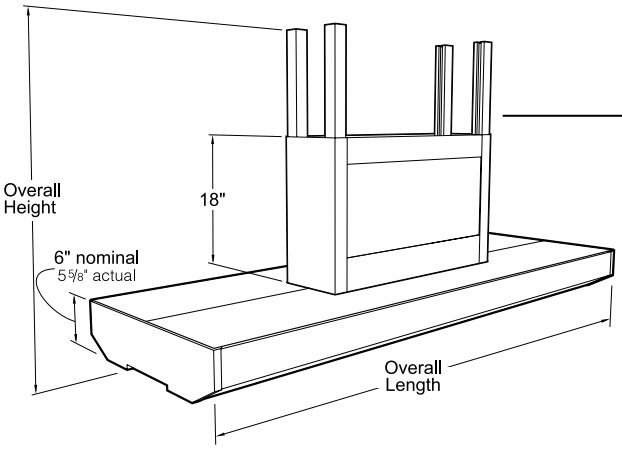

24" Vertical Pipe Chase

SC22M□□24□□

Overall Height	Depth	Overall Length
30 = 30"	**18** = 18"	**36** = 36"
36 = 36"	**24**=24"	**48** = 48"
42 = 42"		**60** = 60"
48 = 48"		**72** = 72"
54 = 54"		**96** = 96"

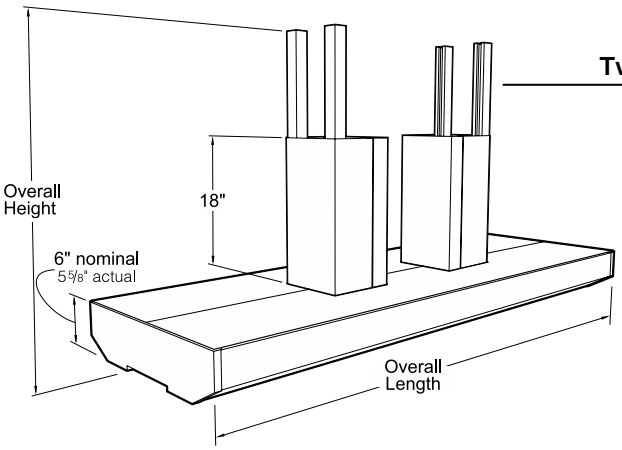

Twin 8" Vertical Pipe Chases

SC23M□□24□□

Overall Height	Depth	Overall Length
30 = 30"	**18** = 18"	**36** = 36"
36 = 36"	**24**=24"	**48** = 48"
42 = 42"		**60** = 60"
48 = 48"		**72** = 72"
54 = 54"		**96** = 96"

KEWAUNEE

Ceiling Service Panels

Features:

- Designed to integrate into common ceiling grids providing a low cost method of delivering plumbings, electrial, and data services to the lab bench
- Fits in standard 2' x 2' and 2' x 4' ceiling grids
- Power components are UL listed
- Available in standard powder coat finish colors
- May be customized to meet your project requirements
- Accommodates multiple lab services including:
  - Common gases, air, vacuum, and water
  - High purity and special gases
  - Power
  - Data
- Accepts multiple fitting options including:
  - Standard or fine control valves
  - Pressure gauges and regulators
  - Quick-connect valves
  - Quick-connect fittings and hoses
  - Communication and data outlets
- Electrical service outlets

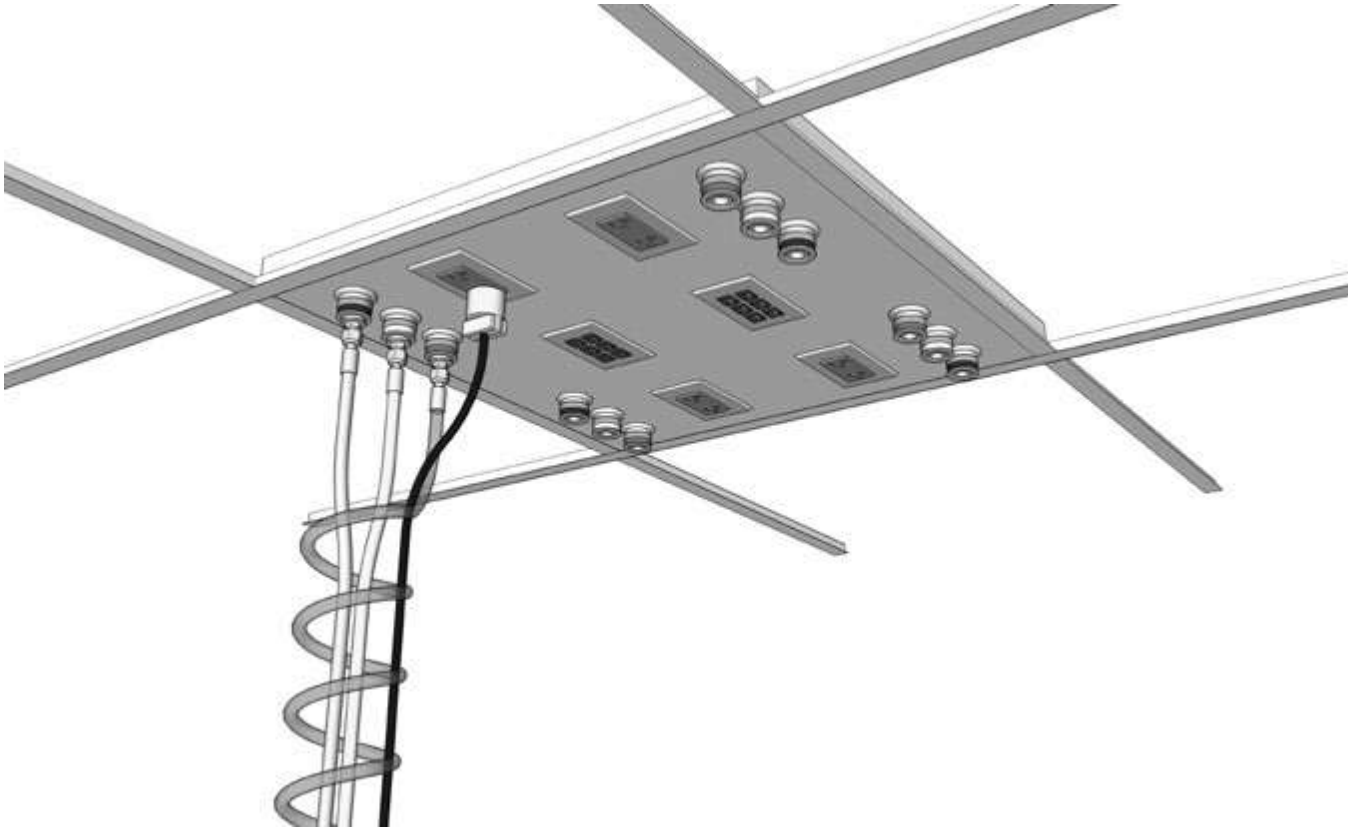

Ceiling Service Panels and Accessories

Ceiling Service Panels are fabricated from powder coated 16 gauge steel in two sizes to fit standard ceiling grid. They can be punched to accept most electrical, data, or service fittings. **Fittings and Fixtures must be ordered separately.**

Electrical Fixtures are furnished complete with device, box and cover plate. They may be supplied loose or installed.

Keyed Quick-Connect Fittings are available for Hoses to ease service connection and disconnection during bench relocation. They are available in eight sizes (keys) which keeps service outlets from being connected to the wrong service.

Ceiling Service Panels

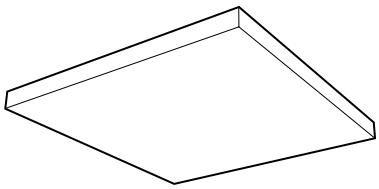

Part Number	Dimensions (HxDxL)
SC10M022424	1½" x 24" x 24"

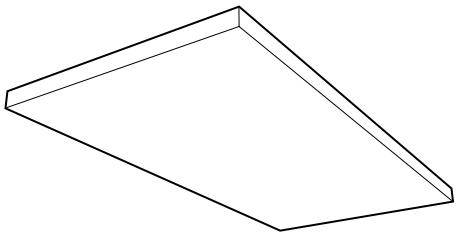

Part Number	Dimensions (HxDxL)
SC10M022448	1½" x 24" x 48"

Electrical & Data Fixtures

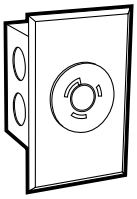

Twist-lock
Single-circuit 20 amp

Part Number	Color
0620-1K	Black

NEMA L5-20 3-wire, specification grade, 120 VAC, 20 amp, single receptacle.

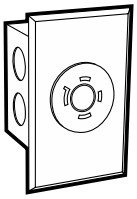

Dual-circuit
Twist-lock 20 amp

Part Number	Color
0624-1K	Black

NEMA L14-20 4-wire, specification grade receptacle. Capable of carrying two 120 VAC, 20 amp circuits.
Note: **Check local electrical codes for compliance.**

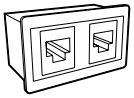

RJ45 8P8C
Data/Comm Outlet

Part Number	Category	Color
0720-0K-6	Cat-6	Black
0720-0V-6	Cat-6	Ivory
0720-0K-6a	Cat-6a	Black
0720-0V-6a	Cat-6a	Ivory

(2) RJ45 8P8C Outlets
Fits in 1¼" x 2" cutout.

Panel Mouted Keyed Quick-connect Fittings

for use on Enclosures & Panels

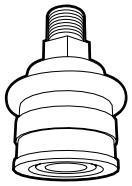

Female
Panel Mount
⅜" IPS Male

Part Number	Key Color
W-9122-K1	Black
W-9122-K2	Orange
W-9122-K3	Green
W-9122-K4	Yellow
W-9122-K5	Blue
W-9122-K6	White
W-9122-K7	Purple
W-9122-K8	Brown

Keyed Quick-connect Fittings

Key Number & Color Code	Standard Service	Female Body Sleeve Dia.		Male Body Sleeve Dia.	
		in	mm	in	mm
K1 Black	**Helium**	**1.13**	**28.7**	**0.99**	**25.1**
K2 Orange	**Air**	**1.16**	**29.5**	**1.02**	**25.8**
K3 Green	**Water**	**1.19**	**30.2**	**1.05**	**26.6**
K4 Yellow	**Vacuum**	**1.22**	**31.0**	**1.08**	**27.4**
K5 Blue	**Gas**	**1.24**	**31.5**	**1.11**	**28.1**
K6 White	**—**	**1.28**	**32.5**	**1.14**	**28.9**
K7 Purple	**Argon**	**1.31**	**33.3**	**1.17**	**29.7**
K8 Brown	**Nitrogen**	**1.34**	**34.0**	**1.20**	**30.4**

KEWAUNEE

Service Carrier & Panel Accessories

Service Hoses are available in reinforced PVC, polyurethane, or braided stainless steel. PVC hoses are available in 9 colors to match quick-connect color codes.

Specifiy PVC hose color by placing color code at end of hose part number. **Example:** W-1133-36-**02** for Orange hose

Power Cords are available in various lengths and configurations.

Extension Service Hoses

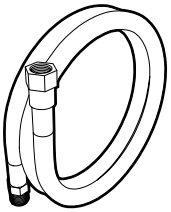

Reinforced PVC Hose
for Non-burning Gases
⅜" IPS Female Inlet
⅜" IPS Male Outlet

Length	Part Number
36"	**W-1133-36-0_**
48"	**W-1133-48-0_**
60"	**W-1133-60-0_**
72"	**W-1133-72-0_**
96"	**W-1133-96-0_**

Hose Colors

Color Code	Color	Color Code	Color
01	Black	06	White
02	Orange	07	Purple
03	Green	08	Brown
04	Yellow	09	Clear
05	Blue		

Hose/Cord Wrap

Braided Stainless Steel Hose
for Natural & Reactive Gases
⅜" IPS Female Inlet
⅜" IPS Male Outlet

Length	Part Number
36"	**W-1233-36-00**
48"	**W-1233-48-00**
60"	**W-1233-60-00**
72"	**W-1233-72-00**
96"	**W-1233-96-00**

Keyed Quick-connect Fittings for Hoses

Male Hose Mounted Quick-connect Fitting
⅜" IPS Male

Part Number	Key Color
W-8111-K1	Black
W-8111-K2	Orange
W-8111-K3	Green
W-8111-K4	Yellow
W-8111-K5	Blue
W-8111-K6	White
W-8111-K7	Purple
W-8111-K8	Brown

Female Hose Mounted Quick-connect Fitting
⅜" IPS Female

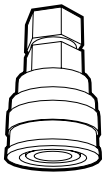

Part Number	Key Color
W-9112-K1	Black
W-9112-K2	Orange
W-9112-K3	Green
W-9112-K4	Yellow
W-9112-K5	Blue
W-9112-K6	White
W-9112-K7	Purple
W-9112-K8	Brown

Coiled Hose

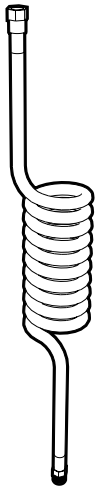

Coiled Polyurethane Hose
for Non-burning Gases
⅜" IPS Female Inlet
⅜" IPS Male Outlet

Length	Part Number
72"	**W-1533-72**

Hose Wrap

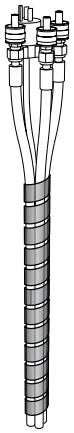

Poly Hose Wrap
Spiral wrap for bundling service lines and cords. Expandable from 1" to 2" diameter. May be trimmed to length with scissors.

L	Part Number	Color
36"	**F-8250-36-BK**	Black
36"	**F-8250-36-NA**	Natural
72"	**F-8250-72-BK**	Black
72"	**F-8250-72-NA**	Natural

Power Cords

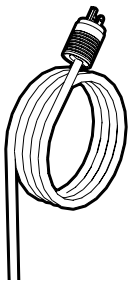

Single-circuit 3-wire
120 VAC — 20A — NEMA L5-20

Length	Part Number	Plug Type
36"	**W-5622-36**	Twist-Lock
48"	**W-5622-48**	Twist-Lock
60"	**W-5622-60**	Twist-Lock
72"	**W-5622-72**	Twist-Lock
96"	**W-5622-96**	Twist-Lock

Dual-circuit 4-wire
120 VAC — 20A — NEMA L14-20

Length	Part Number	Plug Type
36"	**W-5624-36**	Twist-Lock
48"	**W-5624-48**	Twist-Lock
60"	**W-5624-60**	Twist-Lock
72"	**W-5624-72**	Twist-Lock
96"	**W-5624-96**	Twist-Lock

Alpha System Accessories

Features:

- Tackboards
- Markerboards
- Pegboards
- Hanging Brackets
- Heavy Duty Benches
- Motorized Adjustable Height Bench
- Rack Mount Equipment Cabinet
- Undercounter Refrigerators & Freezers
- Balance Tables
- Key Cases
- Base Molding
- Service Fittings
- Water Faucets
- Distilled/Deionized Water Faucets
- Laboratory Safety Fittings
- Vandal-Resistant Fittings
- Epoxy Resin Cupsinks & Tub Sinks
- Stainless Steel Sinks
- Electrical Fixtures & Pedestals
- Chairs & Stools

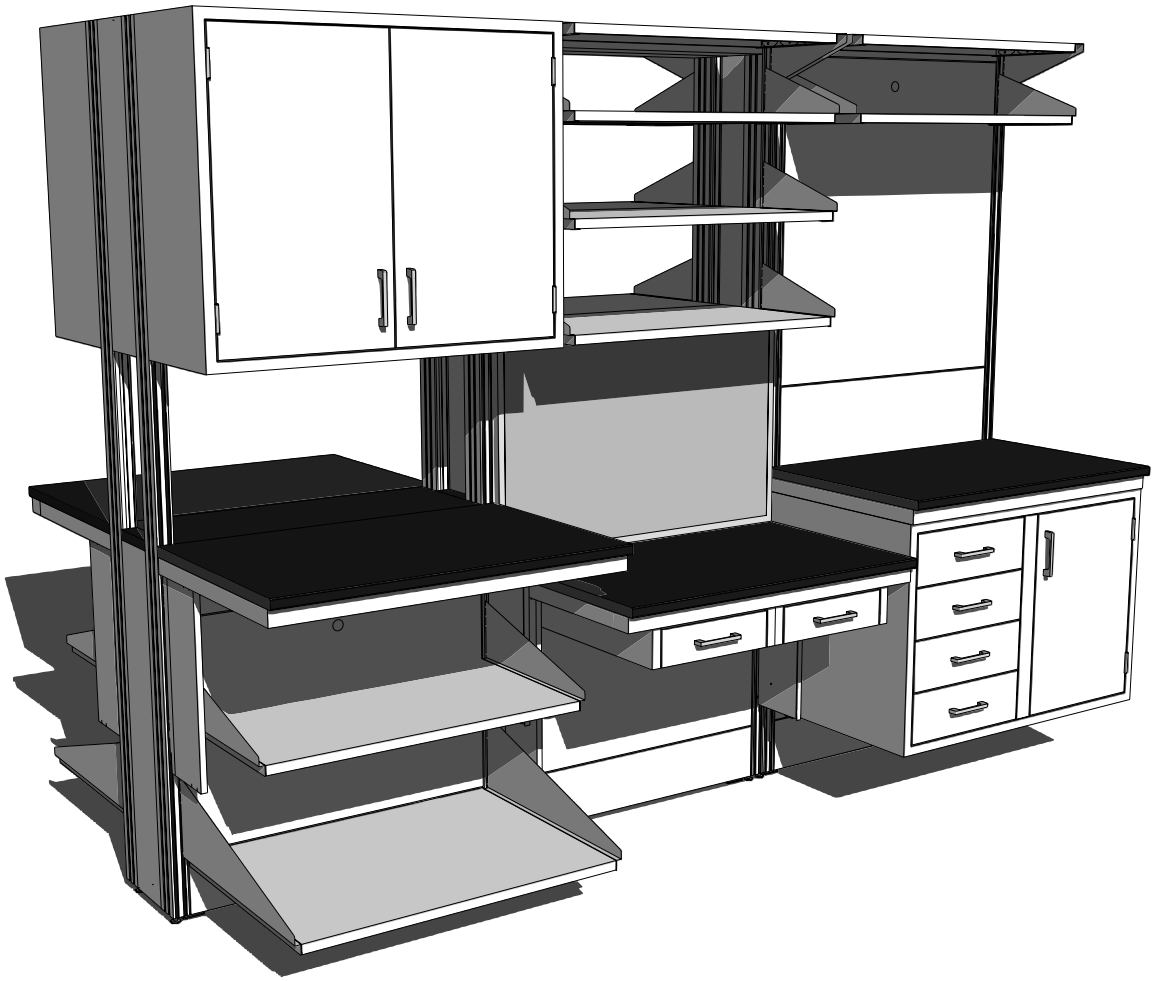

KEWAUNEE

Tackboards & Markerboards

Tackboards and Markerboards

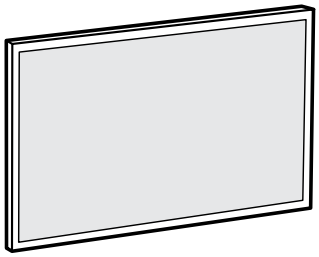

Length	Height	Tackboard	Markerboard
24"	18"	**F-5418-24**	**F-5518-24**
30"	18"	**F-5418-30**	**F-5518-30**
36"	18"	**F-5418-36**	**F-5518-36**
42"	18"	**F-5418-42**	**F-5518-42**
48"	18"	**F-5418-48**	**F-5518-48**
54"	18"	**F-5418-54**	**F-5518-54**
60"	18"	**F-5418-60**	**F-5518-60**
66"	18"	**F-5418-66**	**F-5518-66**
72"	18"	**F-5418-72**	**F-5518-72**
24"	24"	**F-5424-24**	**F-5524-24**
30"	24"	**F-5424-30**	**F-5524-30**
36"	24"	**F-5424-36**	**F-5524-36**
42"	24"	**F-5424-42**	**F-5524-42**
48"	24"	**F-5424-48**	**F-5524-48**
54"	24"	**F-5424-54**	**F-5524-54**
60"	24"	**F-5424-60**	**F-5524-60**
66"	24"	**F-5424-66**	**F-5524-66**
72"	24"	**F-5424-72**	**F-5524-72**
24"	30"	**F-5430-24**	**F-5530-24**
30"	30"	**F-5430-30**	**F-5530-30**
36"	30"	**F-5430-36**	**F-5530-36**
42"	30"	**F-5430-42**	**F-5530-42**
48"	30"	**F-5430-48**	**F-5530-48**
54"	30"	**F-5430-54**	**F-5530-54**
60"	30"	**F-5430-60**	**F-5530-60**
66"	30"	**F-5430-66**	**F-5530-66**
72"	30"	**F-5430-72**	**F-5530-72**

Tackboards, Markerboards and Pegboards may be attached to Modules using either Hanging Rails or Hanging Brackets.

Order Brackets or Rails separately.

Hanging Brackets

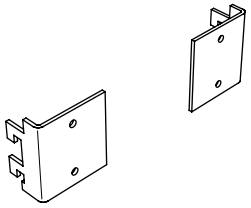

	Part Number
1 pair	**F47M020103N**

Hanging Brackets are designed to attach Tackboards, Marker-boards, and other lightweight accessories to the slots on the Module Uprights. Furnished in pairs.

Hanging Rails

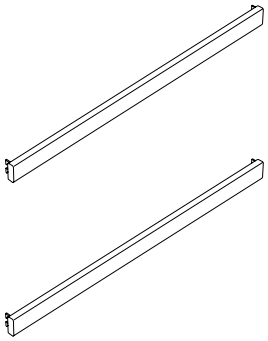

Length	Part Number	
24"	**F49M020124N**	1 pair
30"	**F49M020130N**	1 pair
36"	**F49M020136N**	1 pair
42"	**F49M020142N**	1 pair
48"	**F49M020148N**	1 pair
54"	**F49M020154N**	1 pair
60"	**F49M020160N**	1 pair
66"	**F49M020166N**	1 pair
72"	**F49M020172N**	1 pair

Laboratory Pegboards

Kemresin Laboratory Pegboards

Kemresin Pegboards are 1" thick and available in the sizes listed below. The number of supplied pegs is listed per size. Kemresin pegboards are supplied exclusively with standard polypropylene pegs measuring ½" dia. × 6⅛" L.

Peg Specification Note: Custom or non-standard peg lengths, styles, or attachment methods are not available and cannot be accommodated through special requests or pricing.

- At the end of the base part number, peg color will be selected by choosing **-PEGWH** = white or **-PEGBK** = black.
- After peg color, Kemresin color will be selected by choosing **BK** = Black, **GR** = Grey, **PT** = Putty, **SL**= Slate.
- Kemresin pegboards can also be ordered with Kemresin Drip Troughs and/or Finished Backs.

Example: PBDR180124-**PEGBKBK** is a 18" x 24" Black Kemresin Pegboard with Black Pegs

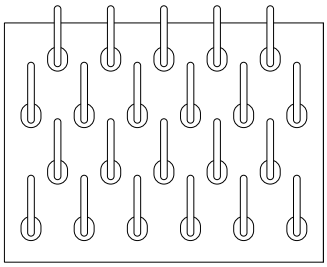

18" High	Length	Qty Pegs
PBDR180124-PEG_ _ _ _	24"L	22
24" High		
PBDR240124-PEG_ _ _ _	24"L	28
PBDR240130-PEG_ _ _ _	30"L	35
PBDR240136-PEG_ _ _ _	36"L	43
30" High		
PBDR300124-PEG_ _ _ _	24"L	39
PBDR300130-PEG_ _ _ _	30"L	49
PBDR300136-PEG_ _ _ _	36"L	60
PBDR300142-PEG_ _ _ _	42"L	70
PBDR300148-PEG_ _ _ _	48"L	81
36" High		
PBDR360124-PEG_ _ _ _	24"L	44
PBDR360130-PEG_ _ _ _	30"L	56
PBDR360136-PEG_ _ _ _	36"L	68
PBDR360142-PEG_ _ _ _	42"L	80
PBDR360148-PEG_ _ _ _	48"L	92

Type 304 Stainless Steel Laboratory Pegboards

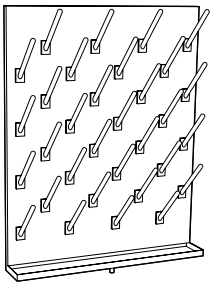

Pegboard without Drip Trough
30" High x ¾" Thick x 24" Long

X-020008 with Open Back
X-020010 with Finished Back

Peg Size: ½" diameter x 6" long
Peg Material: Polypropylene
Peg Color: White
Number of Pegs: 32

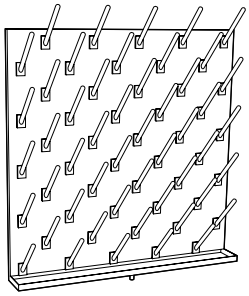

Pegboard without Drip Trough
30" High x ¾" Thick x 30" Long

X-020009 with Open Back
X-020011 with Finished Back

Peg Size: ½" diameter x 6" long
Peg Material: Polypropylene
Peg Color: White
Number of Pegs: 50

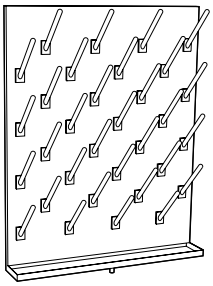

Pegboard with Drip Trough
30" High x ¾" Thick x 24" Long

X-020004 with Open Back
X-020006 with Finished Back

Peg Size: ½" diameter x 6" long
Peg Material: Polypropylene
Peg Color: White
Number of Pegs: 32

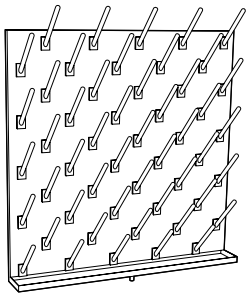

Pegboard with Drip Trough
30" High x ¾" Thick x 30" Long

X-020009 with Open Back
X-020011 with Finished Back

Peg Size: ½" diameter x 6" long
Peg Material: Polypropylene
Peg Color: White
Number of Pegs: 50

Miscellaneous Accessories

Kemresin Balance Table

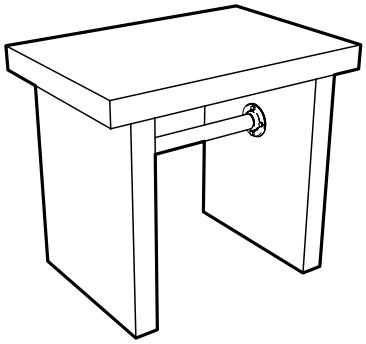

30" High x 24" Deep x 35" Long

K7R302435-BK	**Black Kemresin**
K7R302435-GR	**Grey Kemresin**
K7R302435-PT	**Putty Kemresin**
K7R302435-SL	**Slate Kemresin**

Worktop: 2" Thick Kemresin
Worktop Size: 2" Thick x 24" Deep x 35" Long
Pedestal Legs: 2" Thick Kemresin
Total Weight: 300 pounds

Gillis Stainless Steel Cart

F-5349-00 **33 ⅜" High x 19" Deep x 31" Long**

Shelf Size: (3) 18" Deep x 27" Long
(1" high lip on 3 sides of top & middle shelf)
Capacity: 400 pounds
Casters: (4) Black rubber – 4" Diameter – Swivel

Technical Information

Load Ratings – Assembly Load Maximums

12" Island Module Assembly.....3400 lbs.
Includes two Cantilevered Frames with or without Suspended Cabinets at 600 lbs. total each and any combination of shelves, suspended upper cabinets and service tunnels.
(Load must be balanced)

6" Partition Module Assembly.....2800 lbs.
Includes two Cantilevered Frames with or without Suspended Cabinets at 600 lbs. total each and any combination of shelves and/or suspended upper cabinets.
(Load must be balanced)

9" Wall Module Assembly .....2600 lbs.
Includes Cantilevered Frame, Suspended Cabinet and any combination of shelves, and suspended upper cabinets.

3" Wall Module Assembly .....2600 lbs.
Includes Cantilevered Frame, Suspended Cabinet and any combination of shelves, and suspended upper cabinets .

Wall Hanging System (per pair of Vertical Uprights)**.....2000 lbs.**
Includes Cantilevered Frame with or without Suspended Cabinets at 600 lbs. total and any combination of shelves and/or suspended upper cabinets.
(Frame must be firmly attached to the building structure)

Alpha Column Assembly .....2800 lbs.
Includes Leg Supported Frame with or without Suspended Cabinets at 1000 lbs. total and any combination of shelves and/or suspended upper cabinets.

Alpha System Cart ..... 600 lbs.
Includes Cantilevered Frame with or without Suspended Cabinets at 200 lbs. total and any combination of shelves and/or suspended upper cabinets.

Heavy Duty Alpha System Cart.....3000 lbs.
Includes Bottom Shelf at 2000 lbs., (2) Half-Length Cantilevered Frames with or without Suspended Cabinets at 600 lbs. total and any combination of shelves and/or suspended upper cabinets.

KEWAUNEE

Technical Information

Load Ratings – Component Load Maximums

Structural Modules

3" Wall Module Ledge	500 lbs.
9" Wall Module Ledge	500 lbs.
12" Island Module Ledge	500 lbs.
12" Island Module Ledge	500 lbs.
Top of 3" Wall Upper Carrier	500 lbs.
Top of 9" Wall Upper Carrier	500 lbs.
Top of 12" Island Upper Carrier	500 lbs.
Top of 12" Island Upper Carrier	500 lbs.

Alpha System Cart	900 lbs.
Heavy Duty Alpha System Cart	3000 lbs.

Adjustable Shelving

Module Core Shelves	200 lbs.
Module Top Shelves	200 lbs.
Module Shelves	
6"	200 lbs.
9"	200 lbs.
12"	200 lbs.
15"	200 lbs.
18"	200 lbs.
21"	200 lbs.
24"	200 lbs.

Worksurface Frames

Cantilevered Frames – 23" deep	600 lbs.
with Support Angle & Base Cabinet	1700 lbs.
Cantilevered Frames – 29" deep	600 lbs.
Cantilevered Frames – with Down Leg	1000 lbs.
Alpha Column Frame – 23" deep	1000 lbs.
Alpha Column Frame – 29" deep	1000 lbs.
Elevation Table Frame	600 lbs.
Adjustable Height Table Frame	1000 lbs.

Suspended Cabinets

Base Cabinets	350 lbs.
Suspended Drawers – Steel	150 lbs.
Suspended Drawers – Wood	100 lbs.
Pullboards	50 lbs.
Keyboard Tray	25 lbs.
Upper Cabinets	350 lbs.

Floor Mounted Cabinets

Base Cabinets (per lineal foot)	500 lbs.
Cabinet drawer (each) - Steel	150 lbs.
Cabinet drawer (each) - Wood	100 lbs.

- Maximum load ratings refer to live loads and include loads applied to top of Worksurface and shelves, as well as total weight of suspended cabinetry and accessories.
- Island Module Assembly load maximums are based on assembly being attached to 4" concrete floor using Hex Head, ½" x 4", Lok-Bolts. (www.powers.com)
- Partition Module Assembly load maximums are based on assembly being attached to ceiling and to 4" concrete floor using Hex Head, ½" x 4", Lok-Bolts. (www.powers.com)
- Wall Module Assembly load maximums are based on assembly being attached to walls with blocking at appropriate heights, using fasteners capable of withstanding applied load.
- Wall Hanging System load maximums are based on assembly being attached to walls with blocking at appropriate heights, using fasteners capable of withstanding applied load.
- Maximum load ratings are based on load being evenly distributed along the entire length of the assembly or component.

Technical Information

Load Ratings — Alpha System Carts

Alpha System Cart Load Rating

Maximum Total Live Load = 600 pounds

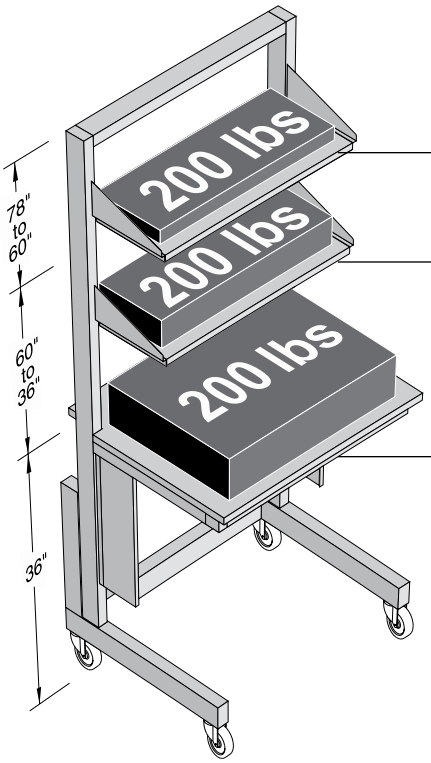

Adjustable Module Shelf
200 pounds maximum

Adjustable Module Shelf
200 pounds maximum

Cantilevered Frame & Worksurface Top
or Shelf below 36" above floor
200 pounds Total Maximum

SEFA 10	Class **8**	Configuration **1**	Category **1**

Heavy Duty Alpha System Carts

Maximum Total Live Load = 3000 pounds

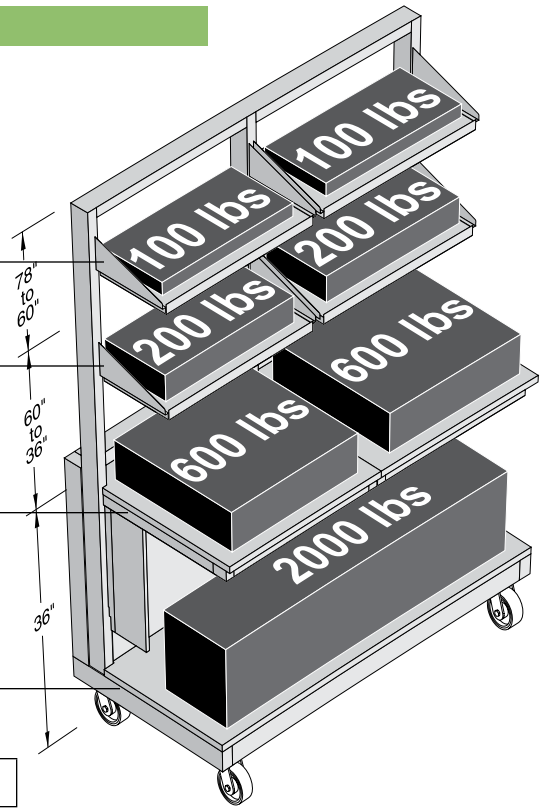

Adjustable Module Shelf
60" above floor
100 pounds maximum (each shelf)

Adjustable Module Shelf
between 36" and 60" above floor
200 pounds maximum (each shelf)

Cantilevered Frame & Worksurface Top
below 40" above floor
600 pounds maximum (each top)

Bottom Shelf
2000 pounds maximum

SEFA 10	Class **8**	Configuration **1**	Category **4**

KEWAUNEE

Technical Information

Load Ratings – 6" Partition Module Assemblies & 6" Alpha Columns

6" Partition Module with 23" & 29" Deep Worksurface Frame

Maximum
Total Live Load = 2800 pounds
(Load must be balanced)

Anchored to Ceiling

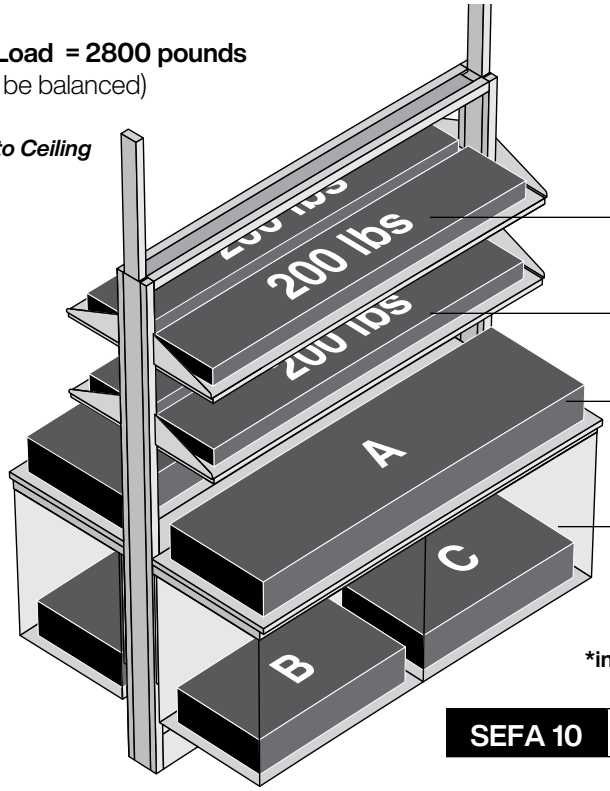

Adjustable Module Shelf
200 pounds maximum (each shelf)

Adjustable Module Shelf
200 pounds maximum (each shelf)

Cantilevered Frame & Worksurface Top
600 pounds Total Maximum (each side)
includes weight of Base Cabinet and contents

Suspended Base Cabinet

A+B*+C* = 600 lbs
MAXIMUM
*includes weight of Base Cabinet and contents

SEFA 10	Class **5**	Configuration **2**	Category **2**

Anchored to Floor

Alph Column Bench with 23" & 26" Leg-Supported Worksurface

Maximum Total Live Load = 2800 pounds

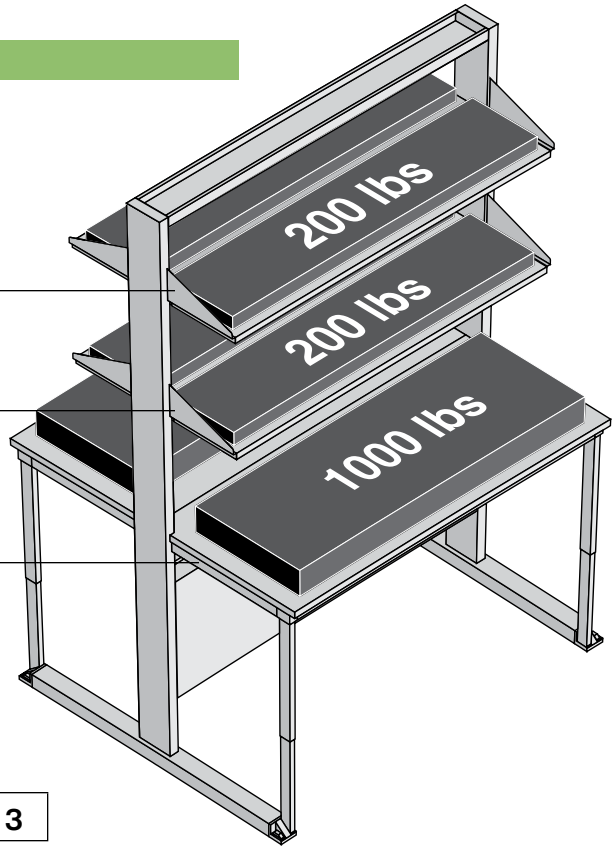

Adjustable Module Shelf
200 pounds maximum (each shelf)

Adjustable Module Shelf
200 pounds maximum (each shelf)

Leg-Supported Frame & Worksurface Top
1000 pounds Total Maximum (per side)

SEFA 10	Class **7**	Configuration **4**	Category **3**

Technical Information

Load Ratings – 12" Island Module Assemblies

With Suspended Cabinets

Maximum Total Live Load = 3400 pounds
(Load must be balanced)

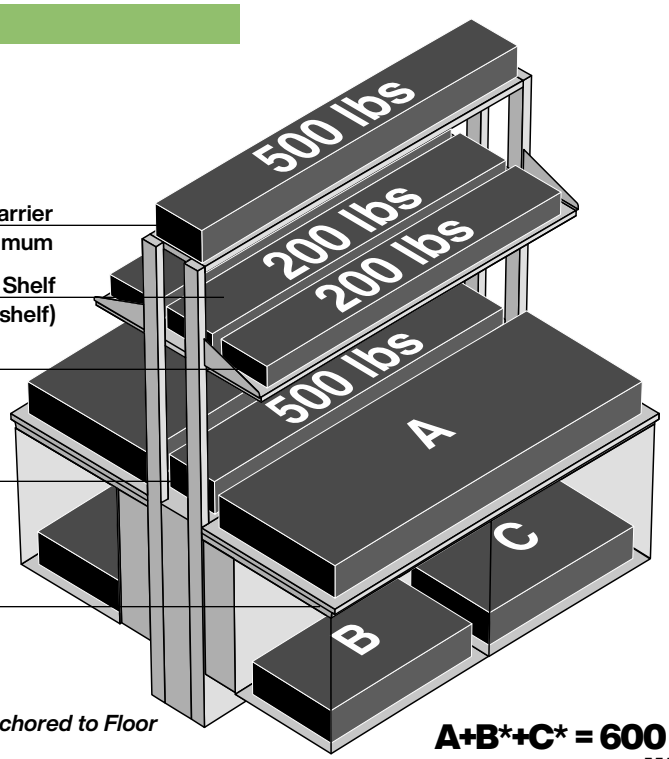

Top of Upper Carrier
500 pounds maximum

Module Core Shelf
200 pounds maximum (each shelf)

Adjustable Module Shelf
200 pounds maximum (each shelf)

Module Ledge
500 pounds maximum

Cantilevered Frame & Worksurface Top
600 pounds Total Maximum
includes weight of Base Cabinet and contents

Anchored to Floor

A+B*+C* = 600 lbs MAXIMUM

*includes weight of Base Cabinet and contents

SEFA 10	Class **4**	Configuration **2**	Category **2**

Without Suspended Cabinets

Maximum Total Live Load = 3400 pounds
(Load must be balanced)

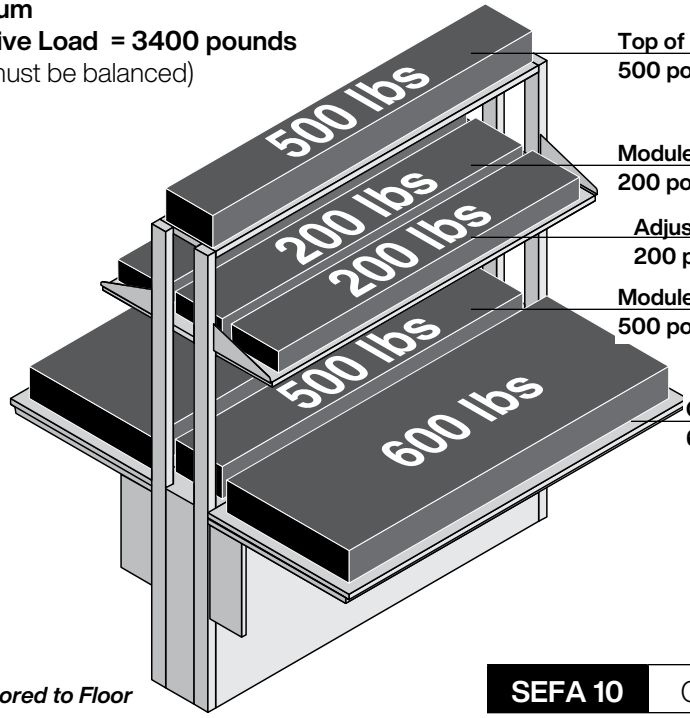

Top of Upper Carrier
500 pounds maximum

Module Core Shelf
200 pounds maximum (each shelf)

Adjustable Module Shelf
200 pounds maximum (each shelf)

Module Ledge
500 pounds maximum

Cantilevered Frame & Worksurface Top
600 pounds maximum

Anchored to Floor

SEFA 10	Class **4**	Configuration **2**	Category **2**

KEWAUNEE

Technical Information

Load Ratings – Wall Module Assemblies

9" Wall Module Assembly with Catilevered Worksurface

Maximum Total Live Load = 2600 pounds

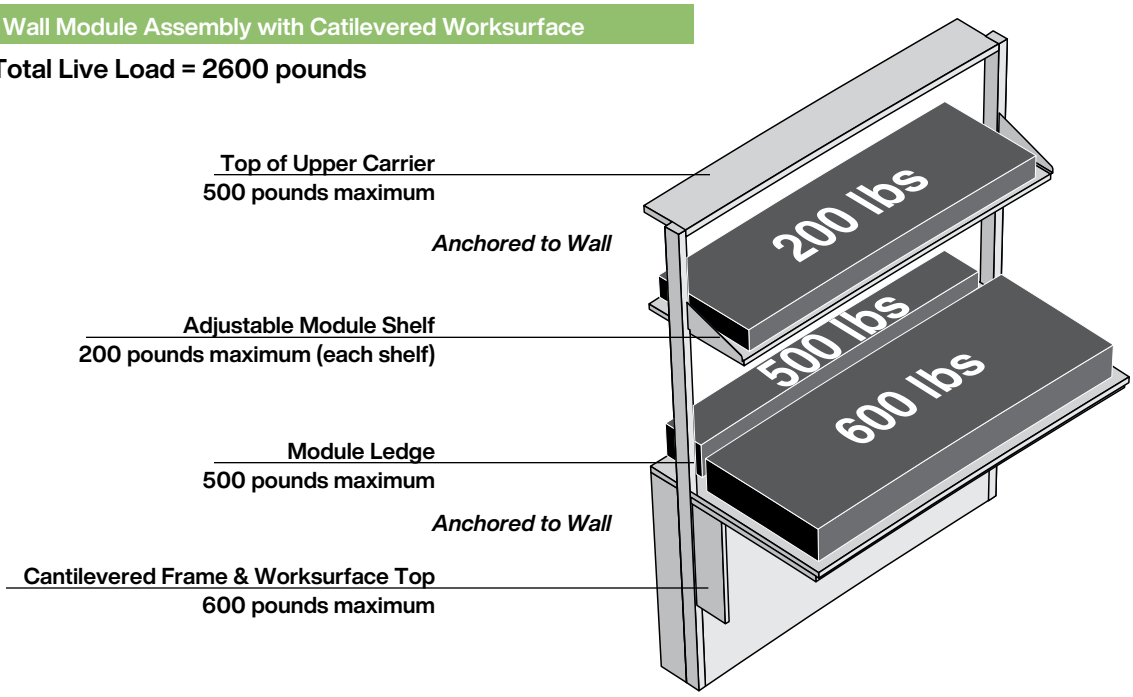

SEFA 10	Class **4**	Configuration **1**	Category **2**

3" Wall Module Assembly with Catilevered Worksurface

Maximum Total Live Load = 2600 pounds

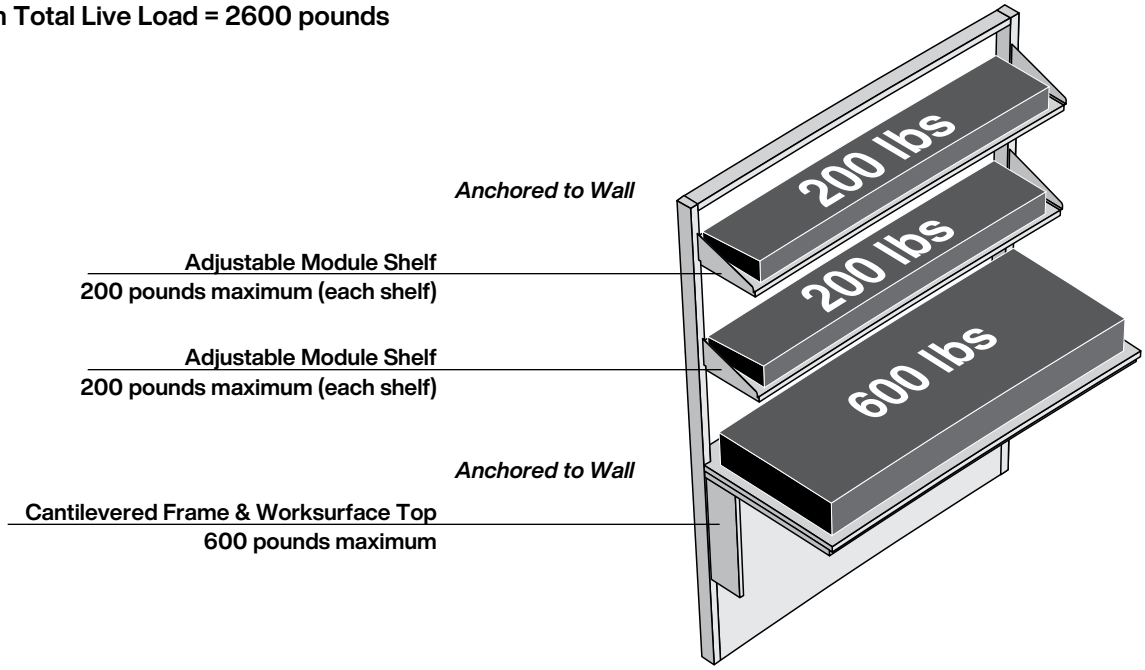

SEFA 10	Class **5**	Configuration **1**	Category **2**

Technical Information

Load Ratings – Wall Hanging System

Wall Hanging System with 23" & 29" Deep Worksurface Frame

Maximum Total Live Load = 2000 pounds

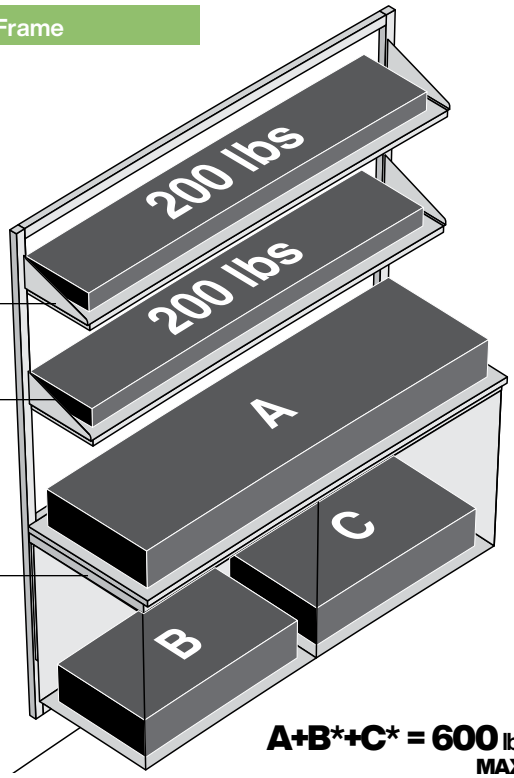

Anchored to Wall

Adjustable Module Shelf
200 pounds maximum (each shelf)

Adjustable Module Shelf
200 pounds maximum (each shelf)

Anchored to Wall

Cantilevered Frame & Worksurface Top
600 pounds Total Maximum
includes weight of Base Cabinet and contents

Anchored to Wall

A+B*+C* = 600 lbs MAXIMUM

*includes weight of Base Cabinet and contents
*includes weight of Base Cabinet and contents

SEFA 10	Class **2**	Configuration **1**	Category **2**

KEWAUNEE

Technical Information

Dimensional Information — Structural Module

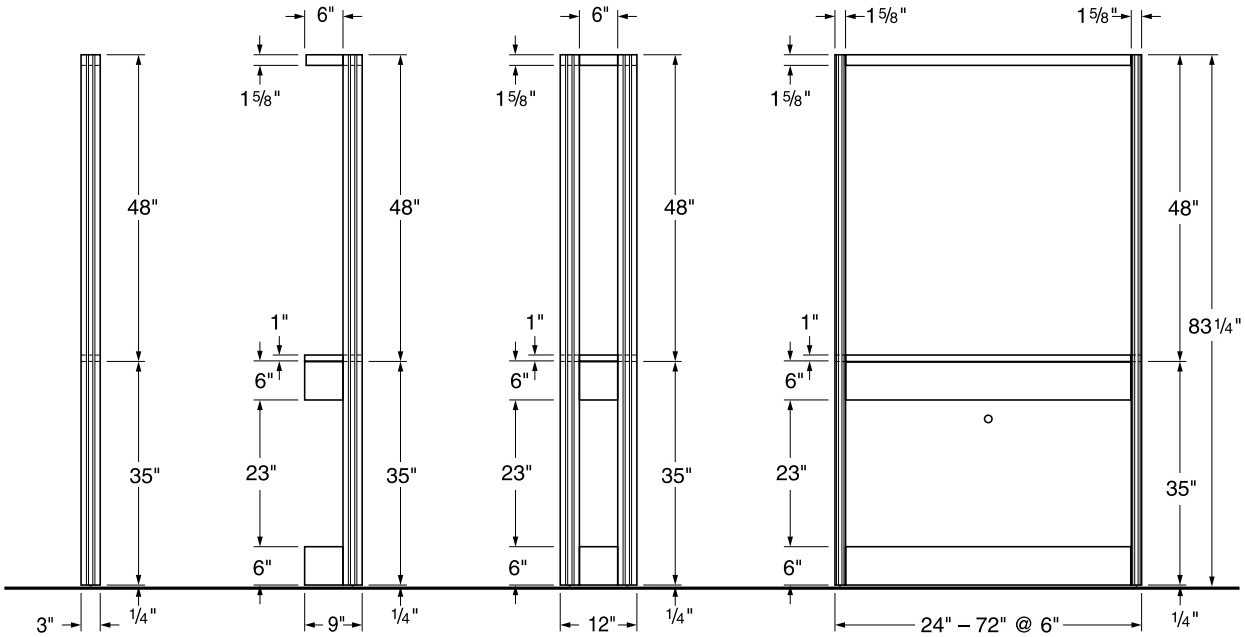

3" Wall Module 9" Wall Module 12" Island Module

End Elevation **Front Elevation**

Dimensional Information — Service Riser Module

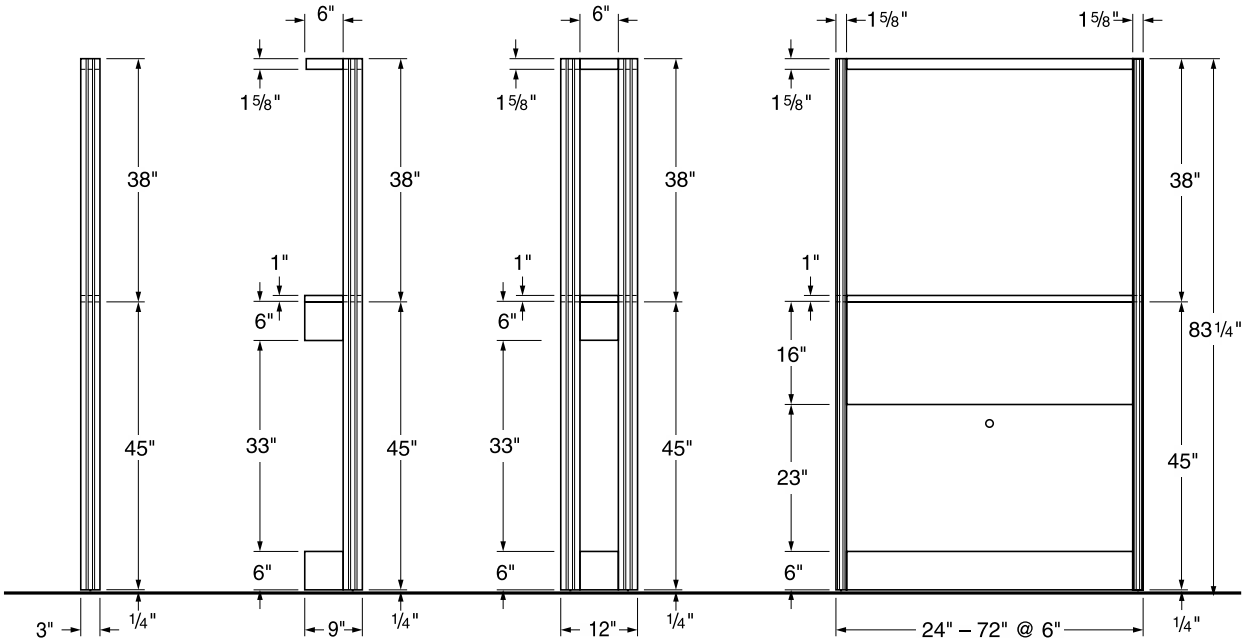

3" Wall Module 9" Wall Module 12" Island Module

End Elevation **Front Elevation**

Technical Information

Dimensional Information — Structural Partition Module

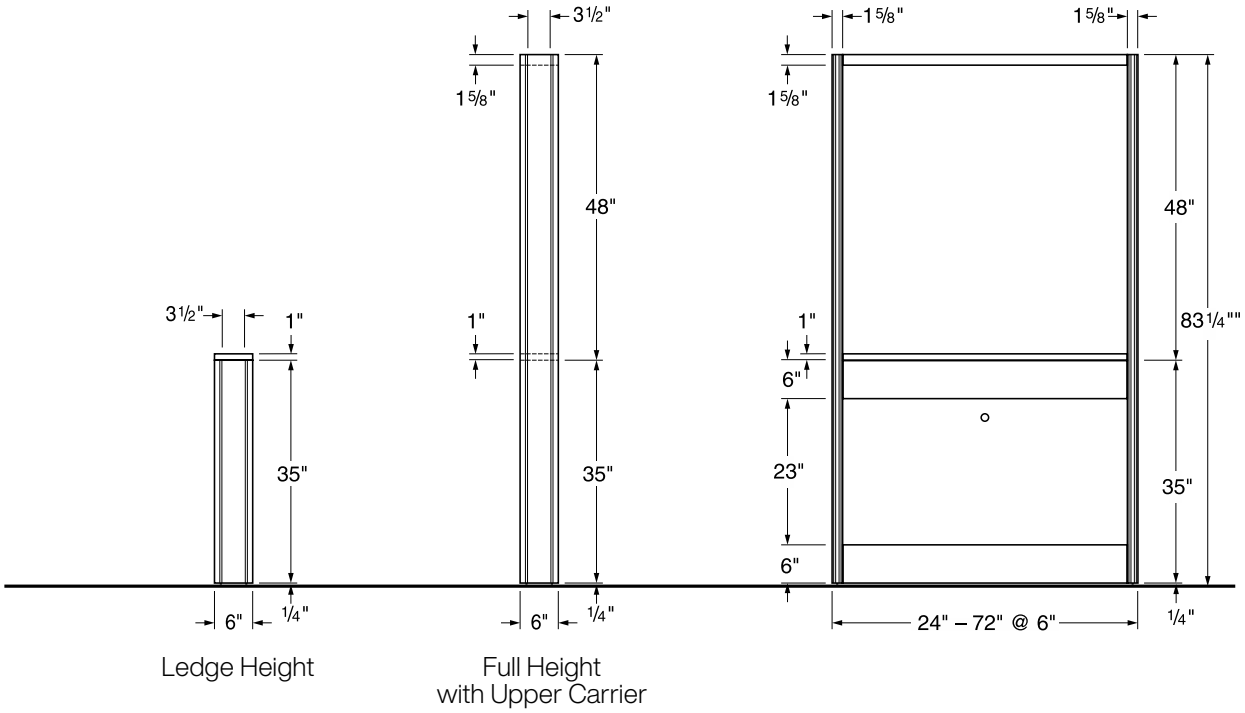

End Elevation **Front Elevation**

Dimensional Information — Service Riser Partition Module

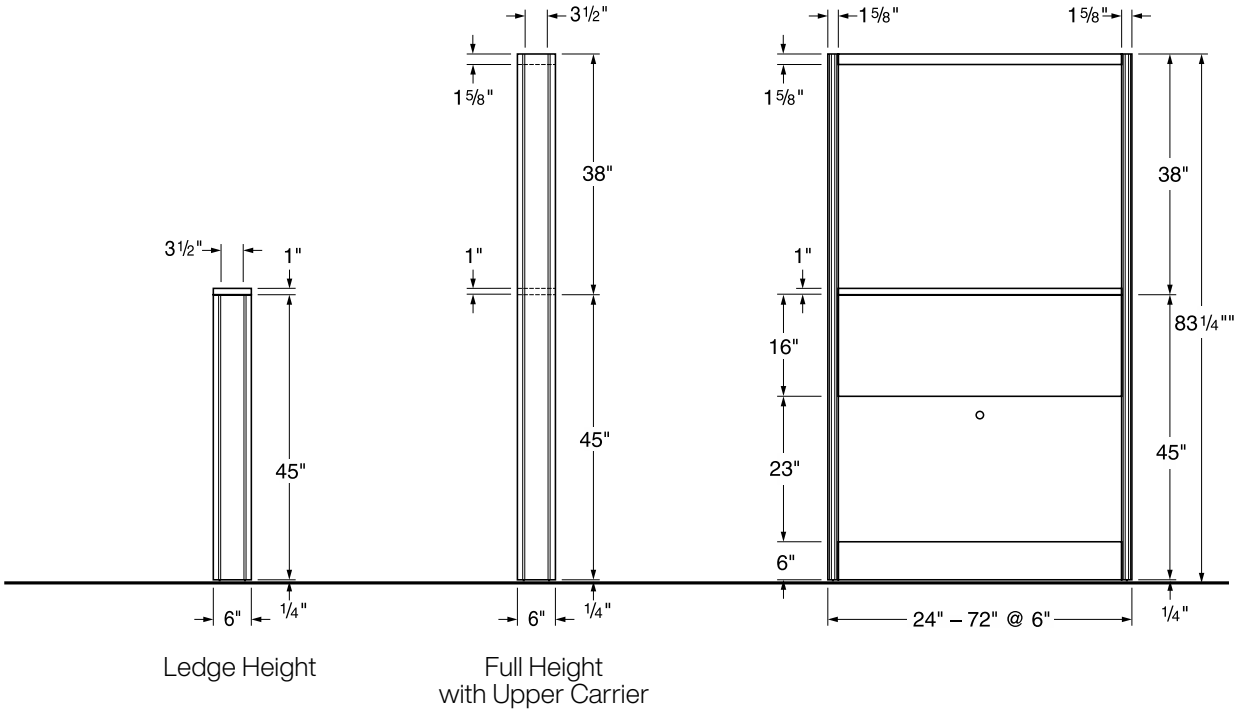

End Elevation **Front Elevation**

KEWAUNEE

Technical Information

Dimensional Information — Full Height Wall Hanging System

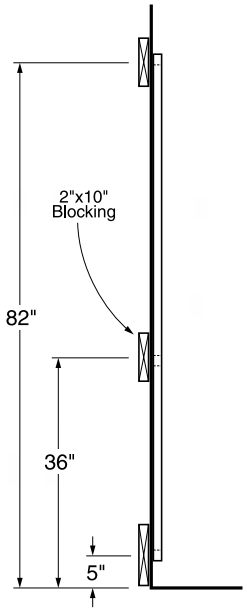

Blocking Detail

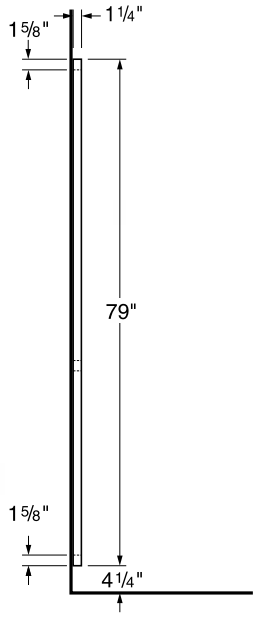

End Elevation

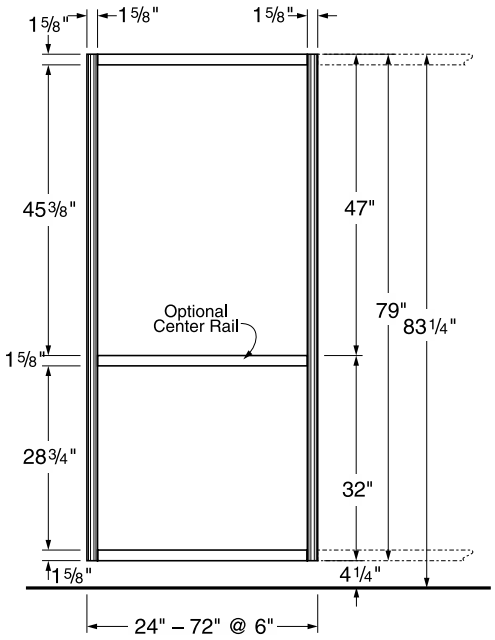

Front Elevation

Dimensional Information — Above Counter Wall Hanging System

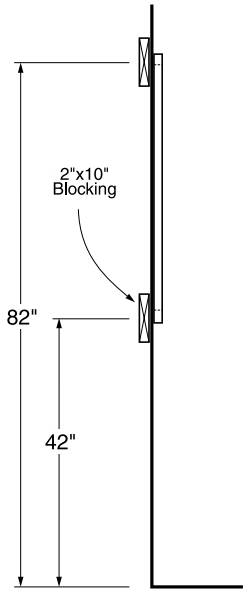

Blocking Detail

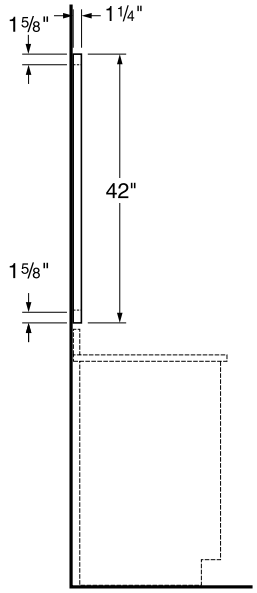

End Elevation

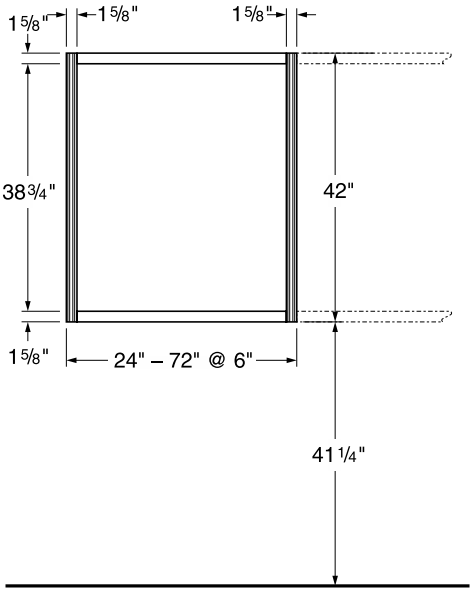

Front Elevation

Technical Information

Dimensional Information — Worksurface Frames and Tops

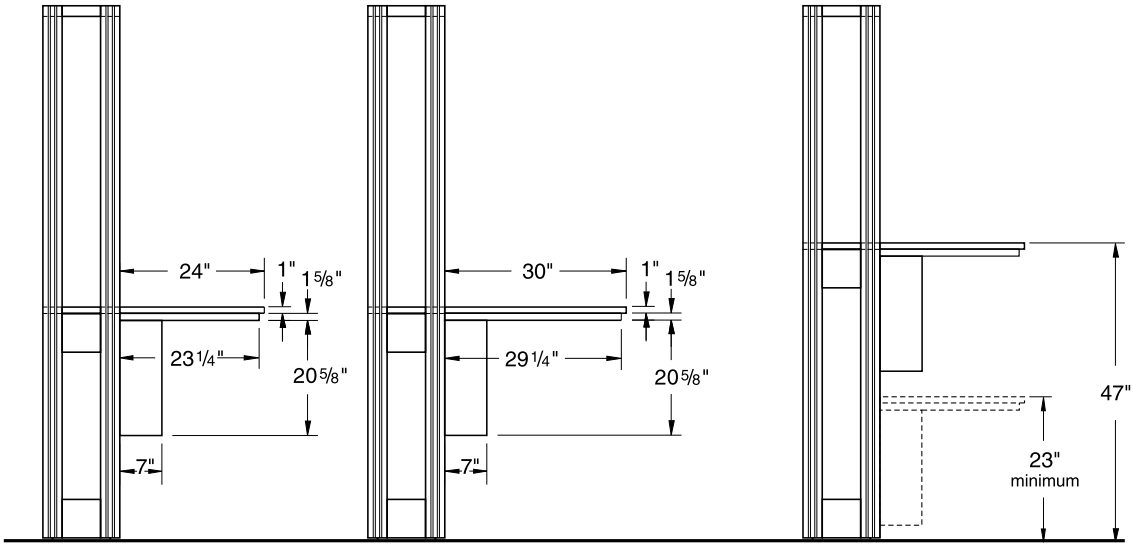

24" Worksurface **30" Worksurface** **Height Adjustment**

Dimensional Information — Wall Blocking Locations

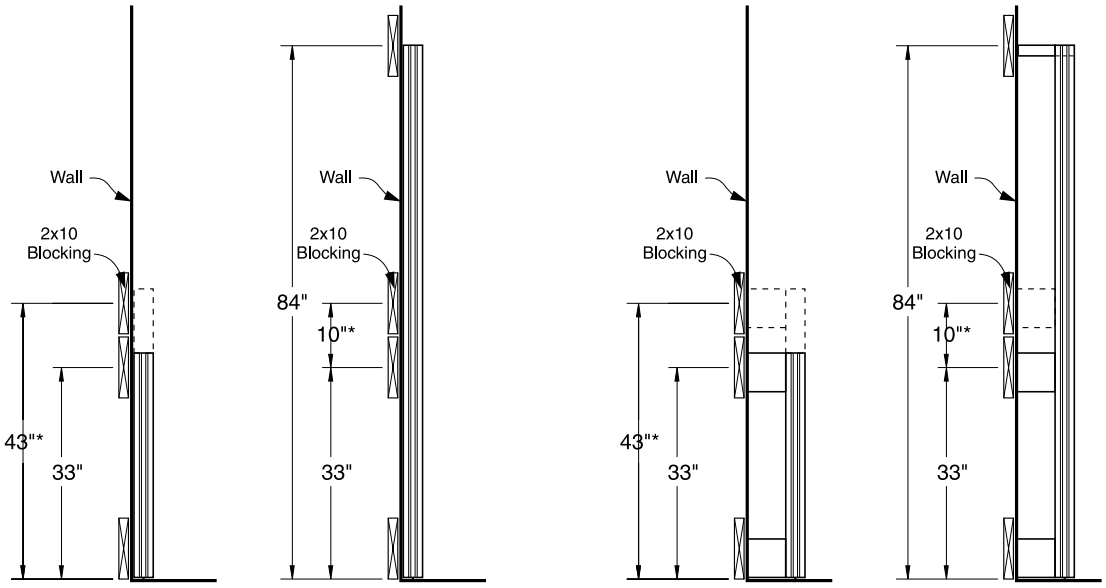

* Blocking required at 43" for Service Riser Module – 33" for Standard Structural Module

3" Wall Module **9" Wall Module**

KEWAUNEE

Technical Information

Dimensional Information — Typical 6" Partition Assemblies using Floor Mounted Cabinets

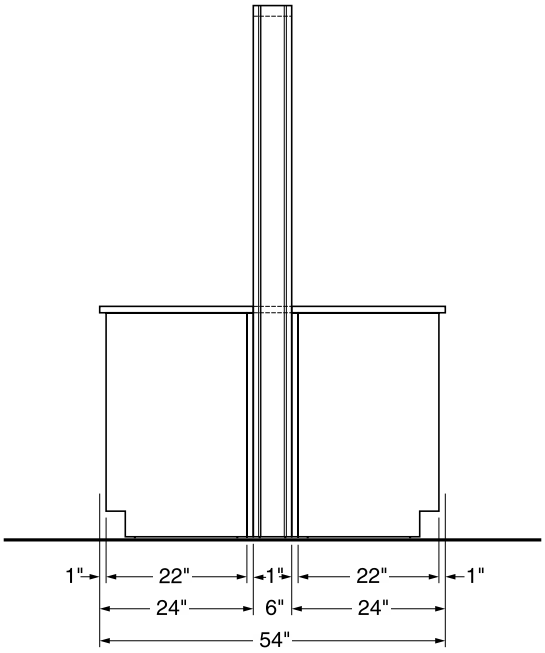

24" Worksurface Top

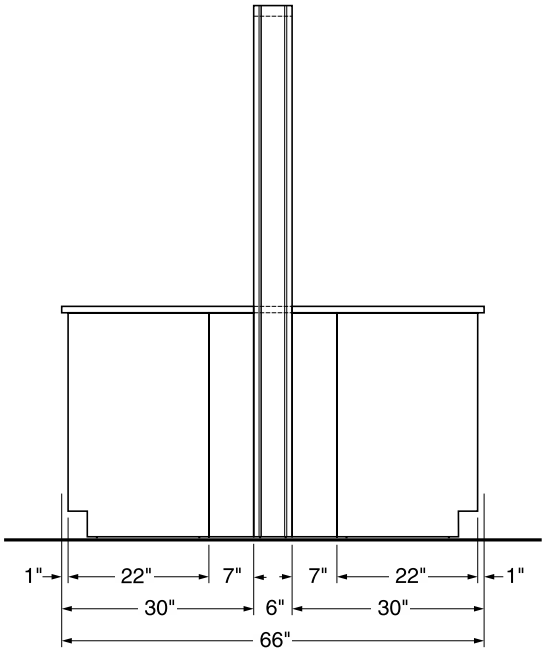

30" Worksurface Top

Dimensional Information — Typical 12" Island Assemblies using Floor Mounted Cabinets

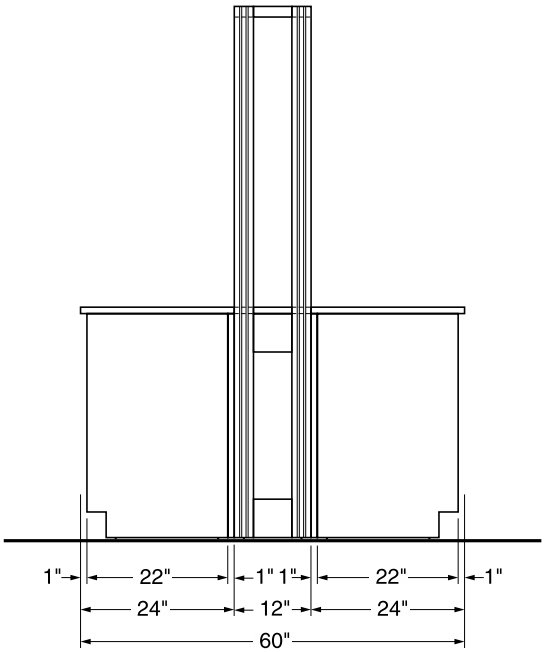

24" Worksurface Top

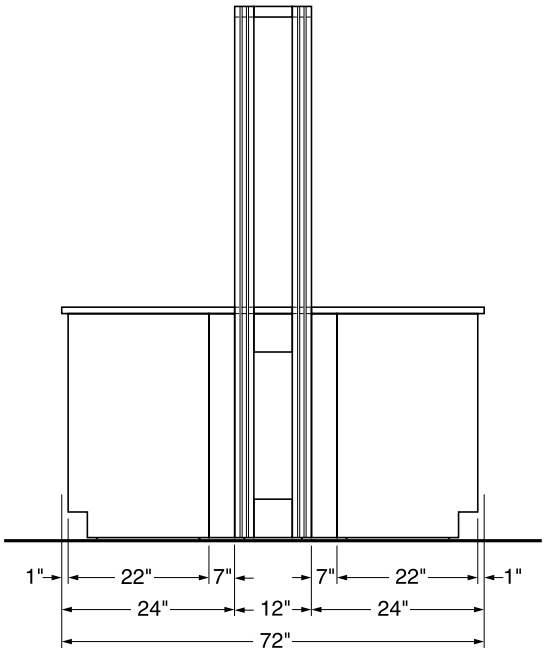

30" Worksurface Top

Technical Information

Dimensional Information — Suspended Cabinets and Adjustable Module Shelves

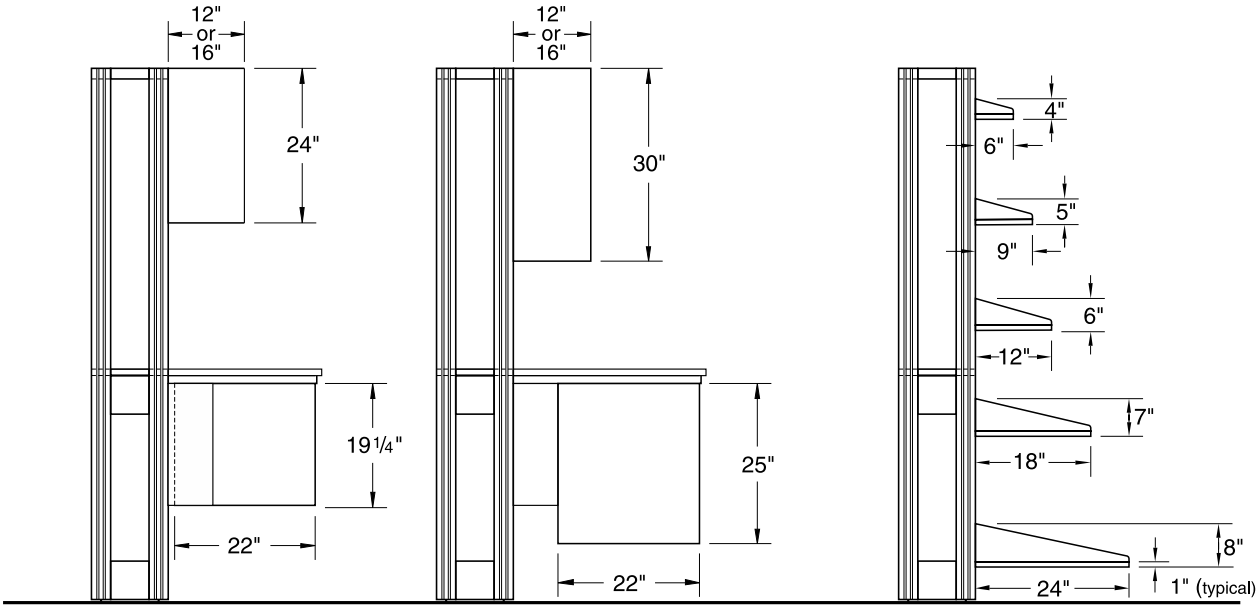

Suspended Cabinets

Adjustable Module Shelves

Dimensional Information — Alpha Columns

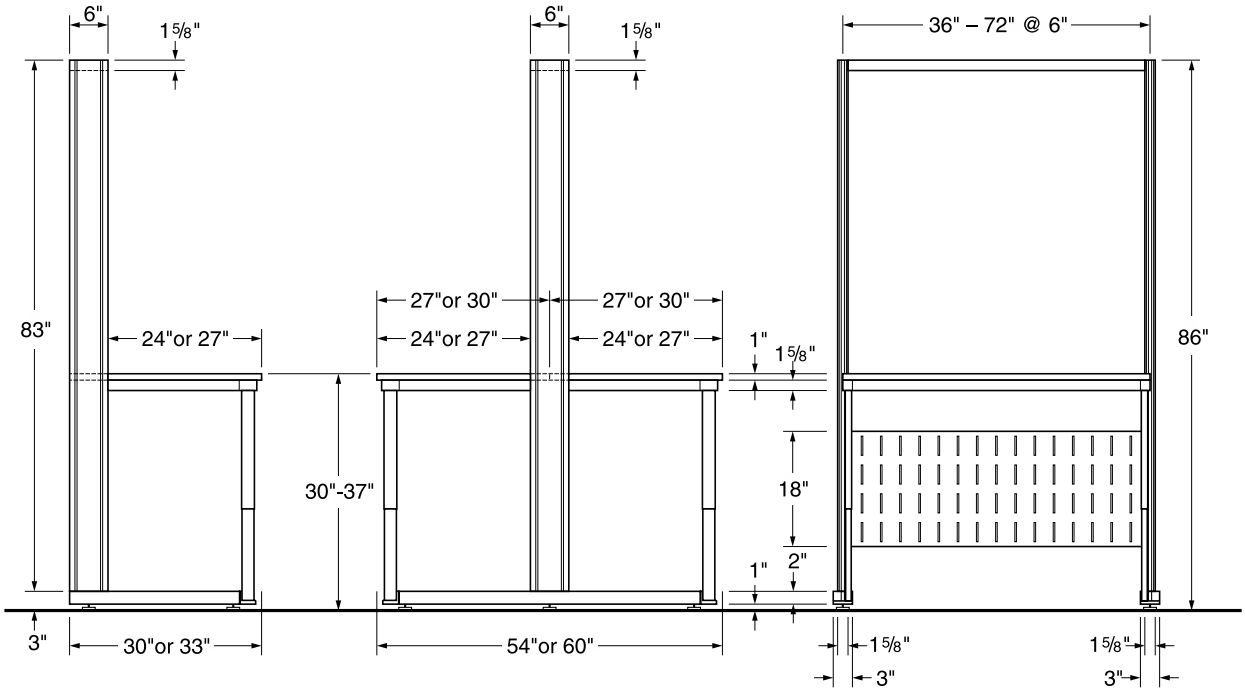

End Elevations

Front Elevation

KEWAUNEE

Technical Information

Dimensional Information — Alpha System Carts

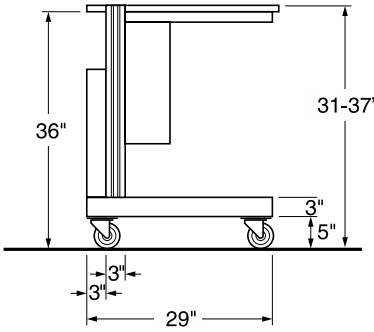

Alpha System Cart

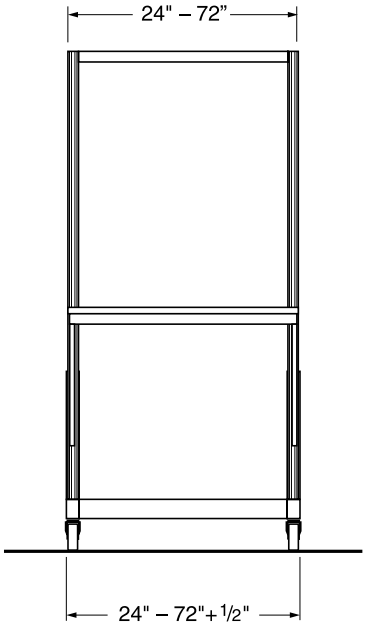

Cart Width

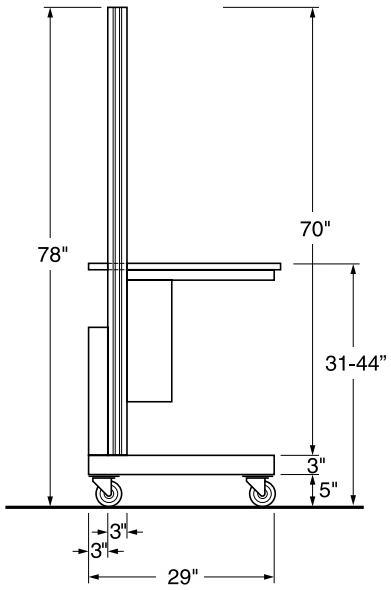

Cart with Upper Carrier

Dimensional Information — Heavy Duty Alpha System Carts

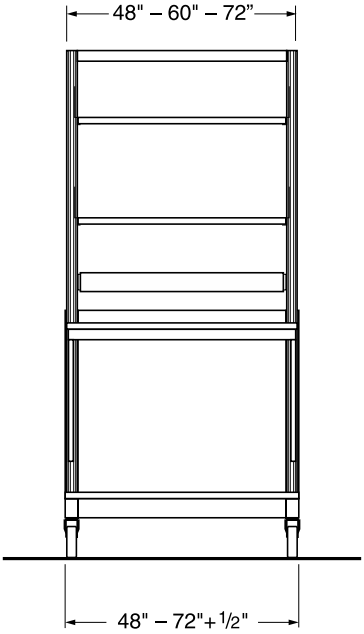

Front Elevation

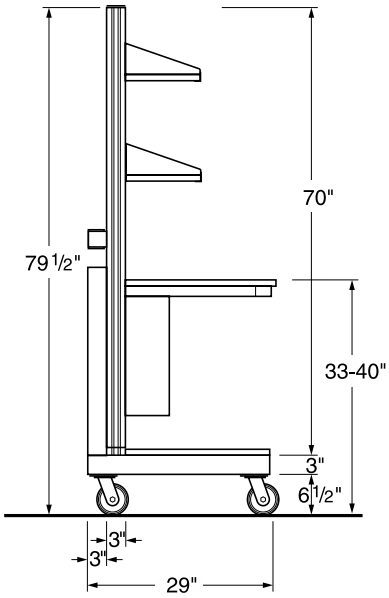

End Elevation

Technical Information

Dimensional Information — Service Enclosure

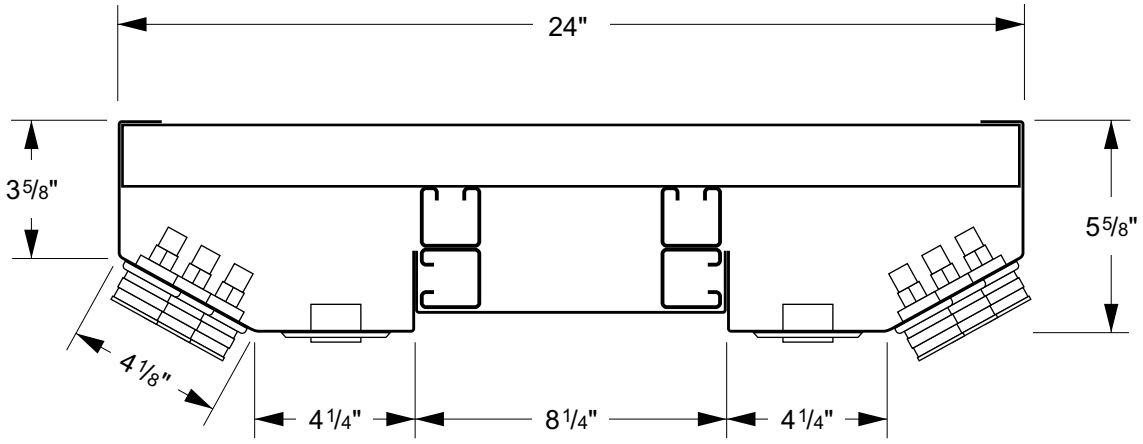

Typical Service Enclosure Section View

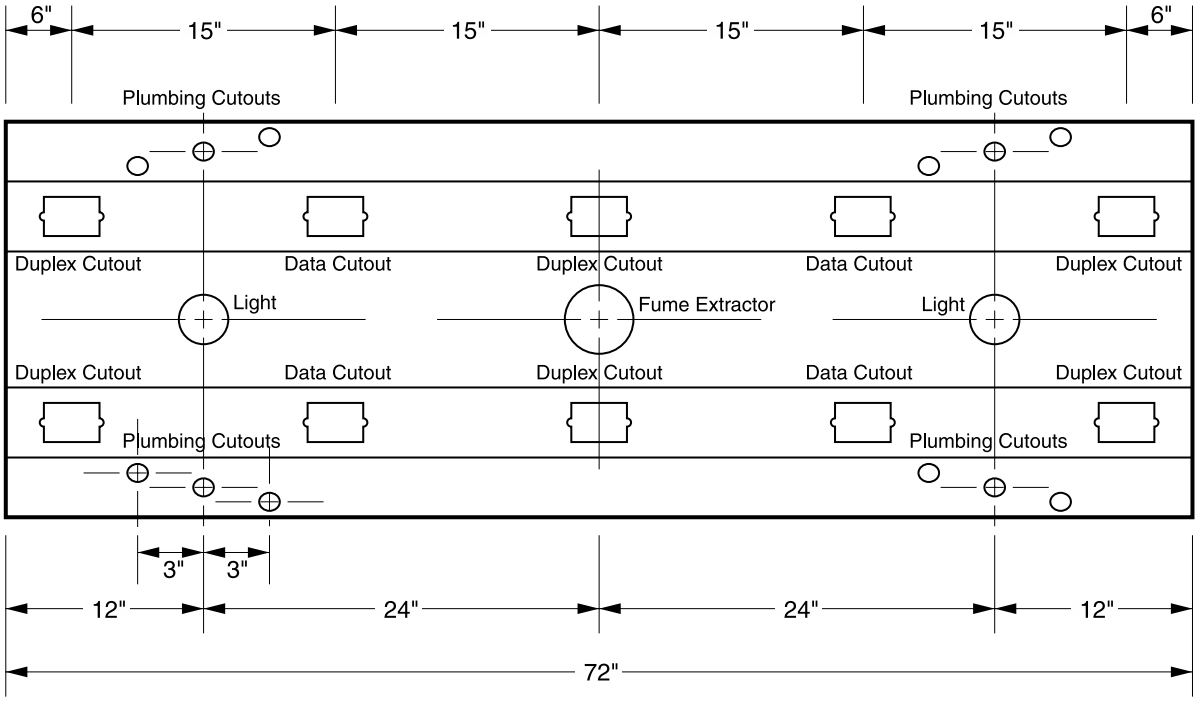

Typical Service Enclosure Plan View Layout

KEWAUNEE

Technical Information

Planning & Design Information — Service Enclosure

Recommended Supply Line Pressures

Gas ..... 0.216 psi
Air (Ordinary) ..... 15 psi
Air (Air Powered Stirrer Operation) ..... 40 psi
Vacuum (Ordinary) ..... 18"-22" of Mercury
Vacuum (High) ..... 28.5" of Mercury
Hot or Cold Water ..... Local Pressure
Steam (Low Pressure) ..... 0-15 psi as required
Steam (High Pressure) ..... 15-30 psi as required

Service & Rough-In Abbreviations

A	Air	V	Vacuum
E	Electric-120 VAC	CW	Cold Water
G	Gas	DW	Distilled Water
N	Nitrogen	HV	Hood Vent
O	Oxygen	HW	Hot Water
S	Steam	WV	Waste Vent

Recommended Pipe Size and Material

Service	Number of Outlets	Pipe Size	Pipe Material
STEAM	1-8 9-16 17-24	⅜" ½" ¾"	In accordance with governing codes
WATER	1-10 11-18 19-24	½" ¾" 1"	Hard Drawn Type L Copper Tubing
GAS	1-12 12-18 19-24	⅜" ½" ¾"	In accordance with governing codes
AIR or VACUUM	1-8 9-16 17-24	⅜" ½" ¾"	Hard Drawn Type L Copper Tubing

Designing Your Service Enclosure

The following points should be used as guidelines in designing your Service Enclosure

Contact local plumbing, electrical, or mechanical contractor or engineer to be sure of meeting all local codes and regulations.

General Options

- Plumbing, Electrical, Data, and Mechanical cutouts and fittings are provided per specifications and drawing based on needs of individual projects.
- Service Enclosures are available up to 10 ft. in length in a single section. Multiple sections may be combined for longer lengths.

Plumbing Service Options:

- Service Enclosures may be pre-plumbed for single point of connection.
- Pre-plumbed servcie lines are cleaned, tested and capped unless otherwise specified.
- Specify piping material to meet local codes.

Electrical Service Options:

- Pre-wiring available for single point connection.
- UL listing availabe when factory pre-wired and specified.
- Specify NEMA configurations.
- Specify type and quantity of circuits and terminations.

Data Channel Options:

- Specify data outlet types required. Wiring is by others.

Light and Fume Extraction Support Enclosure Options:

- Contact factory for lighting options.
- Contact factory for Fume Extraction options and airflow requirements.
- Custom sized Service Enclosures are available.

KEWAUNEE

Typical Installations

KEWAUNEE

Typical Installations

ALPHA

Flexible Systems

Kewaunee Scientific Corporation is dedicated to manufacturing high quality products for the laboratory marketplace. We offer **Total Laboratory Solutions, Innovative Designs, and Technological Expertise** with a worldwide distribution network to provide laboratories that are truly World Class.

Laboratory Products from Kewaunee®:

ALPHA® – Adaptable Casework System

ALPHA Columns – Expandable Workstations

ALPHA Overhead Carrier Systems

BasikBench® – Simple 4-Leg Benches or Tables

Element Bench – Efficient Benches with Plumbed Posts

Enterprise® – Free-Standing Workstations

Evolution® – Column Based Workstations

Kemresin® – Epoxy Resin Counters & Sinks

Kewaunee Matrix® – Educational Stations

Research Collection® – Steel Casework

Signature® Series – Wood Casework

Supreme Air® – Fume Hoods

For our complete product offering, specifications, catalogs, brochures, case studies, and dealer list, go to kewaunee.com, or contact your local sales representative directly.

Kewaunee Scientific Corporation
P.O. Box 1842 ▪ Statesville, NC 28687-1842
704-873-7202 ▪ kscmarketing@kewaunee.com ▪ kewaunee.com

Kewaunee Labway India Pvt. Ltd.
No. CA-9A, 2nd Floor, Jigani Link Road
Jigani, Bangalore 562 106, India
Phone: 9180-27826725 ▪ Fax: 9180-27826724
Web Site: kewaunee.in

Kewaunee Labway Asia Pte. Ltd.
194 Pandan Loop, #06-22
Pantech Business Hub, Singapore 128 383
Phone: 65-6773-0288 ▪ Fax: 65-6773-2322

Kewaunee, Alpha, BasikBench, Enterprise, Evolution, Kemresin, Kewaunee Matrix, Research Collection, Signature, and Supreme Air are registered trademarks of Kewaunee Scientific Corporation

KEWAUNEE®

© Copyright 2026

Digital Version 03/04/26