Protector® **Echo**™ & **Airo**™ Filtered Fume Hoods

LABCONCO®

CSi Canadian Scientific
The Future of Laboratory Design

Table of Contents

Why Labconco? 3

Fume Hoods At-a-Glance
- Steps to Selecting a Filtered Fume Hood 4
- Labconco Product Lines 5

Filtered Fume Hoods
- Cost Savings & Energy Footprint Comparison 6
- Echo™ & Airo™ Features & Benefits 7
- Echo™ Benchtop Ordering Information 8
- Airo™ Benchtop Ordering Information 9
- Echo™ Floor-Mounted Ordering Information 10
- Echo™ & Airo™ Benchtop Dimensional Data 11
- Echo™ Floor-Mounted Dimensional Data 12

Work Surfaces 13

GreenFumeHood® Technology by Erlab
- Filtration Technology Features & Benefits 14
- Neutrodine® Unisorb Filters 15

Accessories & Filters 16

Specifications
- Echo™ and Airo™ Benchtop Filtered Fume Hoods 17
- Echo™ Floor-Mounted Filtered Fume Hoods 18

Why Labconco?

Energy efficient.

With the need for energy-efficiency ever increasing, finding a fume hood that meets your eco-friendly goals can be difficult. Why exhaust precious air when Labconco has the ideal ductless solution? With Labconco's filtered fume hoods, you get all the benefits of a ducted fume hood without the burden of high HVAC costs.

Eco-friendly.

Labconco's Echo and Airo hoods utilize Neutrodine® Unisorb filtration technology from Erlab® to capture over 700 different chemicals. Harmful chemicals are captured in the filters, and clean air is the result. Safe for you, safe for the environment.

Flexibility.

We make filtered hoods in a multitude of sizes. Fully-featured, containment-enhancing models in benchtop, floor-mounted and compact formats - all free of ductwork. With the Echo and Airo, gaining flexibility doesn't mean sacrificing safety, quality or performance.

Labconco. No duct, no doubt.

LABCONCO®

Labconco Fume Hoods

Steps to Selecting a Fume Hood

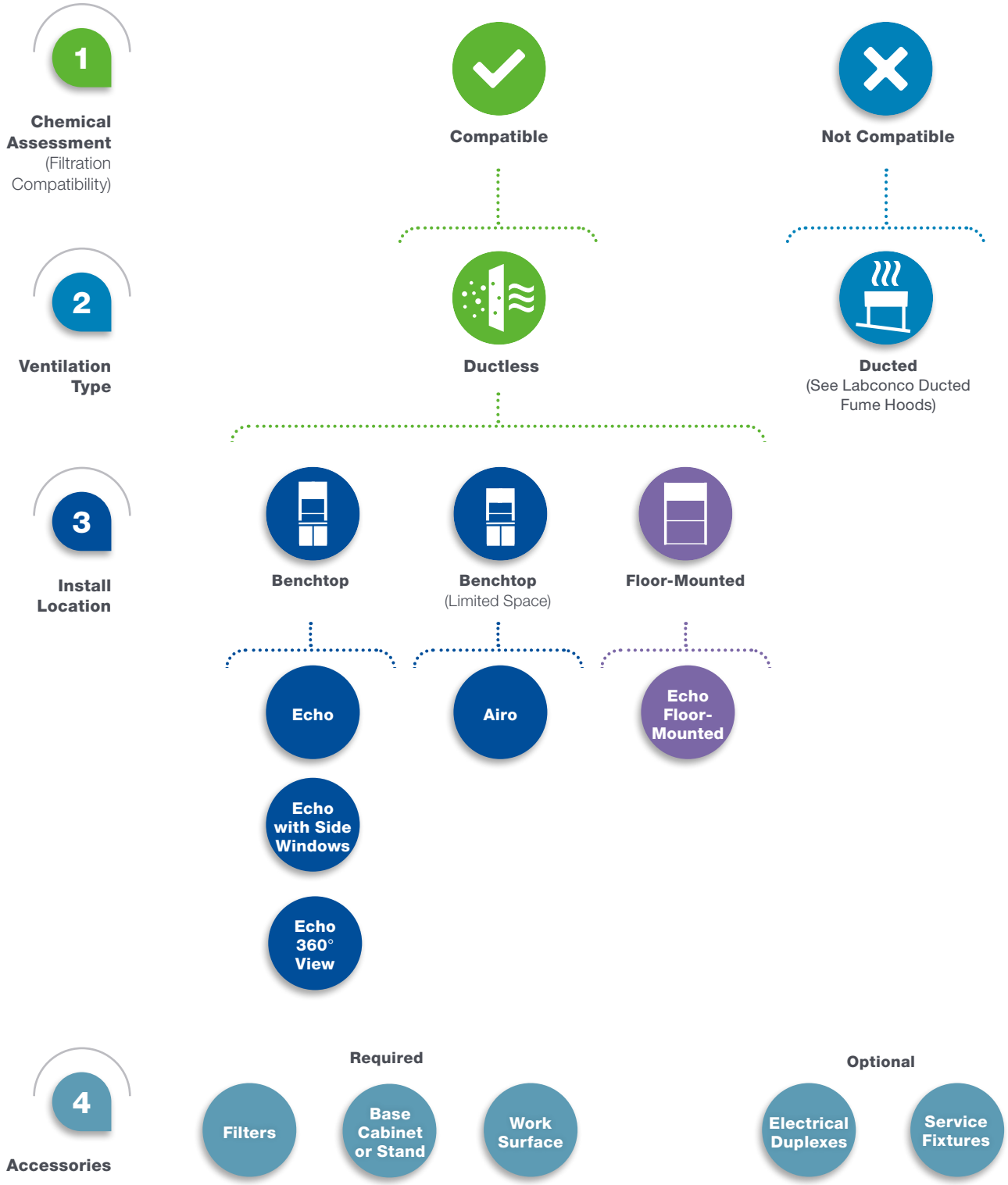

Labconco Fume Hoods

Labconco Product Lines

Ductless Filtered Fume Hoods

Echo
DH III with Neutrodine® Unisorb Filter

Airo
DH III with Neutrodine® Unisorb Filter

Echo with Side Windows

Echo 360° View

Echo Floor-Mounted

Accessories

Filters

Base Cabinet or Stand

Work Surface

Energy Footprint & Cost Savings Comparison

Filtered fume hood infrastructure

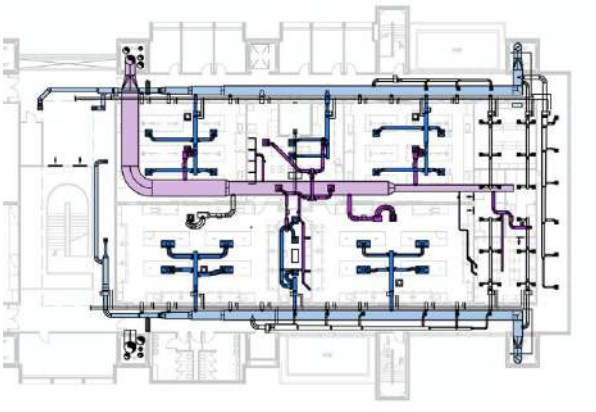

Traditional fume hood infrastructure

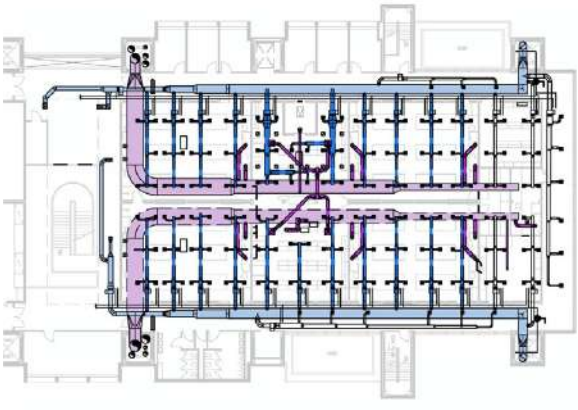

Supply air
Exhaust air

Filtered fume hoods do not exhaust air from the lab, which greatly simplifies the complexity of the HV/AC system required to support the lab space(s) where these hoods are placed. Eliminating supply/exhaust air requirements associated with traditional fume hoods drastically reduces the costs of the lab's mechanical system requirements, providing tremendous savings back to the lab.

Traditional fume hoods require a complex HV/AC infrastructure comprised of supply and exhaust ductwork and expensive air handling systems. Buildings with multiple fume hoods 'ganged' together often utilize Variable Air Volume (VAV) airflow control systems, which have a high up-front cost along with yearly maintenance fees. The end result is a complex, expensive system required for the support of traditional fume hoods.

Cost Comparison: Filtered vs. Traditional Ducted

	Echo Filtered Fume Hood	Constant Volume By-Pass (CV)	Variable Air Volume (VAV)
6' Benchtop Fume Hood with vertical-rising sash	$30,000	$14,500	$14,500
Building Infrastructure: M-E-P, Lab Services & Data	$8,520	$20,000	$25,000
Total Initial, One-Time Costs	**$38,520**	**$34,500**	**$39,500**
Exhaust Fans	$293	$1,367	$911
Make-up Air ($8/cfm)	$0	$9,600	$6,400
Maintenance Costs/Year	$1,800	$1,200	$1,500
Total Operating & Maintenance Costs/Year	**$2,093**	**$12,167**	**$8,811**

*Contact Labconco for a cost-savings analysis for your ventilation project.

Echo™ and **Airo**™ Filtered Fume Hoods

Features & Benefits

Energy savings
Reduces HVAC costs by eliminating need for make-up air.

Eco-friendly
Carbon filters trap chemicals from being exhausted into the atmosphere.

Easy to install
No ductwork is required. Quick start-up with simple 5-step install.

Maximum containment
All the safety of a ducted hood without the ductwork.

Flexible installation
May be placed anywhere in a facility with minimal setup. Allows for installation in flex spaces or temporary labs.

Restricted By-Pass
Reduces energy usage and increases safety.

Small and large sizes
Fits any space or application needs. Floor-mounted hoods available for applications with a large apparatus.

DH III filtration setup
For ensured safety, backup filter has the same retention potential as the main filter.

High Heat Application
Filtered hoods have shown robust heat tolerance from hot plates, ovens, or heat-generating equipment up to 300-degrees C surface temperature.

Smart Command Control Module

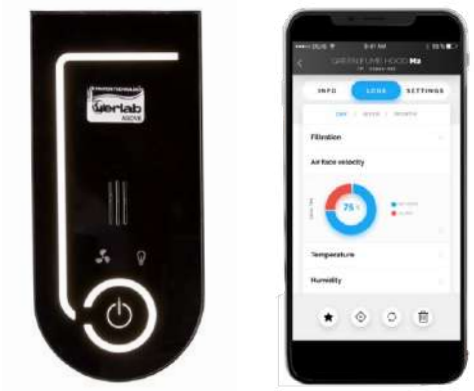

Smart Command
Sleek, easy to use interface integrates with filtration technology to monitor performance and maintain safety.

Smartphone connection
For access to advanced functions and data via free eGuard software.

Smart alert
Communicates performance changes through visual and audible signals.

Filter monitoring
For at-a-glance updates to filter status.

Energy saver

*U.S. Patent No. 6,461,233

Echo™ Benchtop Filtered Fume Hoods

Ordering Information

Catalog Number Configurator Use this key to configure the nine digit catalog number.

1 8 ☐ ☐ 1 0 ☐ ☐ ☐

Select the **WALL CONFIGURATION** for your fume hood. This is the third digit.

0 = Solid walls, no windows
1 = Side windows
2 = Side and back windows

Select the **WIDTH** of your fume hood. This is the fourth digit. Shipping weight is noted for models without windows. Add 30 lbs. (14 kg) for models with side windows. Add 40 lbs. (18 kg) for models with side and back windows.

4 = 4', 530 lbs. (240 kg)
5 = 5', 655 lbs. (297 kg)
6 = 6', 745 lbs. (338 kg)
8 = 8', 985 lbs. (447 kg)

Select the **SENSOR PACKAGE** for your fume hood. This is the seventh digit.

2 = Solvent sensor

4 = Solvent sensor + acid sensor

6 = Solvent sensor + formaldehyde sensor

8 = HEPA Filter only

Select the **ELECTRICAL CONFIGURATION, SERVICE FIXTURES** and **GFCI ELECTRICAL DUPLEX RECEPTACLE** for your fume hood. These are the eighth and ninth digits. Add 10 lbs. (5 kg) for models with service fixtures.

00 = 115V, 50/60 Hz, with 10A plug for North America
No service fixtures

01 = 115V, 50/60 Hz, with 10A plug for North America
Two service fixtures

02 = 115V, 50/60 Hz, with 10A plug for North America
Two service fixtures and GFCI Duplex*

20 = 230V, 50/60 Hz, with 5A plug for North America
No service fixtures

21 = 230V, 50/60 Hz, with 5A plug for North America
Two service fixtures

*Hoods with GFCI electrical duplex are rated at 20 amps. 8' Hoods have two GFCI electrical duplex receptacles, one mounted on each side, 20 amps each.

All models require (not included):

- Neutrodine® Unisorb filters (see pages 15-16)
- Work surface (see page 13)
- Base cabinet or stand (contact Labconco)

Hood Width	Hood Depth	
	Interior	Exterior
4'	31.3"	37.7"†
5'	31.3"	37.7"†
6'	31.3"	37.7"†
8'	31.3"	37.7"†

†38.1" depth on models with back window

Catalog number may vary pending LPQ chemical assessment analysis.

Airo™ Benchtop Filtered Fume Hoods

Ordering Information

Catalog Number Configurator Use this key to configure the nine digit catalog number.

1 8 4 ☐ ☐ 0 ☐ ☐ ☐

Select the **WIDTH** and **INTERIOR DEPTH** of your fume hood. These are the fourth and fifth digits. Shipping weights are shown.

30 = 3', 25.3" interior depth, 435 lbs. (197 kg)

31 = 3', 31.3" interior depth, 475 lbs. (215 kg)

41 = 4', 31.3" interior depth, 525 lbs (336 kg)

Select the **SENSOR PACKAGE** for your fume hood. This is the sevenith digit.

2 = Solvent sensor

4 = Solvent sensor + acid sensor

6 = Solvent sensor + formaldehyde sensor

8 = HEPA Filter only

Select the **ELECTRICAL CONFIGURATION, SERVICE FIXTURES** and **GFCI ELECTRICAL DUPLEX RECEPTACLE** for your fume hood. These are the eighth and ninth digits. Add 10 lbs. (5 kg) for models with service fixtures.

00 = 115V, 50/60 Hz, with 10A plug for North America
No service fixtures

01 = 115V, 50/60 Hz, with 10A plug for North America
Two service fixtures

02 = 115V, 50/60 Hz, with 10A plug for North America
Two service fixtures and GFCI Duplex

03= 115V, 50/60 Hz, with 10A plug for North America
No service fixtures and GFCI Duplex

20 = 230V, 50/60 Hz, with 5A plug for North America
No service fixtures

21 = 230V, 50/60 Hz, with 5A plug for North America
Two service fixtures

All models require (not included):

- Neutrodine® Unisorb filters (see pages 15-16)
- Work surface (see page 13)
- Base cabinet or stand (contact Labconco)

Hood Width	Hood Depth	
	Interior	Exterior
3'	25.3"	31.7"
3'	31.3"	37.7"
4'	31.3"	37.7"

Catalog number may vary pending LPQ chemical assessment analysis.

Echo™ Floor-Mounted Filtered Fume Hoods

Ordering Information

Catalog Number Configurator Use this key to configure the nine digit catalog number.

1 8 3 ☐ ☐ 7 ☐ ☐ ☐

Select the **WIDTH** of your fume hood. This is the fourth digit. Shipping weight is noted. Add 15 lbs. (7 kg) for 43.7" deep models and 30 lbs. for 55.7" deep models.

4 = 4', 740 lbs. (336 kg)
5 = 5', 970 lbs. (440 kg)
6 = 6', 1095 lbs. (497 kg)
8 = 8', 1435 lbs. (651 kg)

Select the **EXTERIOR DEPTH** of your fume hood. This is the fifth digit.

1 = 37.7" **2** = 43.7" **3** = 55.7"

Select the **SENSOR PACKAGE** for your fume hood. This is the sevenith digit.

2 = Solvent sensor

4 = Solvent sensor + acid sensor

6 = Solvent sensor + formaldehyde sensor

8 = HEPA Filter only

Select the **ELECTRICAL CONFIGURATION, SERVICE FIXTURES** and **GFCI ELECTRICAL DUPLEX RECEPTACLE** for your fume hood. These are the eighth and ninth digits. Add 10 lbs. (5 kg) for models with service fixtures.

00 = 115V, 50/60 Hz, with 10A plug for North America
No service fixtures

01 = 115V, 50/60 Hz, with 10A plug for North America
Two service fixtures

02 = 115V, 50/60 Hz, with 10A plug for North America
Two service fixtures and GFCI Duplex*

20 = 230V, 50/60 Hz, with 5A plug for North America
No service fixtures

21 = 230V, 50/60 Hz, with 5A plug for North America
Two service fixtures

*Hoods with GFCI electrical duplex are rated at 20 amps. 8' Hoods have two GFCI electrical duplex receptacles, one mounted on each side, 20 amps each.

All models require (not included):

- Neutrodine® Unisorb filters (see pages 15-16)

Exterior Depth	Interior Depth	
	Lower	Upper
37.7"	28.7"	29.7"
43.7"	34.7"	35.7"
55.7"	46.7"	47.7"

Contact Labconco for shipping dimensions for floor-mounted fume hoods.

Catalog number may vary pending LPQ chemical assessment analysis.

Echo™ and **Airo**™ Benchtop Filtered Fume Hoods

Dimensional Data

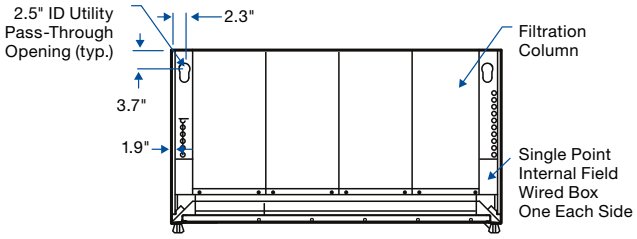

TOP (Echo Benchtop Hoods)

Echo	A	B
4'	48.0"	38.2"
5'	60.0"	50.2"
6'	72.0"	62.2"
8'	96.0"	86.2"

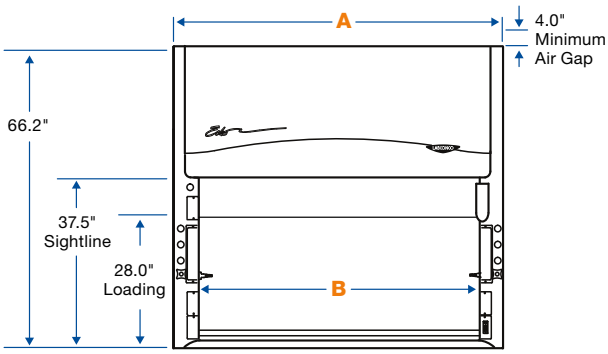

FRONT (Echo Benchtop Hoods)

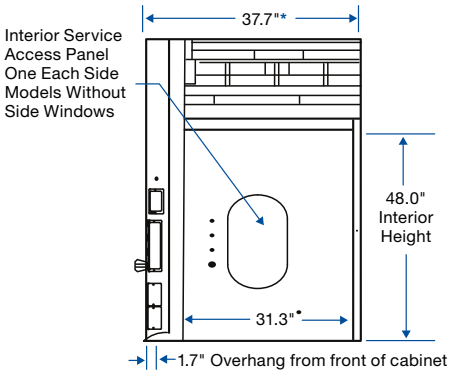

SIDE (Echo Benchtop Hoods)

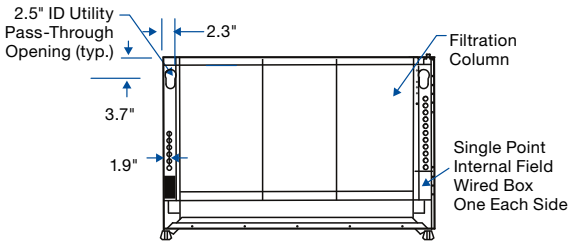

TOP (Airo Benchtop Hoods)

Airo	A	B	C	D
3'	36.0"	26.2"	31.7"	25.3"
3'	36.0"	26.2"	37.7"	31.3"
4'	48.0"	38.2"	37.7"	31.3"

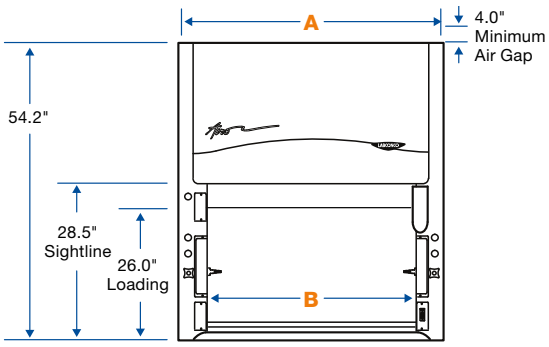

FRONT (Airo Benchtop Hoods)

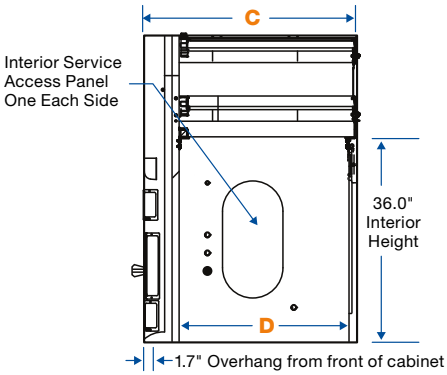

SIDE (Airo Benchtop Hoods)

*38.1" depth on models with back window

NOTE: HEPA filters add 3.5" to overall height.

Echo™ Floor-Mounted Fume Hoods

Dimensional Data

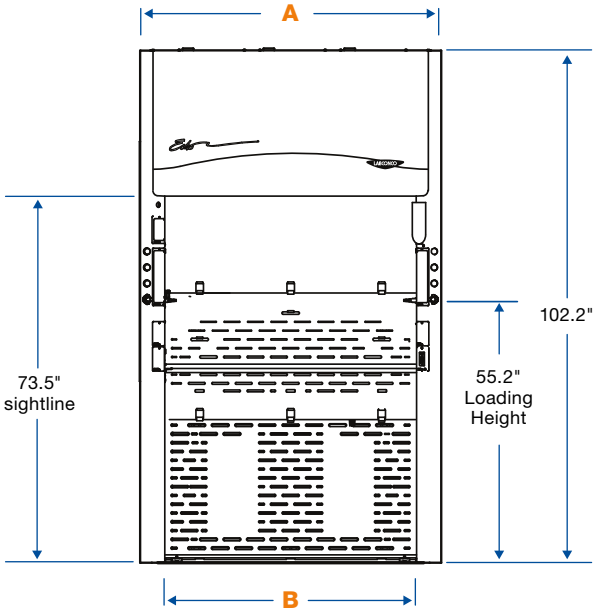

FRONT

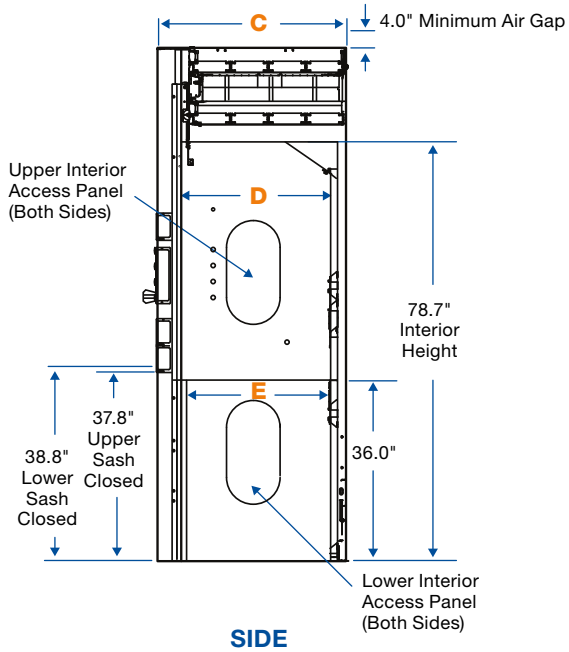

SIDE

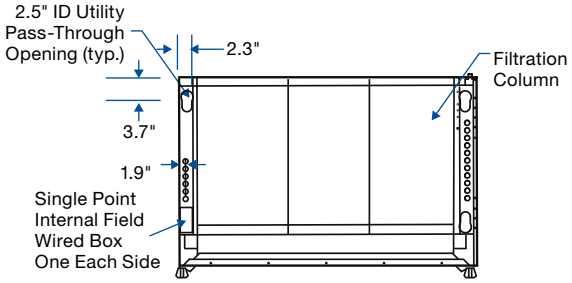

TOP

	A	B
4'	48.0"	38.2"
5'	60.0"	50.2"
6'	72.0"	62.2"
8'	96.0"	86.2"

C*	D	E
Exterior Depth	Upper Working Depth	Lower Working Depth
37.7"	29.7"	28.7"
43.7"	35.7"	34.7"
55.7"	47.7"	46.7"

*8' Vertical sash models will have an additional 0.63" of exterior depth.

Floor-mounted fume hoods are shipped partially unassembled (on 2-3 pallets) and require some field assembly (not provided by Labconco). Detailed instructions are available in the user's manual and upon request.

NOTE: HEPA filters add 3.5" to overall height.

SpillStopper™ Work Surfaces

Ordering Information & Dimensional Data

- Corrosion-resistant epoxy
- Dished and contoured
- Directs airflow into hood

Catalog Number Configurator

Use this key to configure the seven digit catalog number.

9 5 0 ☐ ☐ ☐ ☐

Select the **DEPTH** of your fume hood. This is the fourth digit.

0 = 31.7" d Airo models only

1 = 37.7" d Echo and Airo models

Select the **WIDTH** of your fume hood. This is the fifth digit. Work surface shipping weight is noted.

3 = 3', 90 lbs. (41 kg)
4 = 4', 120 lbs. (54 kg)
5 = 5', 160 lbs. (73 kg)
6 = 6', 220 lbs. (100 kg)
8 = 8', 250 lbs. (113 kg)

Select the **LEFT CUPSINK CUTOUT** option (cupsink sold separately). See dimensional drawing. This is the sixth digit.

0 = None **1** = Rear **2** = Side*

Select the **RIGHT CUPSINK CUTOUT** option (cupsink sold separately). See dimensional drawing. This is the seventh digit.

0 = None **1** = Rear **2** = Side*

TOP

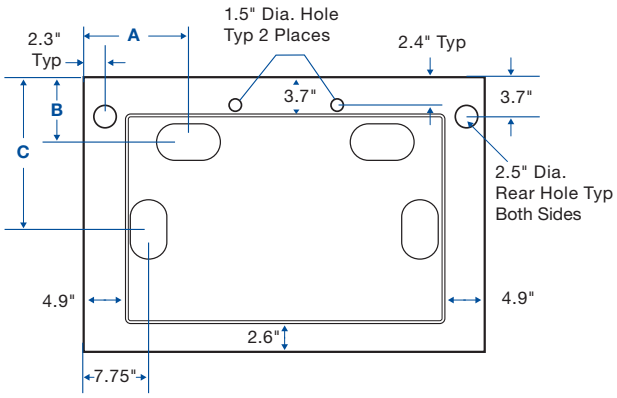

FRONT

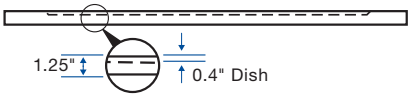

Hood Depth	Work Surface Depth	A	B	C
31.7" depth	30.0"	9.5"	4.6"	18.8"
37.7" depth	36.0"	12.5"	7.3"	19.0"

4005200—Oval Polypropylene Cupsink. Mounts in work surface with cutout, 3.0" x 6.0". 1.5" National Pipe Straight Mechanical (NPSM) thread. Shipping weight 4 lbs. (2 kg)

*Not compatible with Protector Solvent Storage Cabinets.

GreenFumeHood® Technology by Erlab®

Features & Benefits

Neutrodine® Unisorb
Filtration technology for general chemistry, with large retention capability.

Energy savings
Reduces energy costs by 96% and operating costs by 70%.

Cost savings
Reduces installation costs and infrastructure costs for HVAC.

Reduce CO_2 emissions
Zero-emission design provides maximum environmental protection.

Optimized lab design
Streamlined infrastructure for a dynamic sustainable building plan.

Smart communication technology
Built-in connectivity with access to real-time safety settings via smartphone.

Adaptable design
Filtration columns are quick and simple to reconfigure to meet requirement changes.

Quick and simple relocation
Ductless design allows for maximum flexibility.

Adaptable modular filtration columns

Chemical vapors

Airflow ↑

- Neutrodine® Unisorb
- Fan
- Neutrodine® Unisorb
- Light

Chemical vapors with particulates

Airflow ↑

- Neutrodine® Unisorb
- Fan
- Neutrodine® Unisorb
- HEPA H14
- Light

Chemical vapors for cleanrooms

Airflow ↑

- HEPA H14
- Neutrodine® Unisorb
- Fan
- Neutrodine® Unisorb
- Light

Energy saver

NOTE: HEPA filters add 3.5" to overall height.

Neutrodine® Unisorb Filters

Neutrodine® Unisorb

Ventilation Module

HEPA H14

GreenFumeHood® Technology

Neutrodine® Unisorb Modules

Unique formulation allows for simultaneous capture of solvents, acids, and bases. A secondary module provides an additional level of safety and prevents release of pollutants into the lab

Ventilation Module

Maintains safe airflow while reducing energy consumption and noise output

Optional HEPA Module

99.995% (H14) high efficiency particulate air filter for use with particulate-containing applications or when installed in cleanrooms (adds 3.5" to overall height)

LED Lighting Module

Also holds the prefilter

Filter Installation Requirements: New & Replacement

Hood Width	Filter Columns	Neutrodine Unisorb (New Hood)	Neutrodine Unisorb (Replacement)	Total Neutrodine Unisorb Filter Media Weight**	Optional HEPA Filters	Total HEPA Filter Weight
3'	1	2	1	50 lbs.	1	10 lbs.
4'	2	4	2	100 lbs.	2	20 lbs.
5'	3	6	3	150 lbs.	3	30 lbs.
6'	3 or 4*	8	4	200 lbs.	4	40 lbs.
8'	5	10	5	250 lbs.	5	50 lbs.
		Initial quantity order of 9577420	Replacement order quantity of 9577420		Initial and replacement order quantity of 9577421	

*6' Floor-Mounted Filtered Fume Hood uses 3 filter columns.

**Filter media is the total number of filters required for operation per hood width.

Accessories & Filters

9577420—Neutrodine® Unisorb Filter. Molecular carbon, 1 each. Shipping weight 50 lbs. (22 kg)

9577421—HEPA Filter. 99.995% efficient, H14 type, 1 each. Adds 3.5" to overall height. Shipping weight 25 lbs. (11 kg)

9577423

Replacement Prefilters. Shipping weight 5 lbs. (2 kg)

9577422—Standard.

9577423—Acid.

9577424—Ammonia.

9577433

Replacement Sensors. Replacement required approximately every two years.

9577433—Acid.

9577434—Formaldehyde.

Sash Opening Reduction Wing Kits. Wings reduce sash opening area to increase face velocity to 100 FPM at the 16" sash stop position. Hinged with detents to maintain open position for loading and closed position for normal operation. For use with Echo Benchtop Filtered Fume Hoods. Shipping weight 5 lbs. (2 kg)

9584904—For 4' Echo. Sash opening (w x h): 18" x 16". 100 fpm. Sash wing width: 10"

9584905—For 5' Echo. Sash opening (w x h): 26" x 16". 100 fpm. Sash wing width: 12"

9584906—For 6' Echo. Sash opening (w x h): 34" x 16". 100 fpm. Sash wing width: 14"

9584908—For 8' Echo. Sash opening (w x h): 48" x 16". 100 fpm. Sash wing width: 19"

Contact Labconco for ordering information on electrical duplex receptacles, service fixtures and other accessories.

Echo™ and **Airo**™ Benchtop Filtered Fume Hoods

Specifications

All models feature:

- ❇ Eco-Foil™ air foil with aerodynamic Clean-Sweep™ airflow openings*
- ❇ Cord-Keeper™ Slots on left and right side of air foil
- ❇ Removable front and side panels, and front and interior service access panels (except side window models) for access to plumbing and electrical wiring
- By-pass airflow design
- Glacier white powder-coated steel exterior
- Chemical-resistant, fiberglass-reinforced, composite panel liner
- Pre-wired vapor-proof LED lights for up to 63 footcandles rated for 50,000 hours
  - 2 lights per 4' model
  - 3 lights per 5' model
  - 4 lights per 6' model
  - 5 lights per 8' model
- eGuard software communication
- Smart control command module with wifi, bluetooth and ethernet connectivity
- Neutrodine® Unisorb Filters compatible with over 700 chemicals
- Factory-installed command module, fan button and light button
- Roughing prefilter, 2 each per 4' model, 3 each per 5' model, 4 each per 6' model, and 5 each per 8' model
- Built-in exhaust fans: 2 each per 4' model, 3 each per 5' model, 4 each per 6' model, and 5 each per 8' model, to maintain 60 fpm face velocity at 16" sash opening height*
- Sound pressure of <60 dB(A) with sash at operating height and <48 dB(A) with sash closed
- Sensor package for primary filter breakthrough of solvent fumes (acid/formaldehyde optional), face velocity, temperature and RH
- Audible/visual alarms for breakthrough detection, temperature ≥40° C (104° F), fan failure and low face velocity, high RH. At ≥60° C (140° F), all fans stop
- Power cord with plug to power the Smart control command module, fans and lights. Included junction box to route wiring for any additional electrical such as duplexes

Airo models also feature:

- ❇ Single piece, tempered safety glass vertical-rising sash with cable pulley, sash weight and powder-coated aluminum sash handle and tracks with airflow openings. Sash stop at 13" sash opening height on 3' models and 16" sash opening height on 4' models. Sash opens to 26" high for loading
- Factory-prepared for up to two electrical duplex receptacles and six service fixtures
- 28.5" high sightline between the work surface and header panel

❇ Labconco exclusive feature

Echo models also feature:

- ❇ Single piece, tempered safety glass vertical-rising sash with cable pulley, sash weight and powder-coated aluminum sash handle and tracks with airflow openings. Sash stop at 16" sash opening height. Sash opens to 28" high for loading
- Factory-prepared for up to four electrical duplex receptacles and eight service fixtures
- 37.5" high sightline between the work surface and header panel

Side and back window Echo models may also feature:

- Right and left side-mounted tempered safety glass windows, 15.0" wide x 26.5" high
- Rear tempered safety glass window, 32.4" high
  - 4' model: 27.9" wide
  - 5' model: 36.9" wide
  - 6' model: 49.9" wide
  - 8' model: 66.9" wide

Fixtured models may also feature:

- Two pre-plumbed service fixtures with forged brass valves, lower right side with brass tubing for gas and lower left side with copper tubing for cold water. Components for converting either or both fixtures to air and vacuum are provided. Inlet tubing is not provided
- One pre-wired GFCI electrical duplex receptacle on lower right side and, on 8' models only, one additional pre-wired GFCI electrical duplex receptacle on the lower left side

Standards conformance & regulations:

- SEFA 9, DH III
- SEFA 8, Cabinet Surface Finish Tests
- Modified ASHRAE 110
- ANSI Z9.5
- AFNOR NF-X 15-211
- ASTM E84-09C
- UL Standard 61010-1
- CAN/CSA C22.2 No. 61010-1

⚠ **WARNING:** Cancer—P65Warnings.ca.gov (California only)

Options include:

- HEPA filter (adds 3.5" to overall height)
- Sash opening wing reduction kits. See page 16
- Region-specific electrical plug configurations
- Service fixtures

All models require (not included):

- Neutrodine® Unisorb, or HEPA Filters on HEPA-only models. See pages 15-16
- Work surface. See page 13
- Base cabinet or stand. Contact Labconco

Echo™ Floor-Mounted Filtered Fume Hoods

Specifications

All models feature:

- ❇ Single piece, tempered safety glass vertical-rising sashes with cable pulley, sash weight and powder-coated aluminum sash handle and tracks with Clean-Sweep™ airflow openings. Upper sash stop at 52" sash open height from floor. Upper sash chemical loading opening of 25.2". Lower sash opens up from floor to 55.2" for transporting carts, drums and apparatus
- ❇ Removable front and side panels, and front and interior service access panels for access to plumbing and electrical wiring
- eGuard software communication
- Smart control command module with wifi, bluetooth and ethernet connectivity
- Neutrodine® Unisorb Filters compatible with over 700 chemicals
- Factory-installed command module, fan button and light button
- Rear baffle
- By-pass airflow design
- Glacier white powder-coated steel exterior
- Chemical-resistant, fiberglass-reinforced, composite panel liner
- Pre-wired vapor-proof LED lights for up to 63 footcandles rated for 50,000 hours
  - 2 lights per 4' model
  - 3 lights per 5' and 6' model
  - 5 lights per 8' model
- Factory-prepared for up to four electrical duplex receptacles and eight service fixtures
- Roughing prefilter, 2 each per 4' model, 3 each per 5' and 6' models, and 5 each per 8' model
- Built-in exhaust fan(s) to maintain 60 fpm face velocity with only an upper sash working opening of 13.2"
  - 4' models: 2 each
  - 5' and 6' models: 3 each
  - 8' models: 5 each
- Sound pressure of <60 dB(A) with sash at operating height and <48 dB(A) with sash closed
- Sensor package for primary filter breakthrough of solvent fumes (acid/formaldehyde optional), face velocity, temperature and RH
- Audible/visual alarms for breakthrough detection, temperature ≥40° C (104° F), fan failure and low face velocity, high RH. At ≥60° C (140° F), all fans stop
- Power cord with plug to power the Smart control command module, fans and lights. Included junction box to route wiring for any additional electrical such as duplexes

Fixtured models may also feature:

- Two pre-plumbed service fixtures with forged brass valves, lower right side with brass tubing for gas and lower left side with copper tubing for cold water. Components for converting either or both fixtures to air and vacuum are provided. Inlet tubing is not provided
- One pre-wired GFCI electrical duplex receptacle on lower right side and, on 8' models only, one additional pre-wired GFCI electrical duplex receptacle on the lower left side

Standards conformance & regulations:

- SEFA 9, DH III
- SEFA 8, Cabinet Surface Finish Tests
- Modified ASHRAE 110
- ANSI Z9.5
- AFNOR NF-X 15-211
- ASTM E84-09C
- UL Standard 61010-1
- CAN/CSA C22.2 No. 61010-1

⚠ **WARNING:** Cancer—P65Warnings.ca.gov (California only)

Options include:

- HEPA filter (adds 3.5" to overall height)
- Region-specific electrical plug configurations
- Service fixtures

All models require (not included):

- Neutrodine® Unisorb, or HEPA Filters on HEPA-only models. See pages 15-16

Contact Labconco for ordering information on electrical duplex receptacles, service fixtures and other accessories.

❇ Labconco exclusive feature

Everything you need to succeed.

Chemical Ventilation

Fume Hoods

Filtered Fume Hoods

Ductless Enclosures

Biological Ventilation

Biosafety Cabinets

Clean Benches

PCR Enclosures

Lab Animal Enclosures

Particulate Enclosures

Powder Containment

Nanotechnology

Glove Boxes

Sample Preparation

Freeze Dryers

Evaporators

Concentrators

Cold Traps

Washers & Water

Glassware Washers

Water Purification Systems

Forensics

Fuming Chambers

Drying Cabinets

Downdraft Powder Stations

Specialized Solutions

Kjeldahl, Fat & Crude Fiber Instruments

Blood Drawing Chairs

Vacuum Desiccators

Lab Accessories & Parts

Vacuum Pumps

Remote Blowers & Exhausters

Filters & Pre-Filters

Glassware

Carts, Tables & Benches

Base Stands, Cabinets & Work Surfaces

Our promise.

You can expect straight talk from us. A fair and honest approach to doing business. And people you can trust to do the right thing.

When you buy equipment from us, it should work the way you need it to, and if it doesn't, we will take care of it.

Taking care of people is how we take care of business.

Visit labconco.com or canadianscientific.ca to request information for all Labconco products.

CANADIAN SCIENTIFIC LAB SYSTEMS INC.

7777 Eastview Rd,
Guelph, ON N1H 6J1

(519) 835-2949 | 226) 500-1414

canadianscientific.ca

LABCONCO CORPORATION

8811 Prospect Avenue
Kansas City, MO 64132

(800) 821-5525 | (816) 333-8811

labconco.com

©2023 Canadian Scientific Lab Systems Inc.

Product design subject to change without notice.

©2022 LABCONCO CORPORATION

Printed in the U.S.A.

09/01/23

LABCONCO®

CSi Canadian Scientific
The Future of Laboratory Design